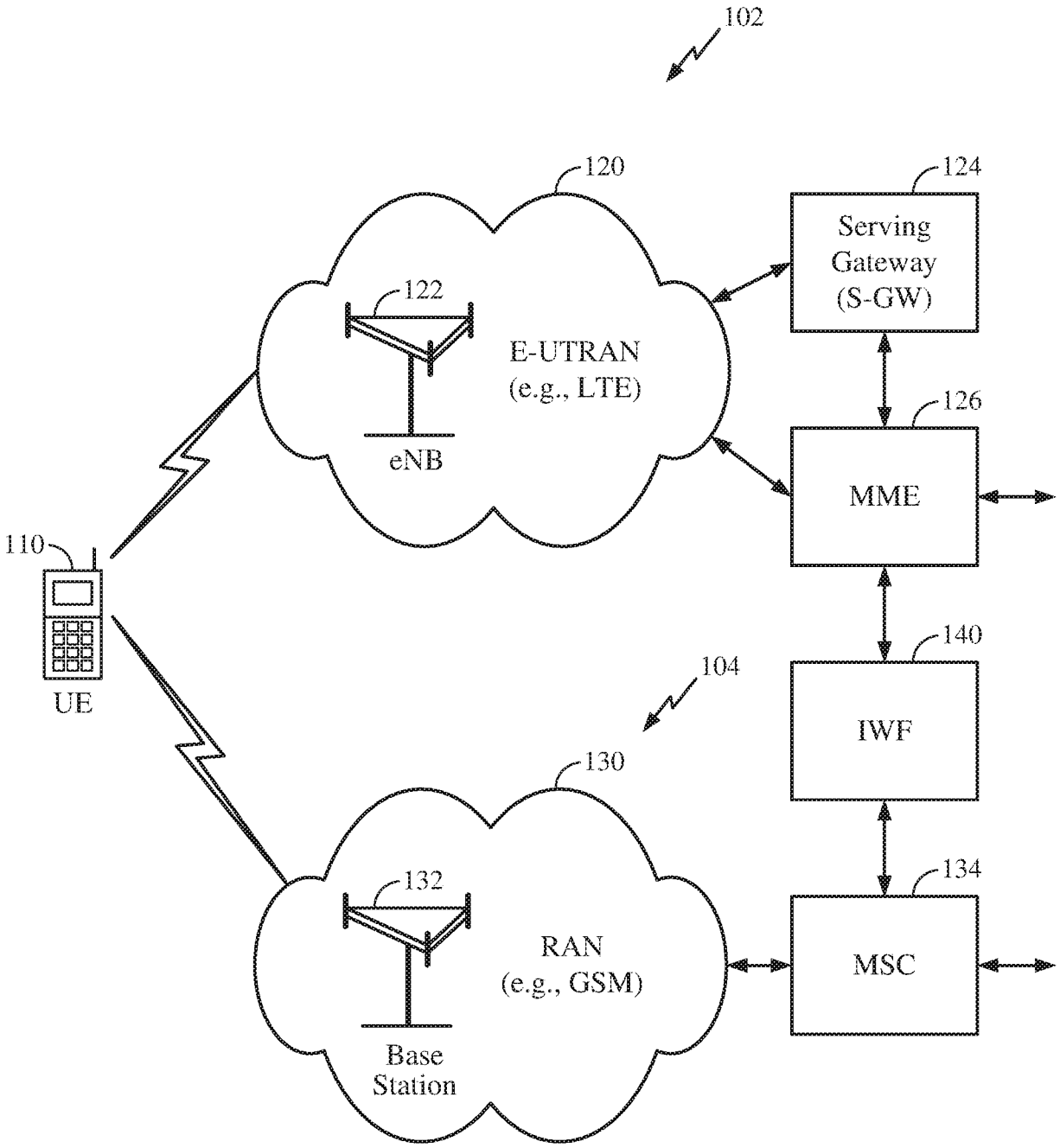
102
120
124
Serving Gateway (S-GW)
122
E-UTRAN (e.g., LTE)
eNB
126
MME
110
UE
140
IWF
104
130
132
RAN (e.g., GSM)
134
MSC
Base Station

FIG. 1

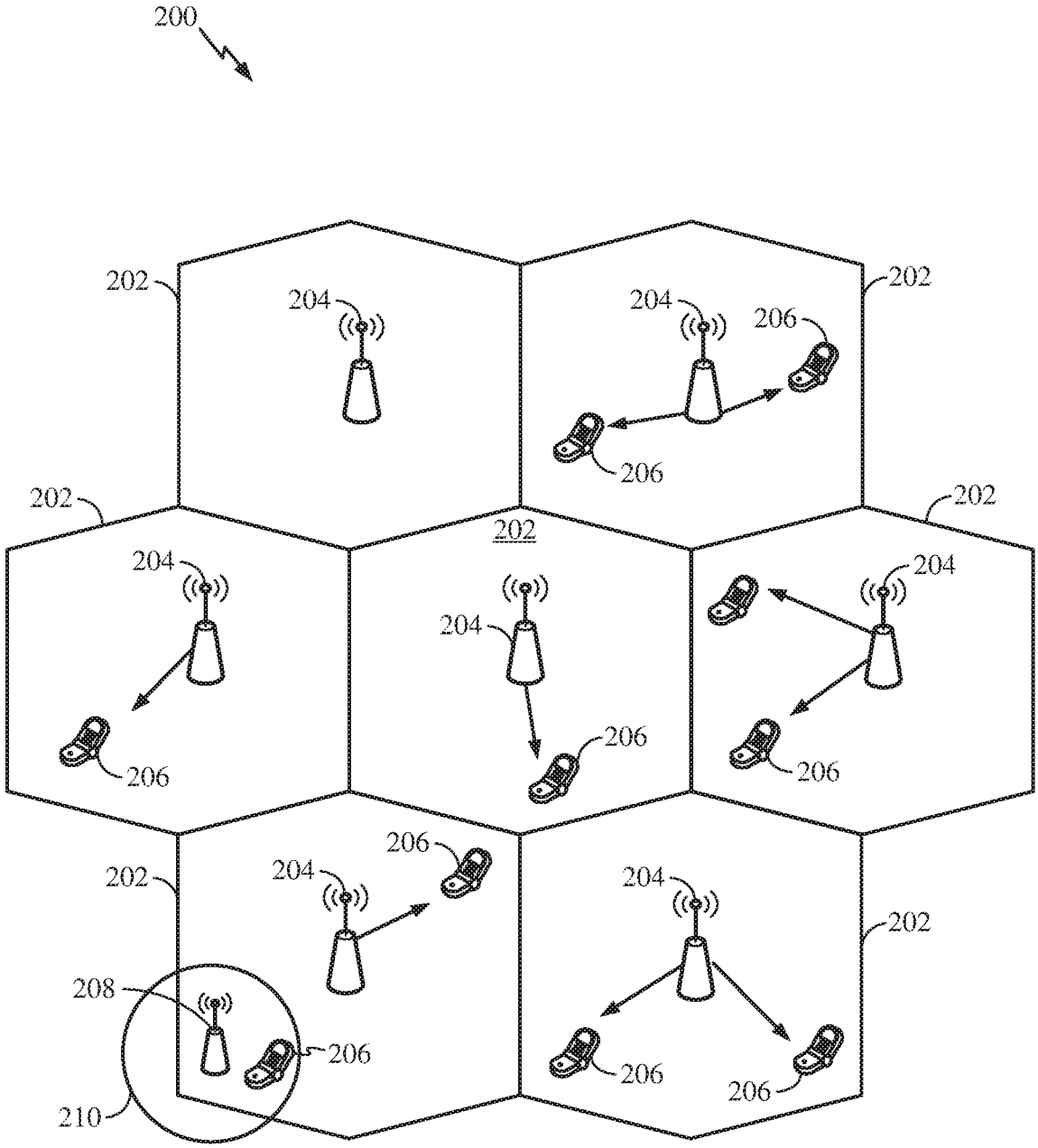

FIG. 2

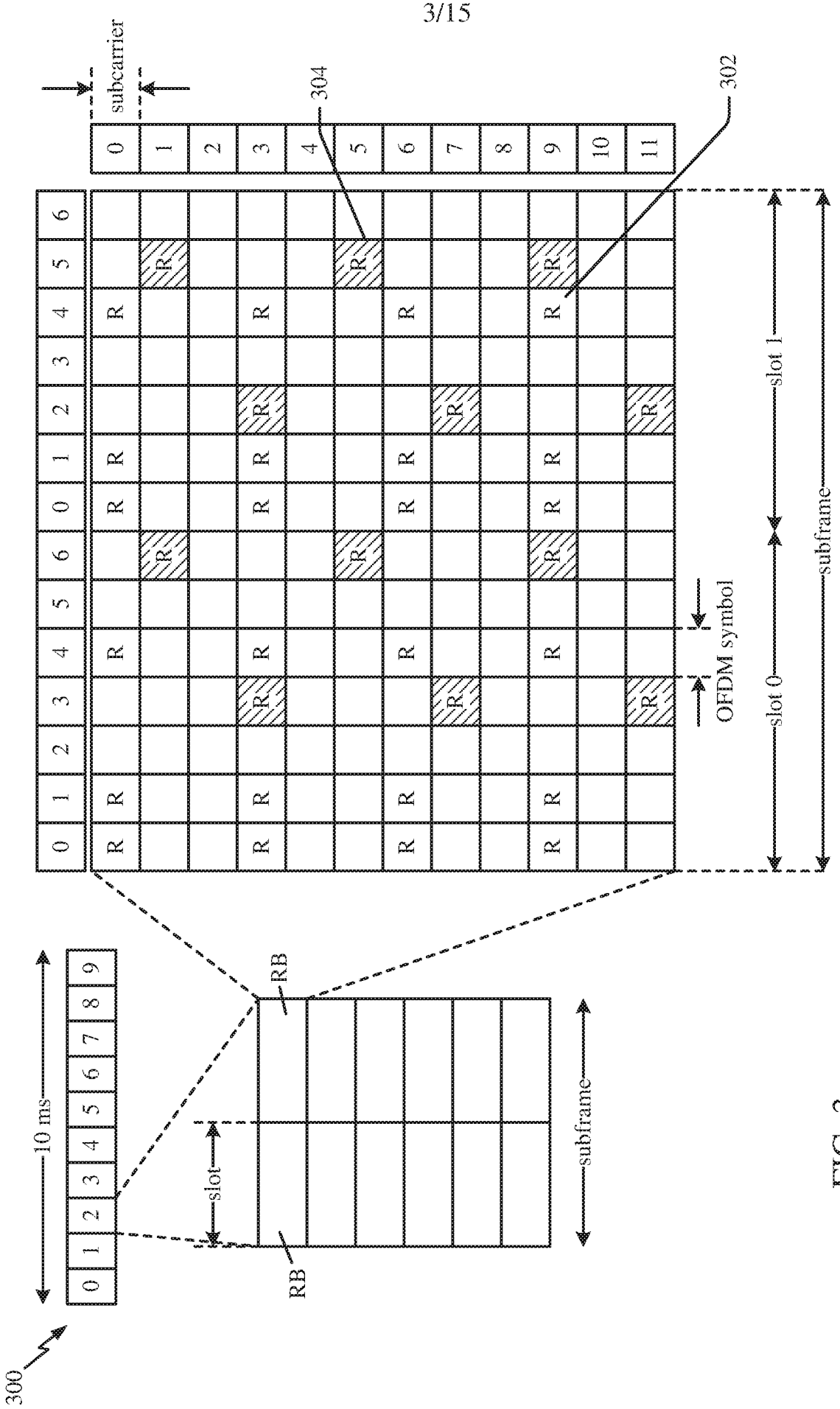
300
10 ms
0 1 2 3 4 5 6 7 8 9
slot
RB
RB
subframe
0 1 2 3 4 5 6 7 8 9 10 11
subcarrier
304
302
OFDM symbol
slot 0
slot 1
subframe

FIG. 3

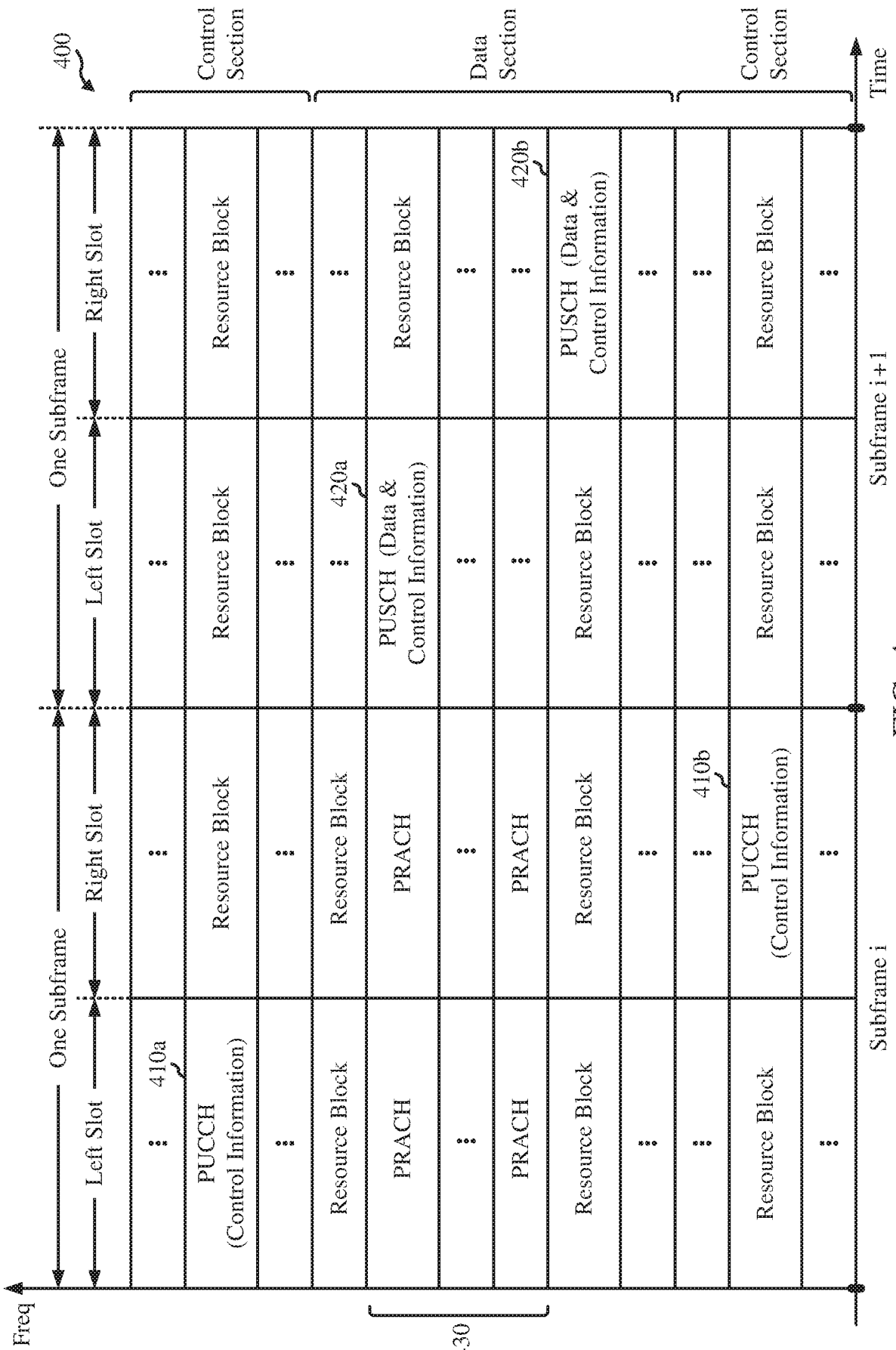
400
Control Section
Data Section
Control Section
One Subframe
One Subframe
Left Slot
Right Slot
Left Slot
Right Slot
Freq
Time
410a
PUCCH (Control Information)
Resource Block
PRACH
420a
PUSCH (Data & Control Information)
420b
PUSCH (Data & Control Information)
410b
PUCCH (Control Information)
430
Subframe i
Subframe i+1

FIG. 4

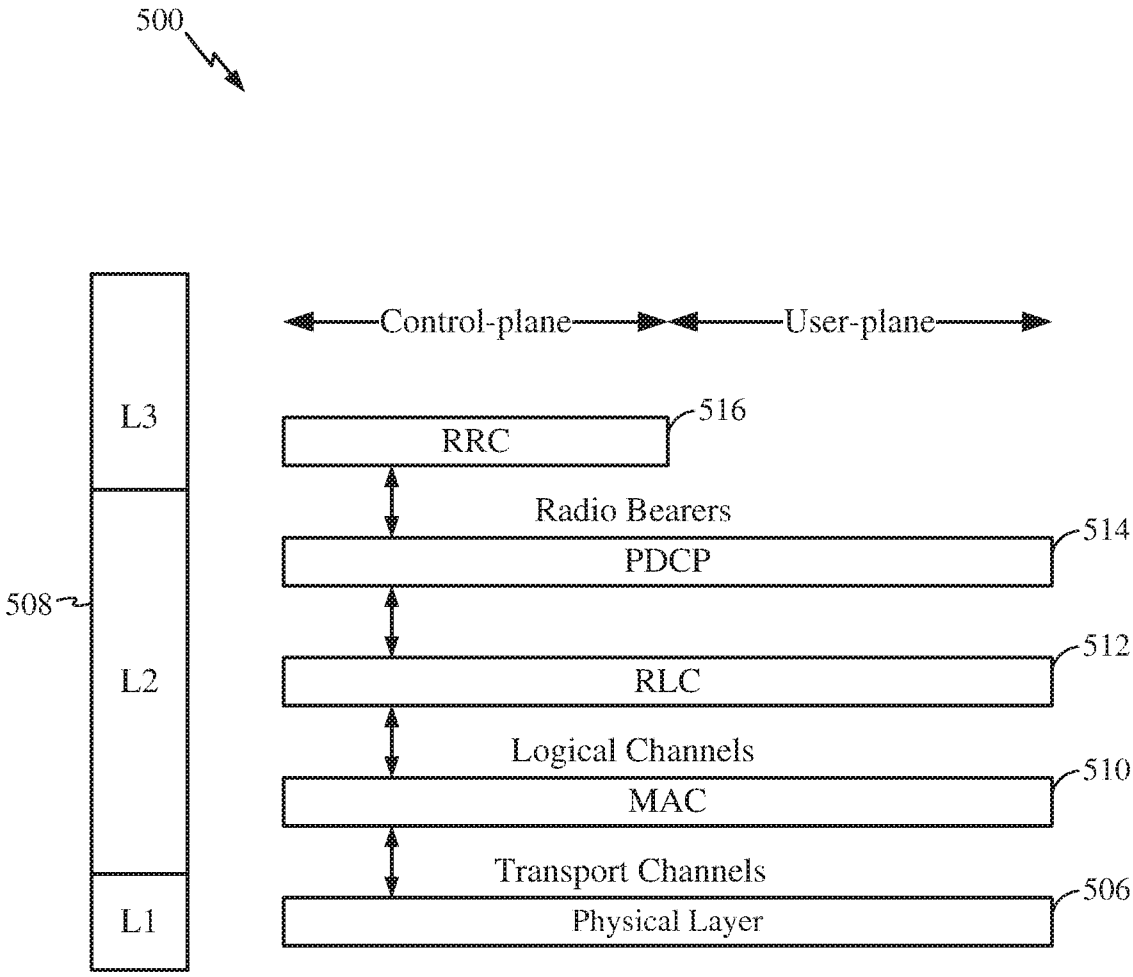
500
L3
L2
L1
508
Control-plane
User-plane
RRC
516
Radio Bearers
PDCP
514
RLC
512
Logical Channels
MAC
510
Transport Channels
Physical Layer
506

FIG. 5

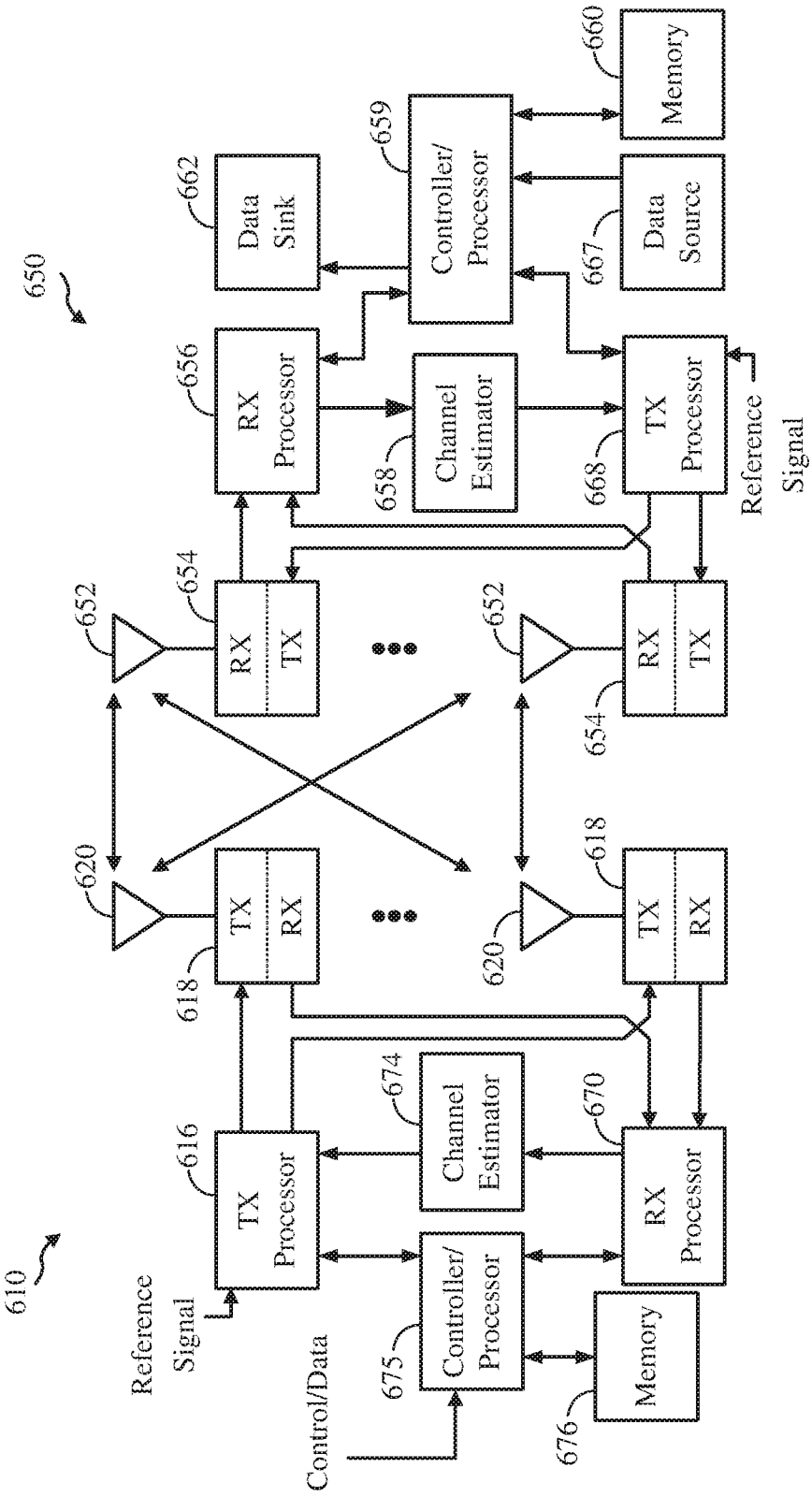
650
610
Data Sink
662
Controller/ Processor
659
Memory
660
Data Source
667
RX Processor
656
Channel Estimator
658
TX Processor
668
Reference Signal
652
654
RX
TX
620
618
TX Processor
616
Channel Estimator
674
670
RX Processor
Controller/ Processor
675
Memory
676
Reference Signal
Control/Data

FIG. 6

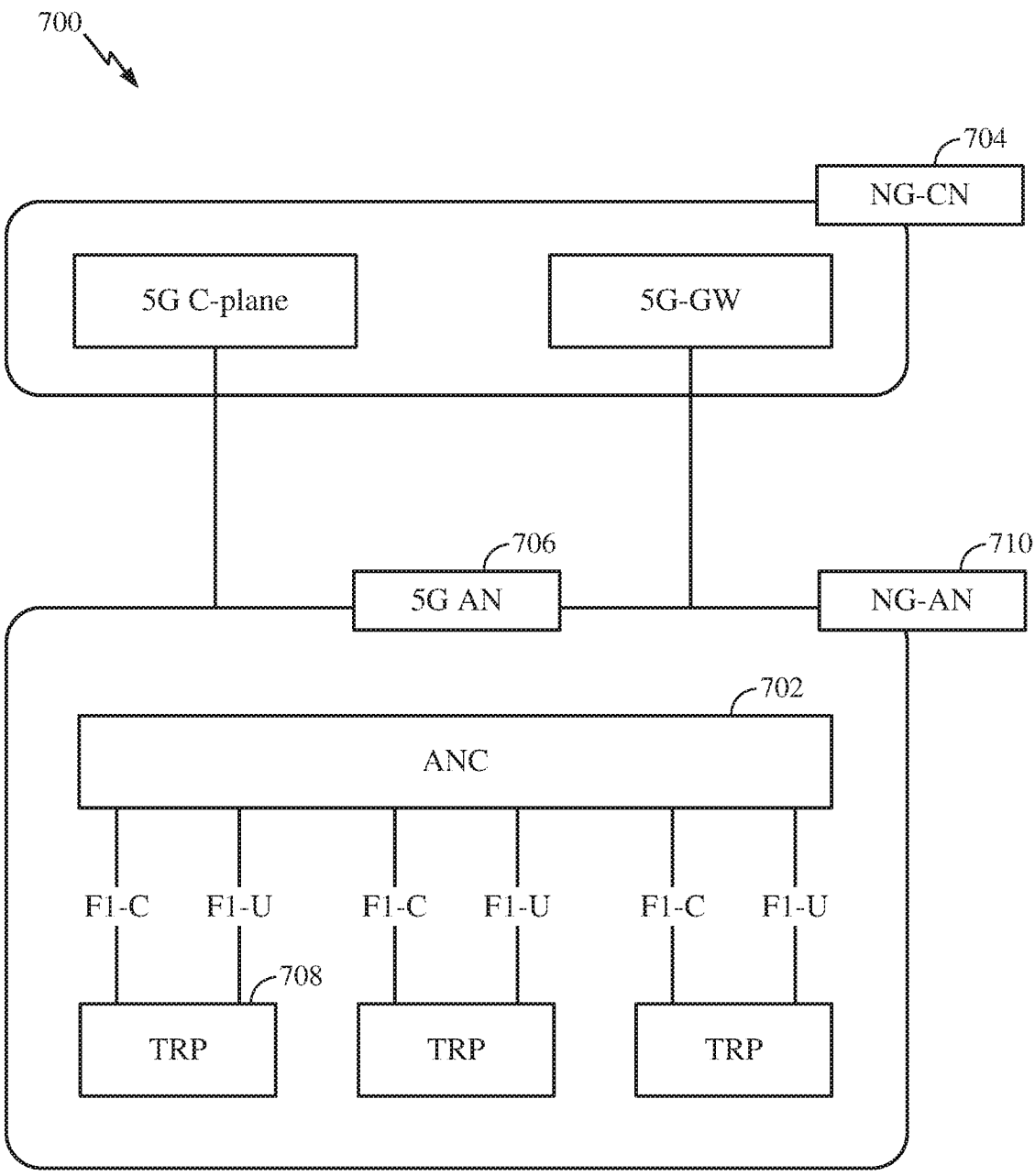
700
704
NG-CN
5G C-plane
5G-GW
706
5G AN
710
NG-AN
702
ANC
F1-C
F1-U
F1-C
F1-U
F1-C
F1-U
708
TRP
TRP
TRP

FIG. 7

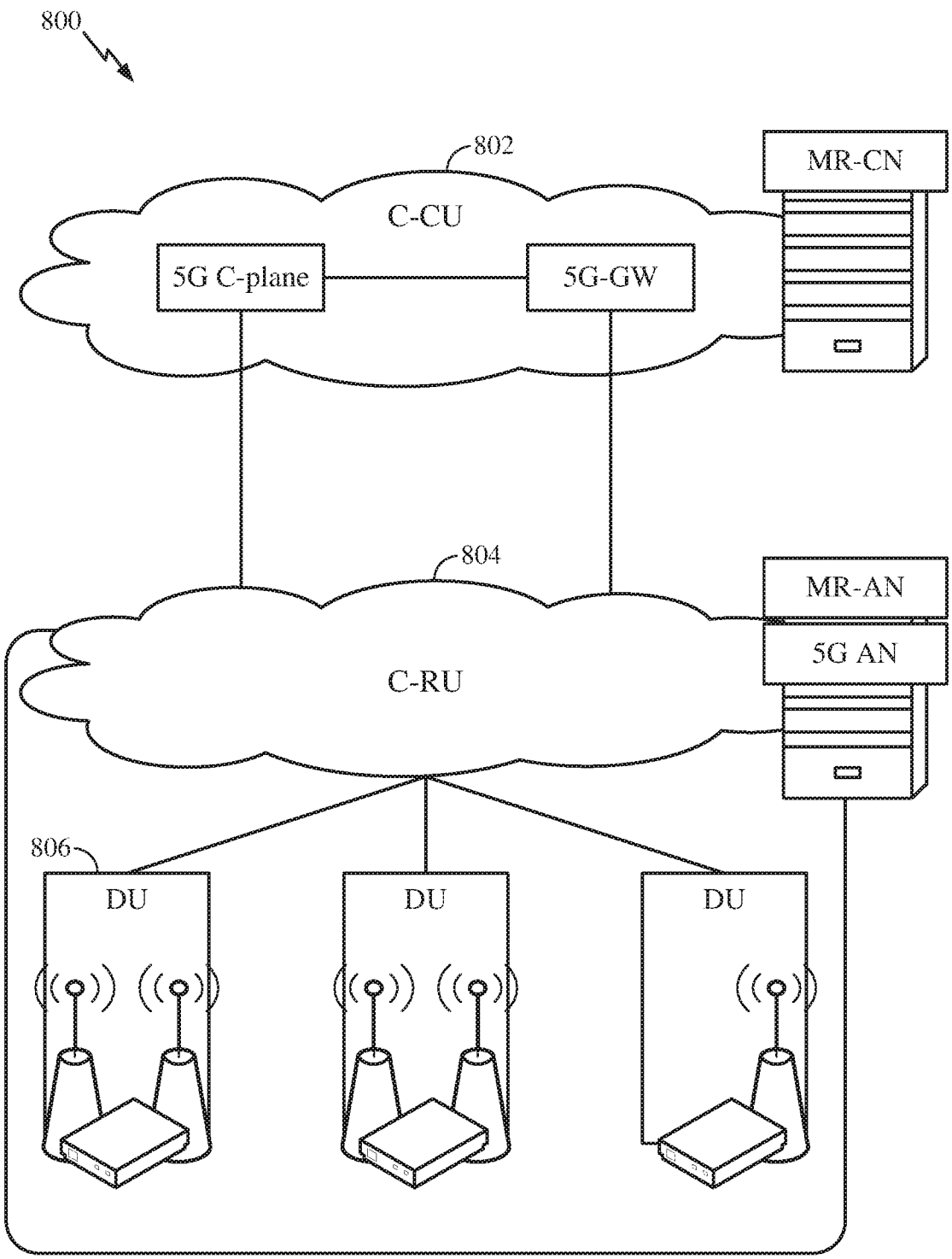

FIG. 8

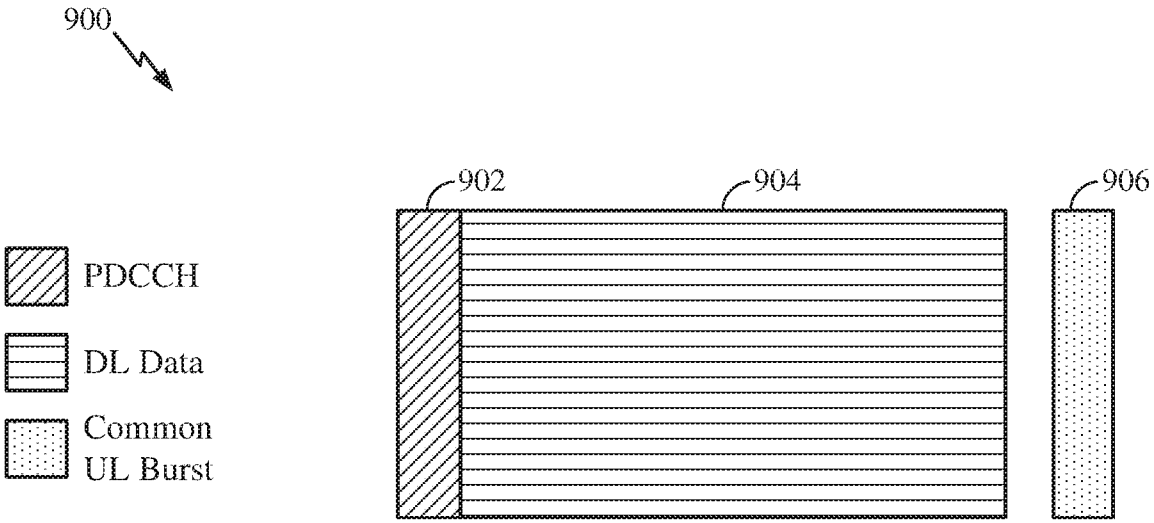
900
902
904
906
PDCCH
DL Data
Common
UL Burst

FIG. 9

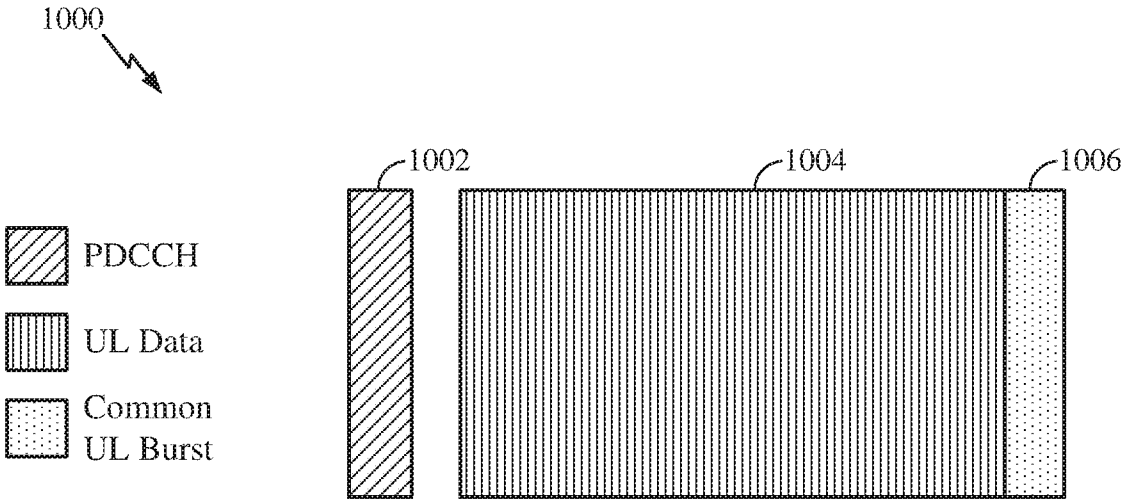
1000
1002
1004
1006
PDCCH
UL Data
Common
UL Burst

FIG. 10

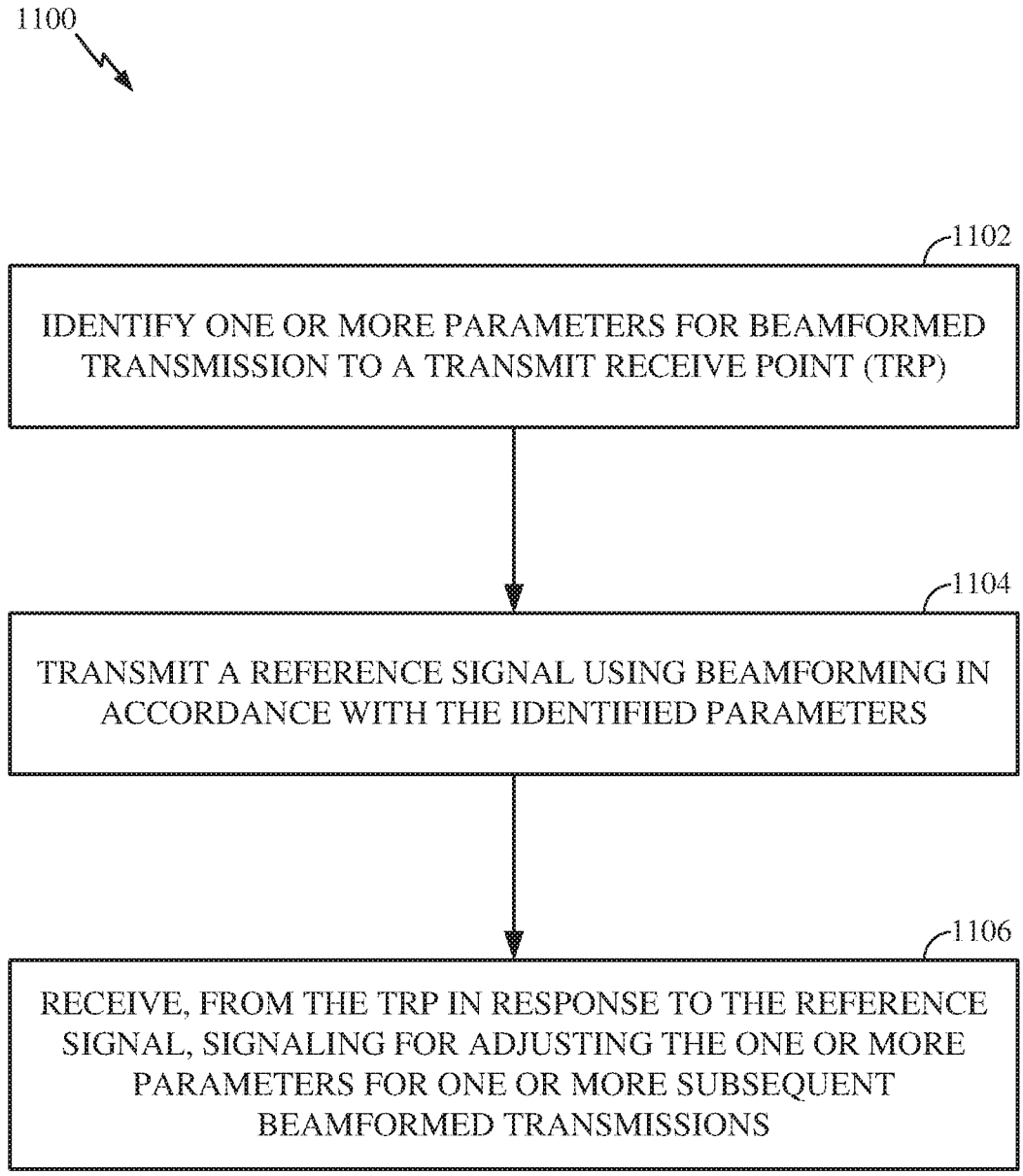
1100
1102
IDENTIFY ONE OR MORE PARAMETERS FOR BEAMFORMED TRANSMISSION TO A TRANSMIT RECEIVE POINT (TRP)
1104
TRANSMIT A REFERENCE SIGNAL USING BEAMFORMING IN ACCORDANCE WITH THE IDENTIFIED PARAMETERS
1106
RECEIVE, FROM THE TRP IN RESPONSE TO THE REFERENCE SIGNAL, SIGNALING FOR ADJUSTING THE ONE OR MORE PARAMETERS FOR ONE OR MORE SUBSEQUENT BEAMFORMED TRANSMISSIONS

FIG. 11

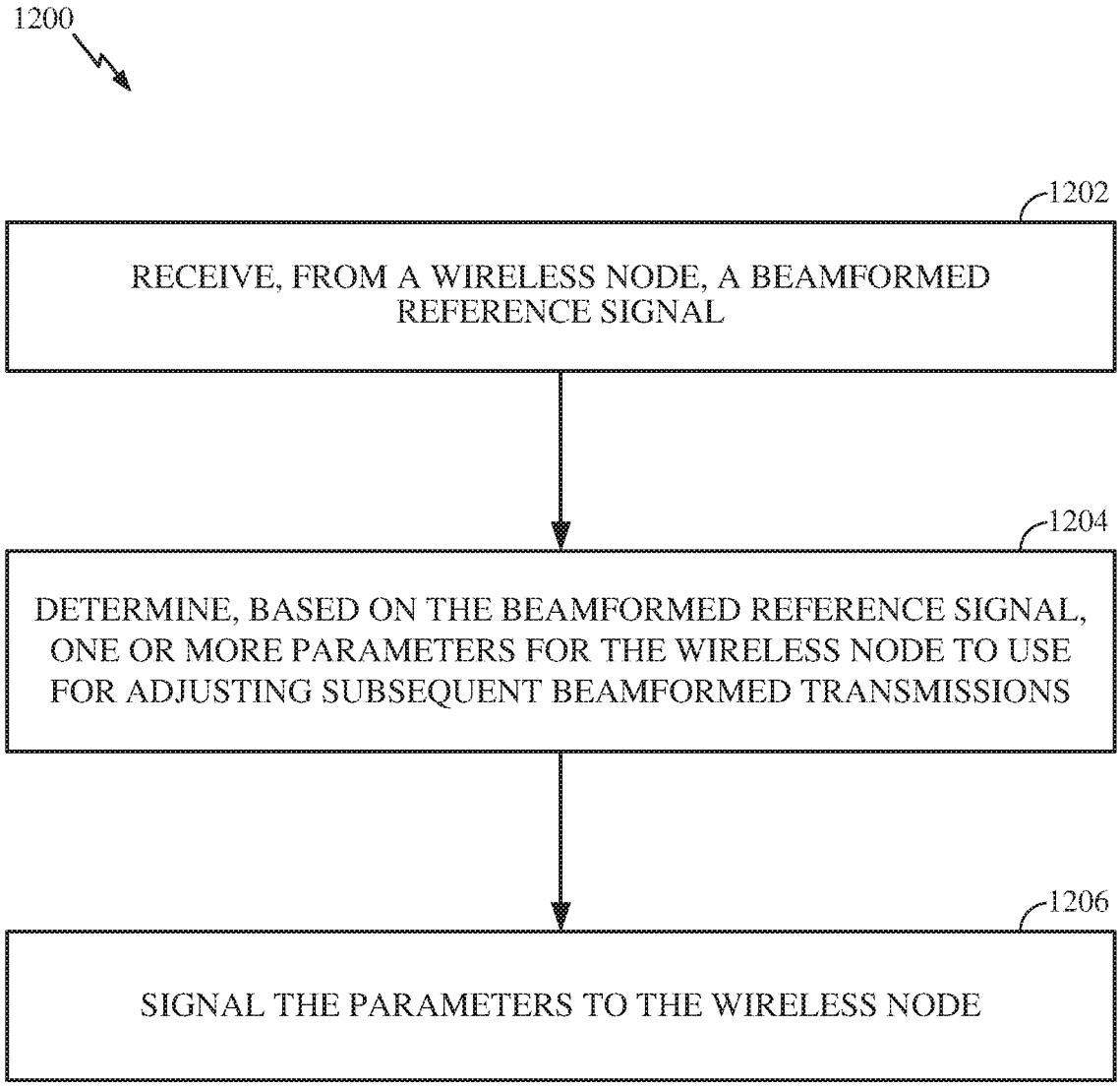
1200
1202
RECEIVE, FROM A WIRELESS NODE, A BEAMFORMED REFERENCE SIGNAL
1204
DETERMINE, BASED ON THE BEAMFORMED REFERENCE SIGNAL, ONE OR MORE PARAMETERS FOR THE WIRELESS NODE TO USE FOR ADJUSTING SUBSEQUENT BEAMFORMED TRANSMISSIONS
1206
SIGNAL THE PARAMETERS TO THE WIRELESS NODE

FIG. 12

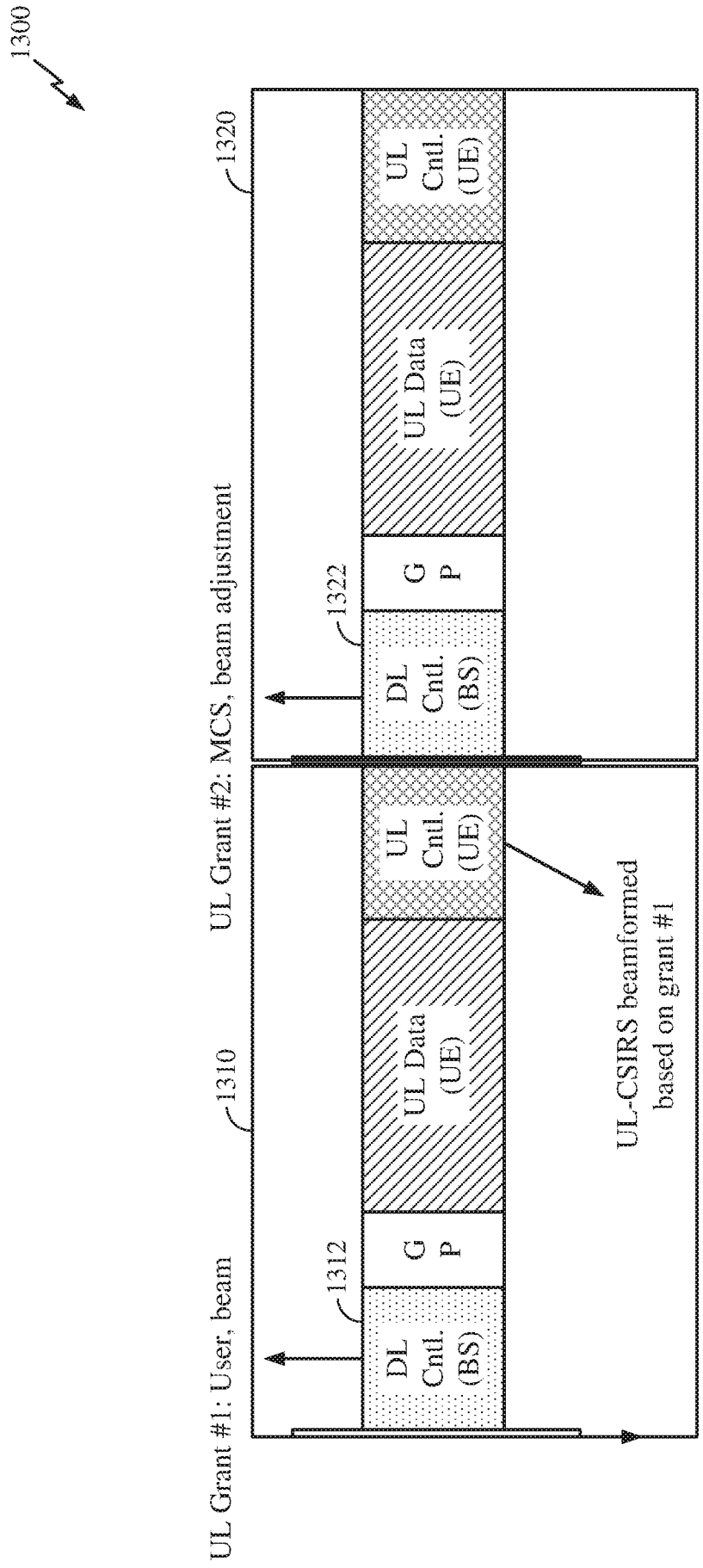
1300
UL Grant #1: User, beam
1310
1312
DL Cntl. (BS)
G P
UL Data (UE)
UL Cntl. (UE)
UL Grant #2: MCS, beam adjustment
1320
1322
DL Cntl. (BS)
G P
UL Data (UE)
UL Cntl. (UE)
UL-CSIRS beamformed based on grant #1

FIG. 13

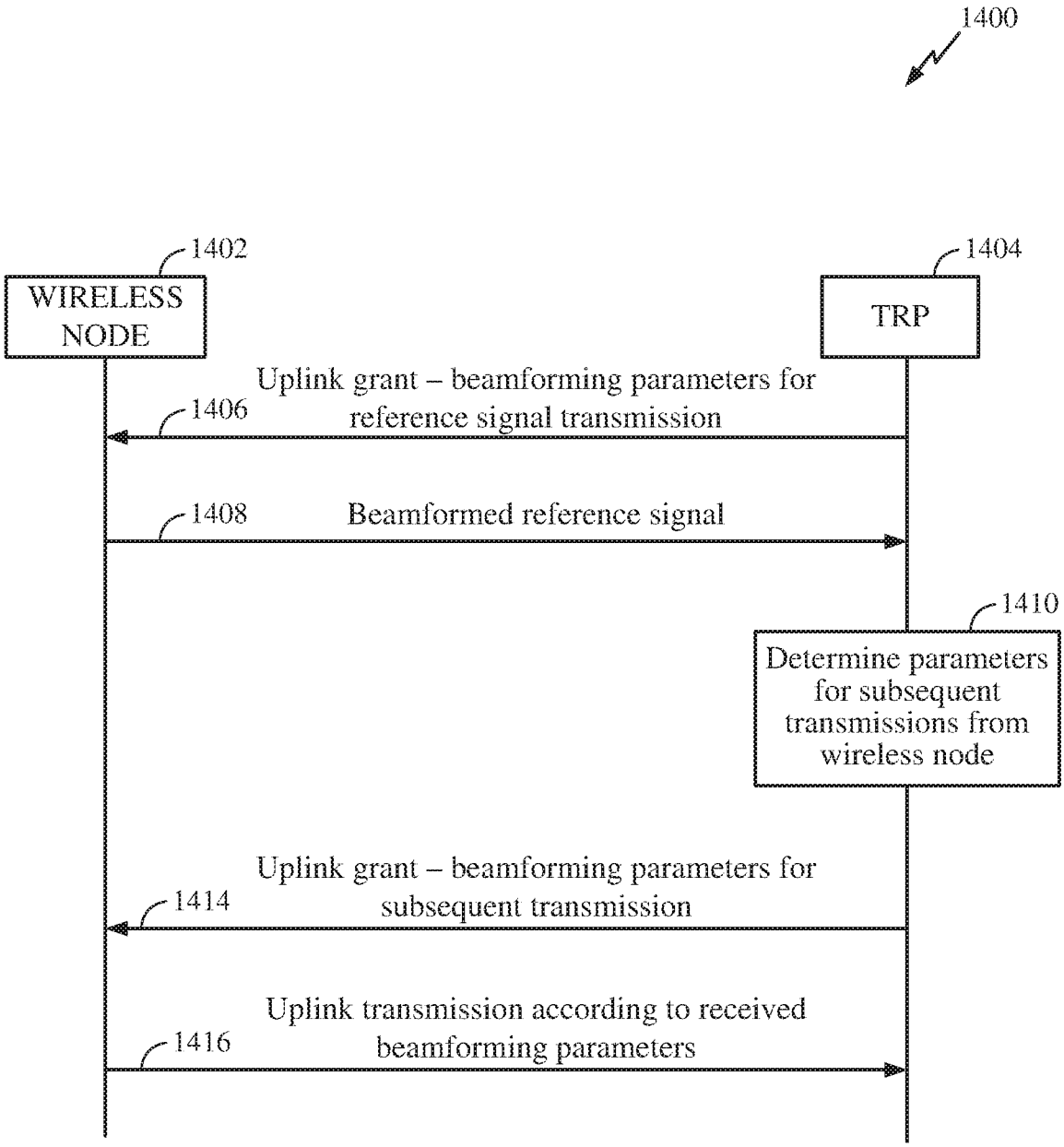
1400
1402
WIRELESS NODE
1404
TRP
Uplink grant – beamforming parameters for reference signal transmission
1406
1408
Beamformed reference signal
1410
Determine parameters for subsequent transmissions from wireless node
Uplink grant – beamforming parameters for subsequent transmission
1414
Uplink transmission according to received beamforming parameters
1416

FIG. 14

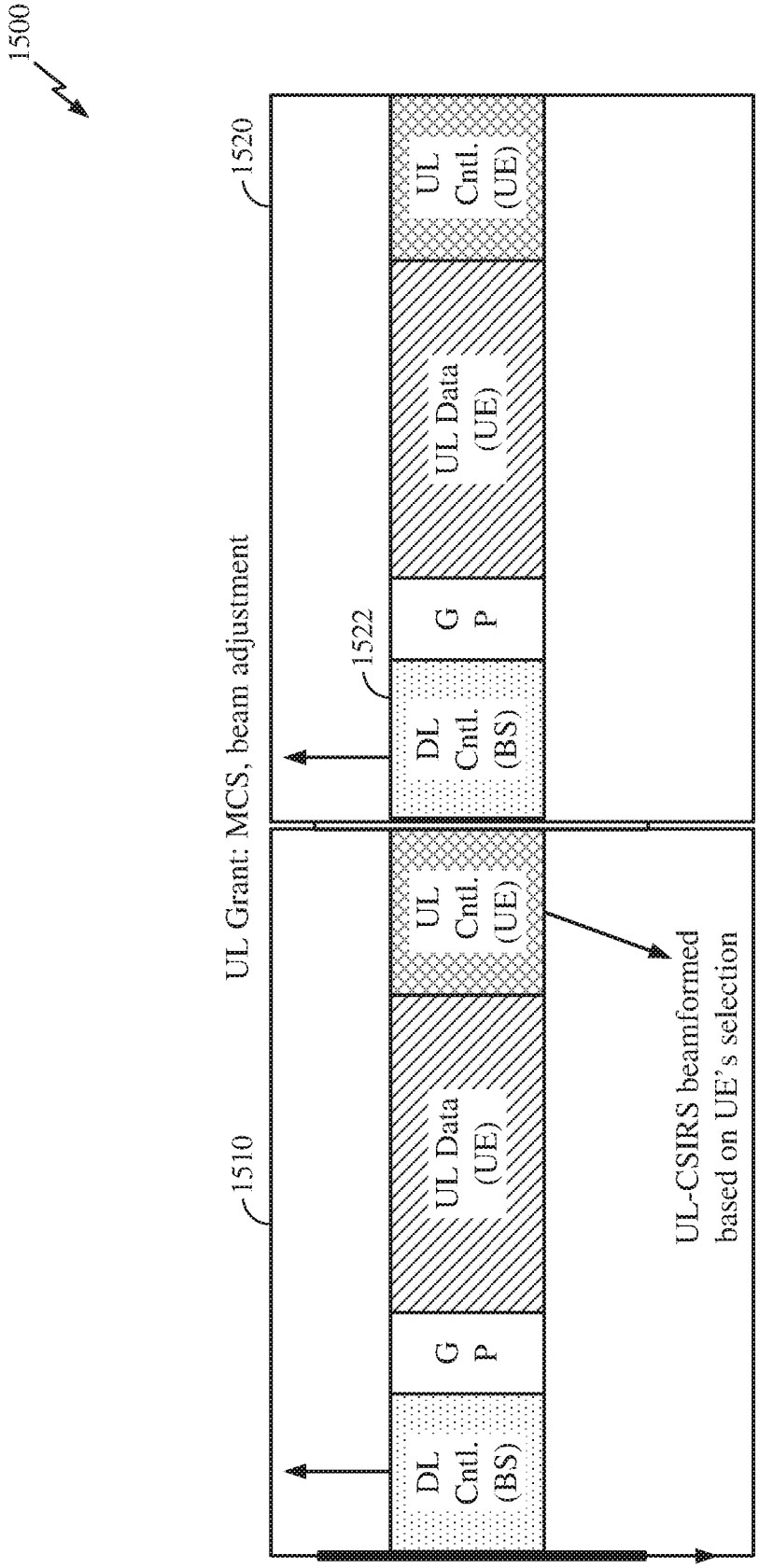
1500
1520
1522
1510
UL Grant: MCS, beam adjustment
DL Cntl. (BS)
G P
UL Data (UE)
UL Cntl. (UE)
UL-CSIRS beamformed based on UE's selection

FIG. 15

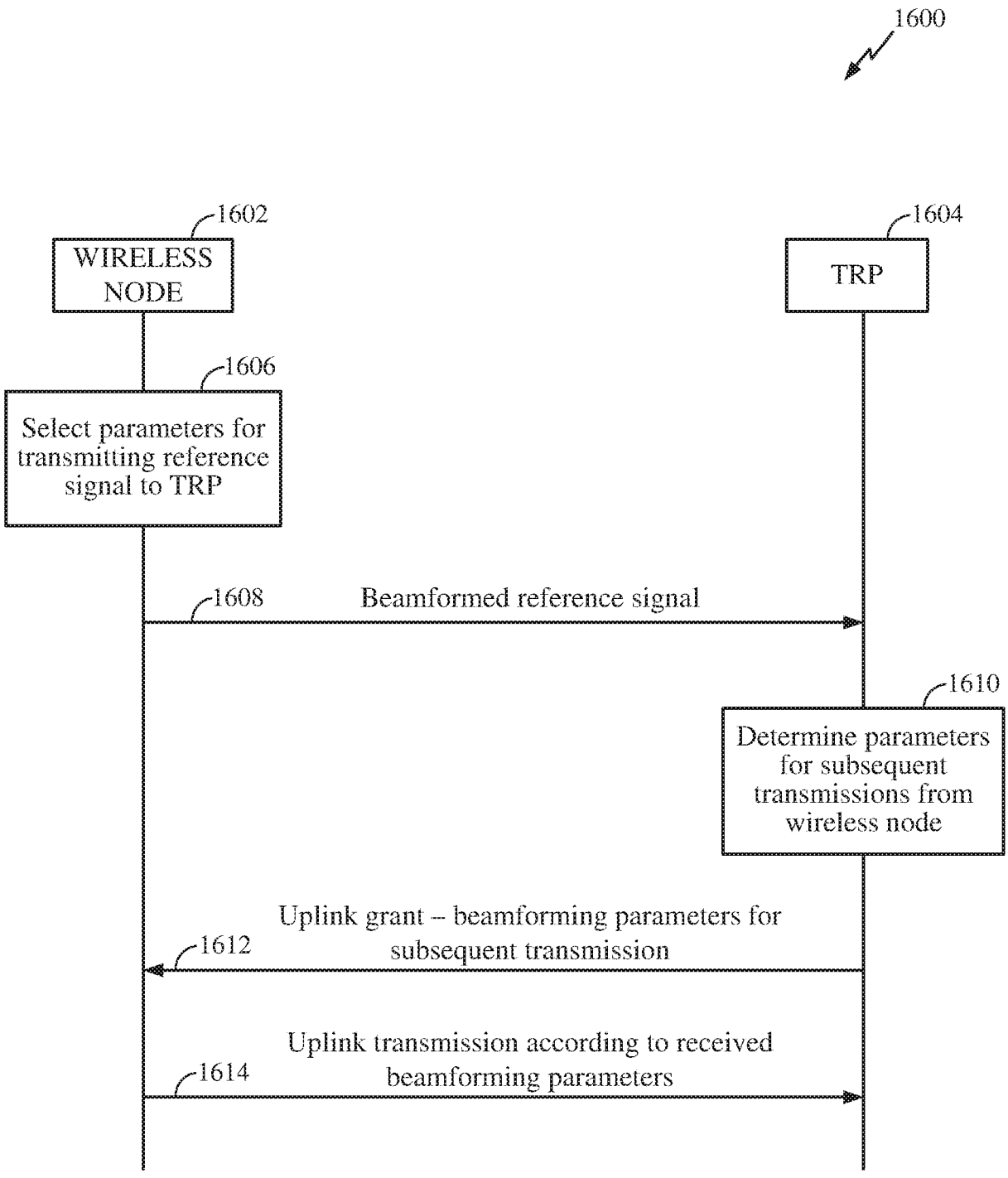
1600
1602
WIRELESS NODE
1604
TRP
1606
Select parameters for transmitting reference signal to TRP
1608
Beamformed reference signal
1610
Determine parameters for subsequent transmissions from wireless node
Uplink grant – beamforming parameters for subsequent transmission
1612
Uplink transmission according to received beamforming parameters
1614

FIG. 16