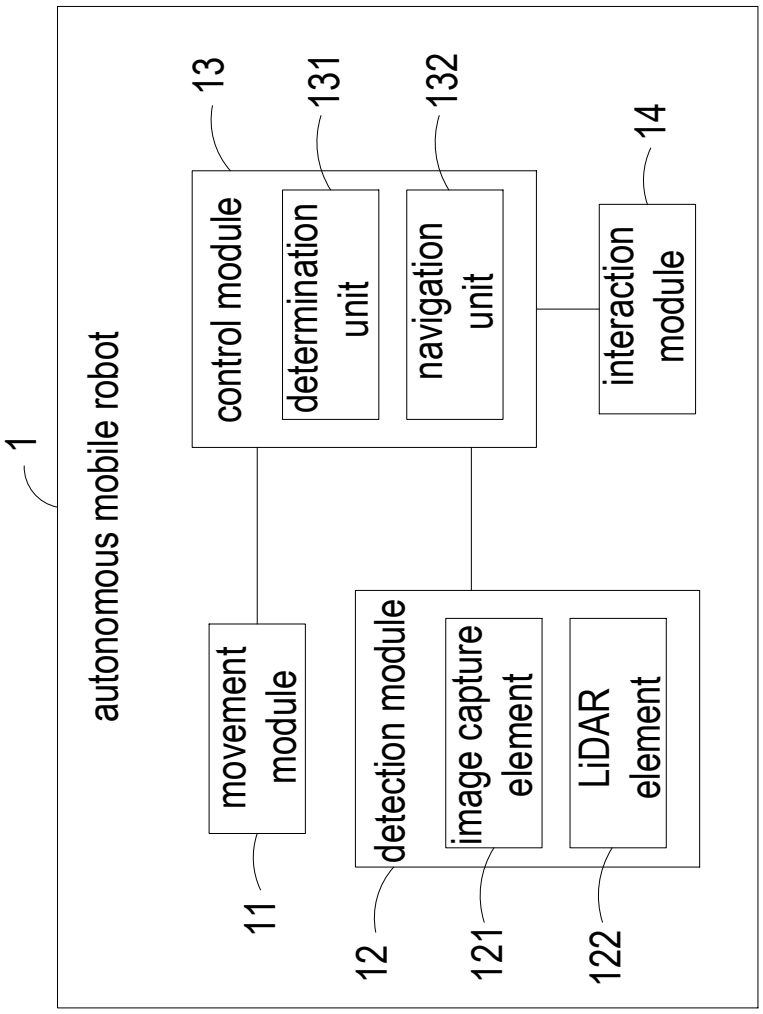
1
autonomous mobile robot
13
control module
131
determination unit
132
navigation unit
14
interaction module
movement module
11
detection module
12
image capture element
121
LiDAR element
122

FIG. 1

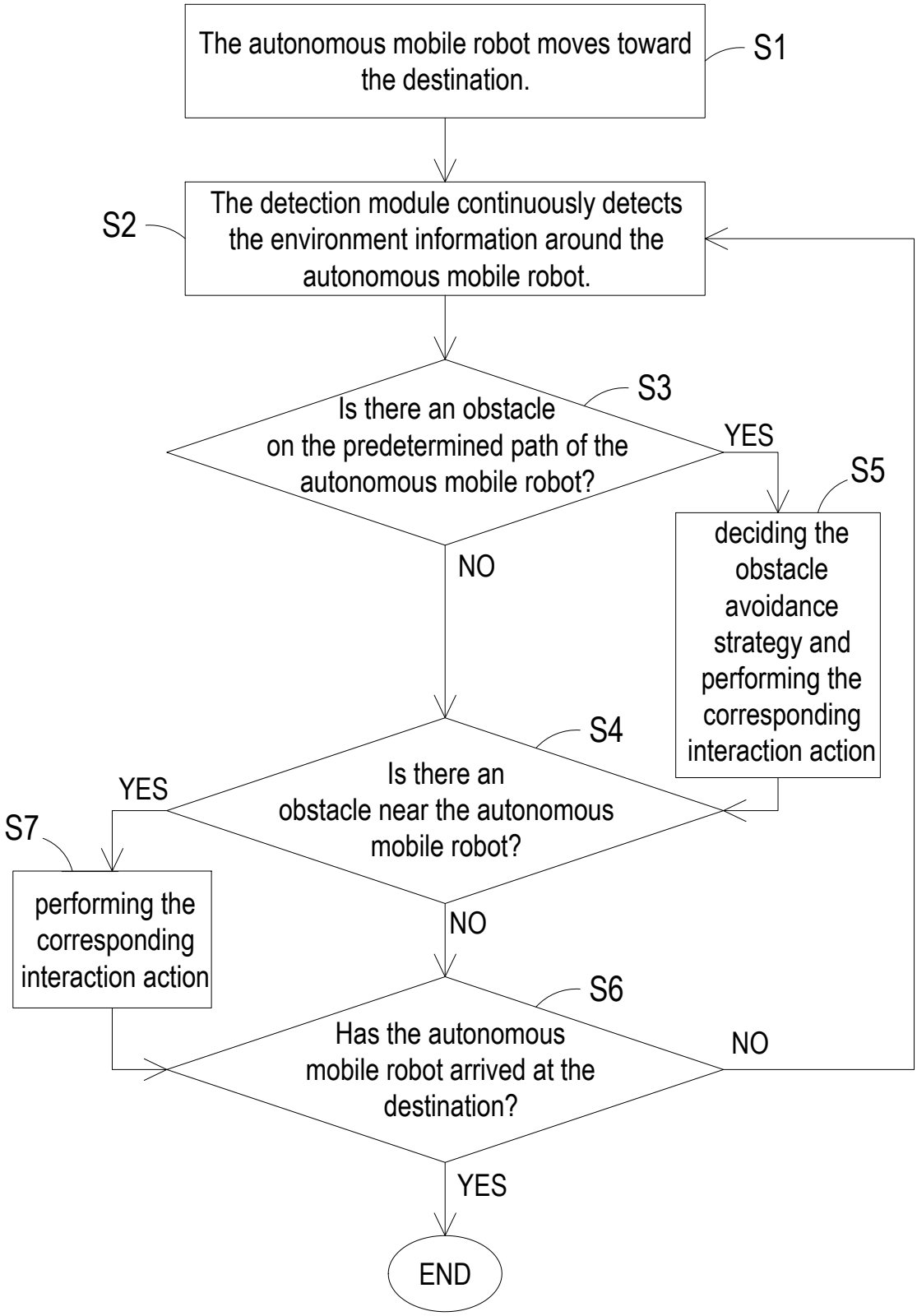
The autonomous mobile robot moves toward the destination.
S1
The detection module continuously detects the environment information around the autonomous mobile robot.
S2
Is there an obstacle on the predetermined path of the autonomous mobile robot?
S3
YES
NO
deciding the obstacle avoidance strategy and performing the corresponding interaction action
S5
Is there an obstacle near the autonomous mobile robot?
S4
YES
NO
performing the corresponding interaction action
S7
Has the autonomous mobile robot arrived at the destination?
S6
NO
YES
END

FIG. 2

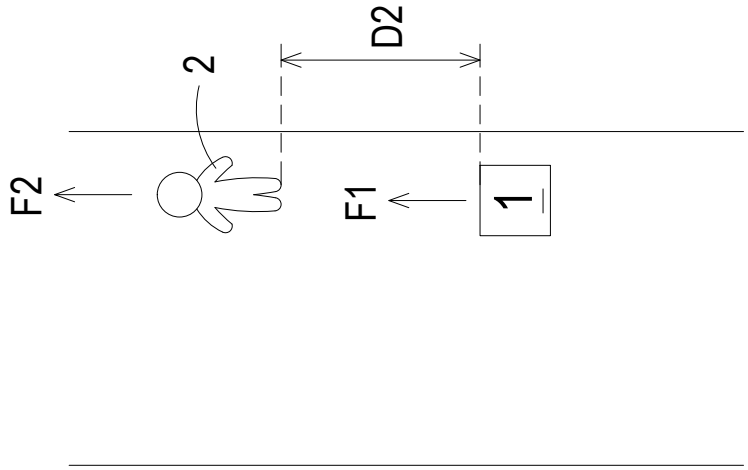

FIG. 4

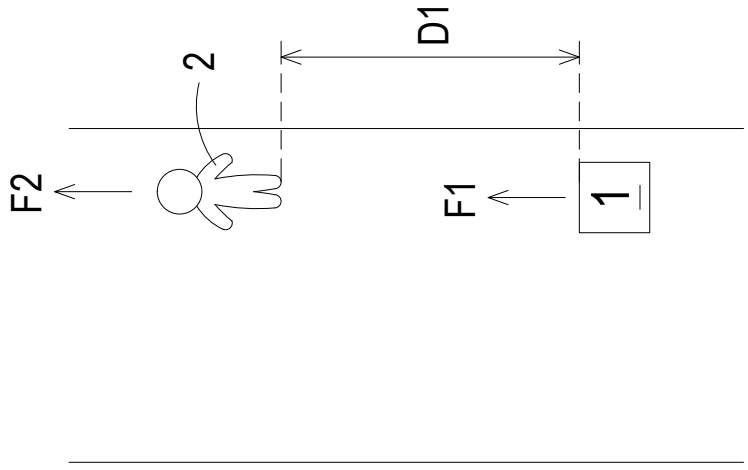

FIG. 3

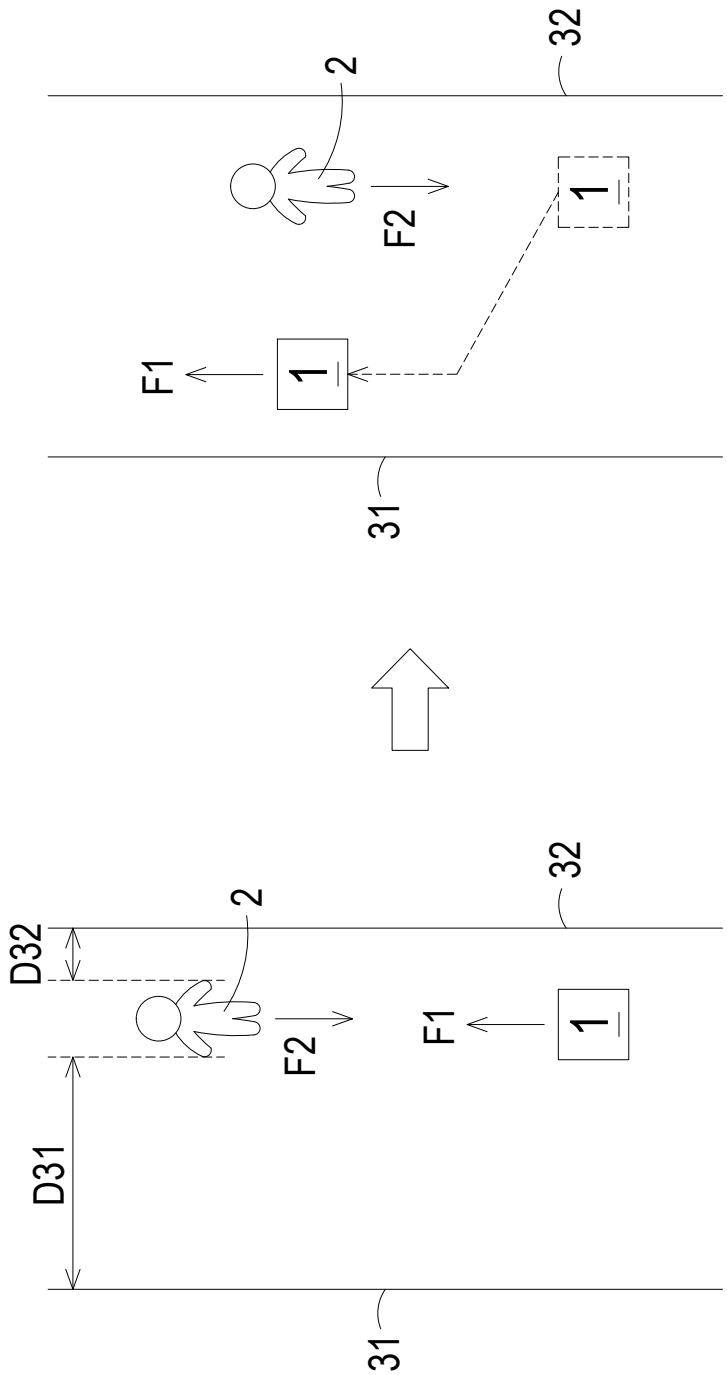

FIG. 5

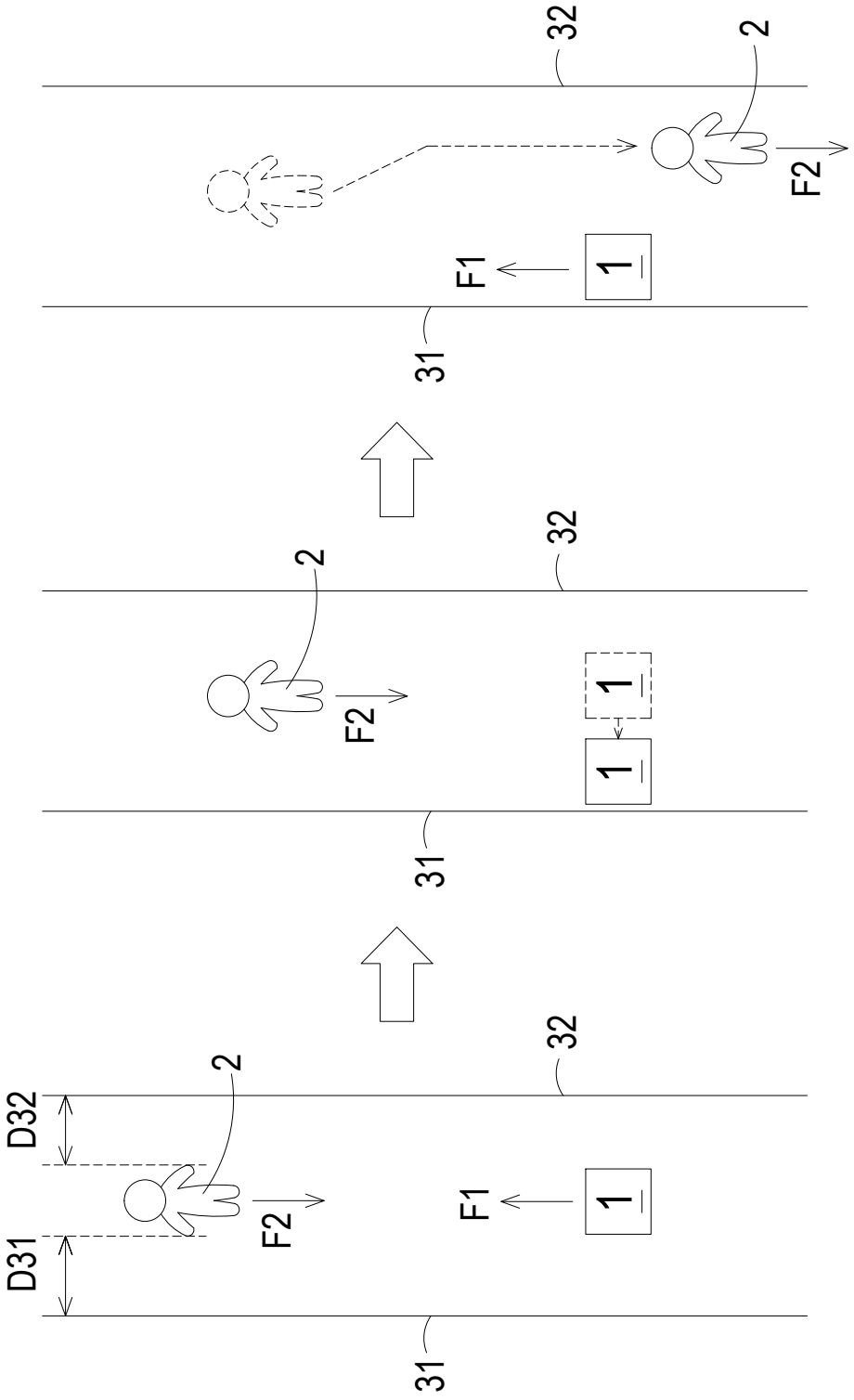

FIG. 6

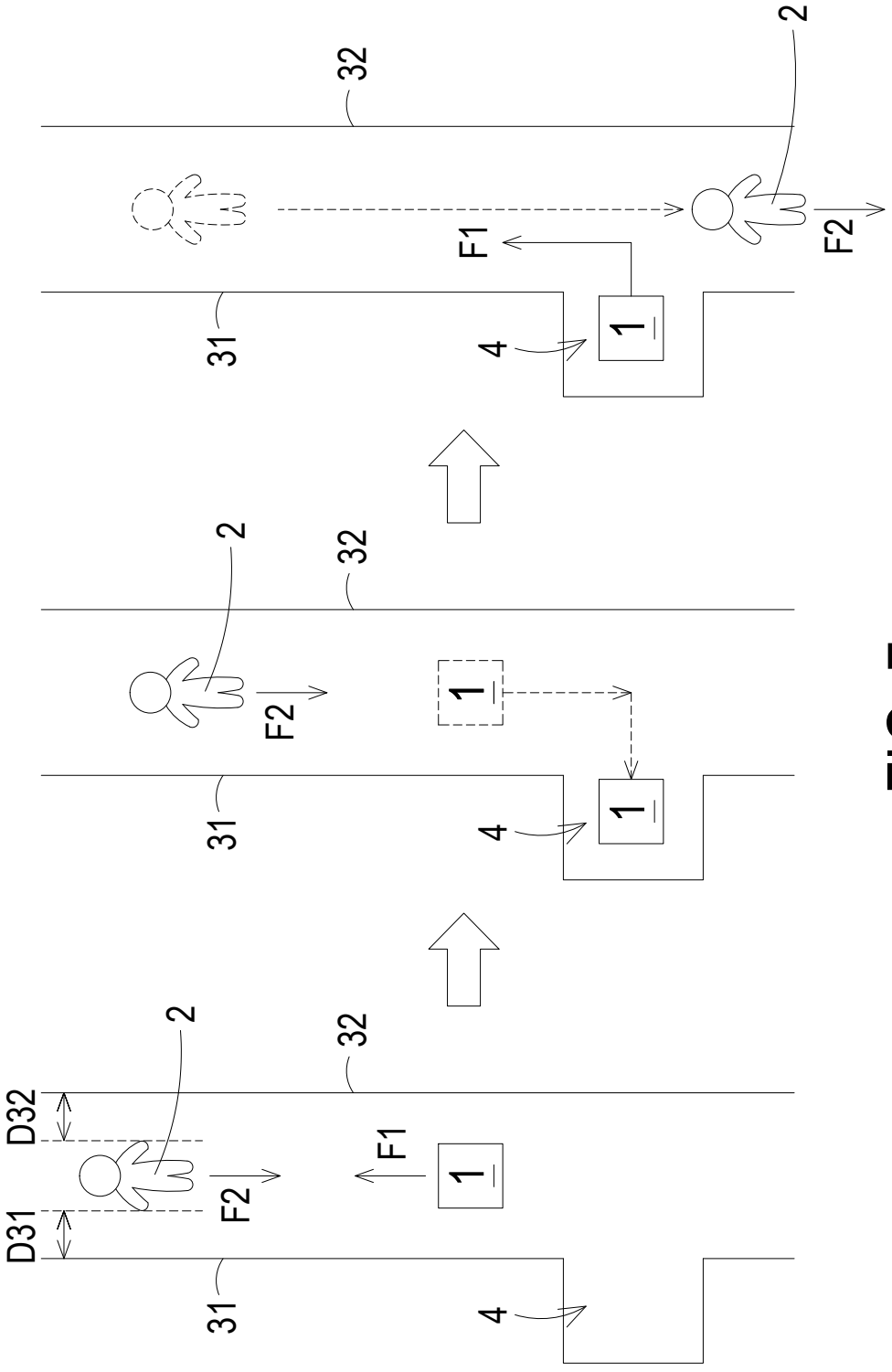

FIG. 7

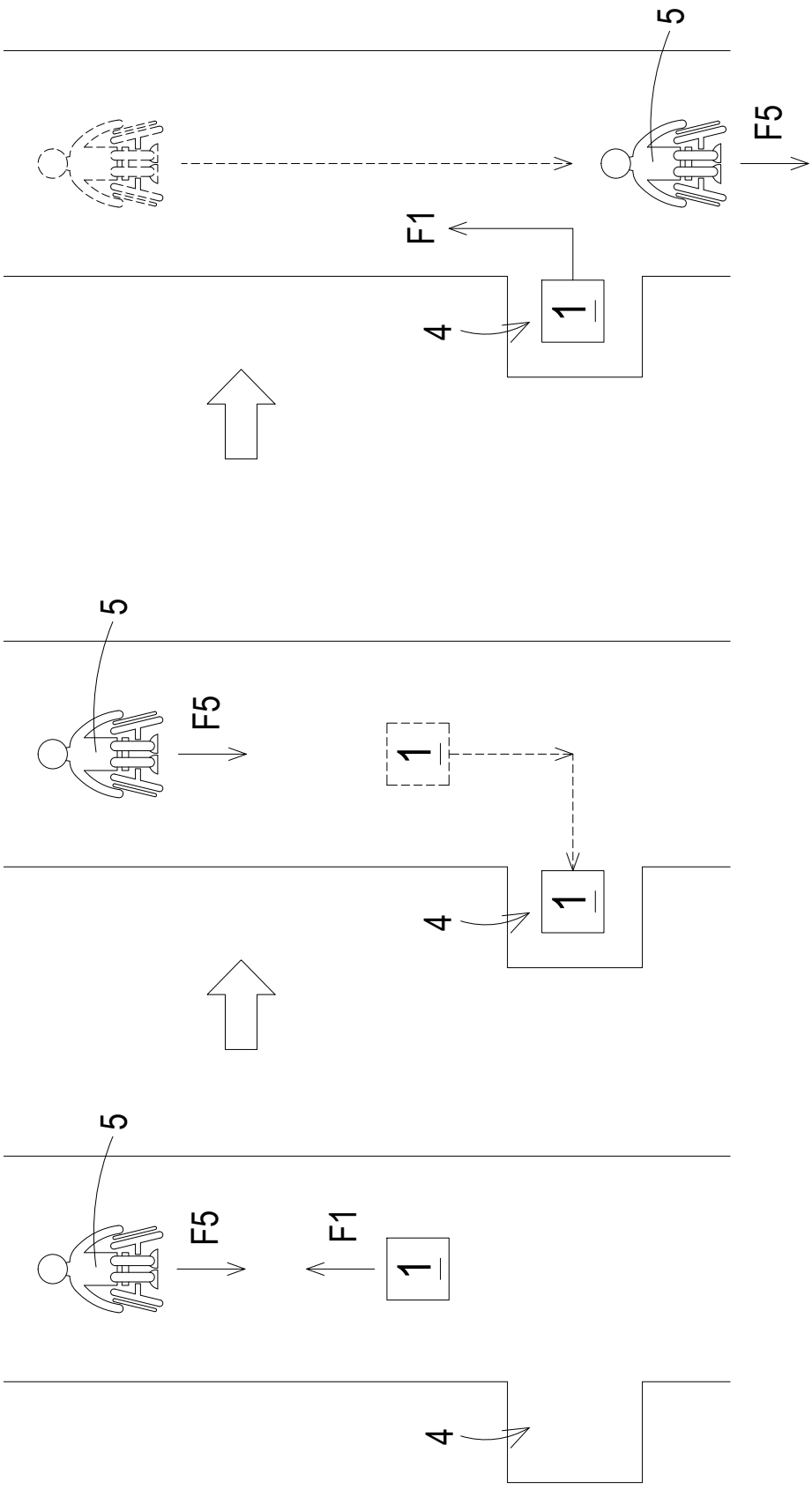

FIG. 8

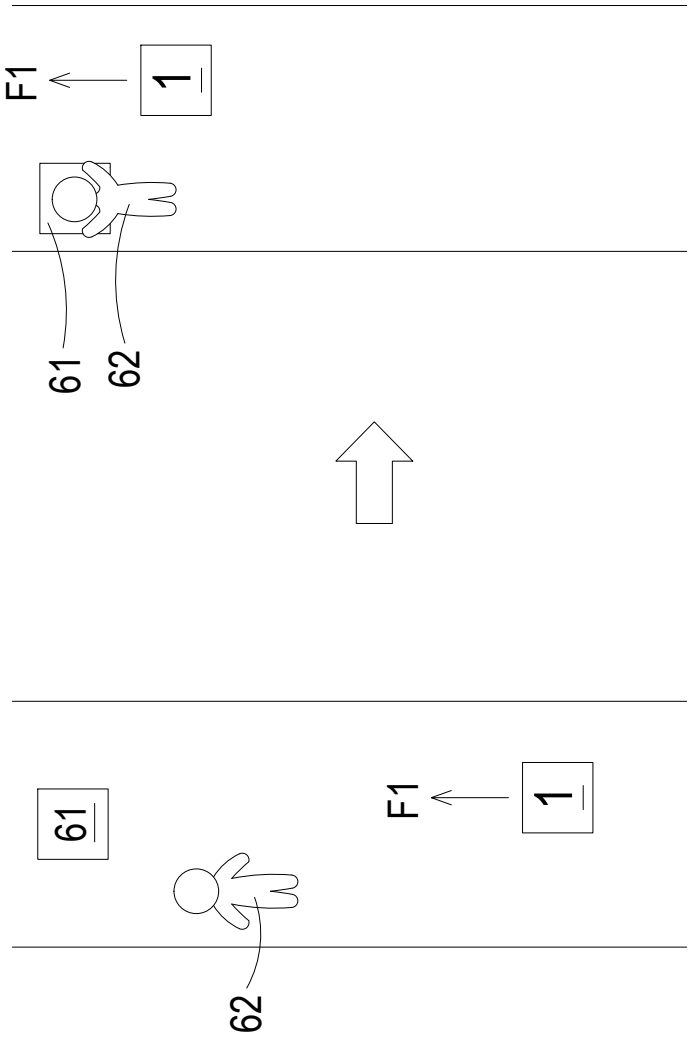

FIG.9

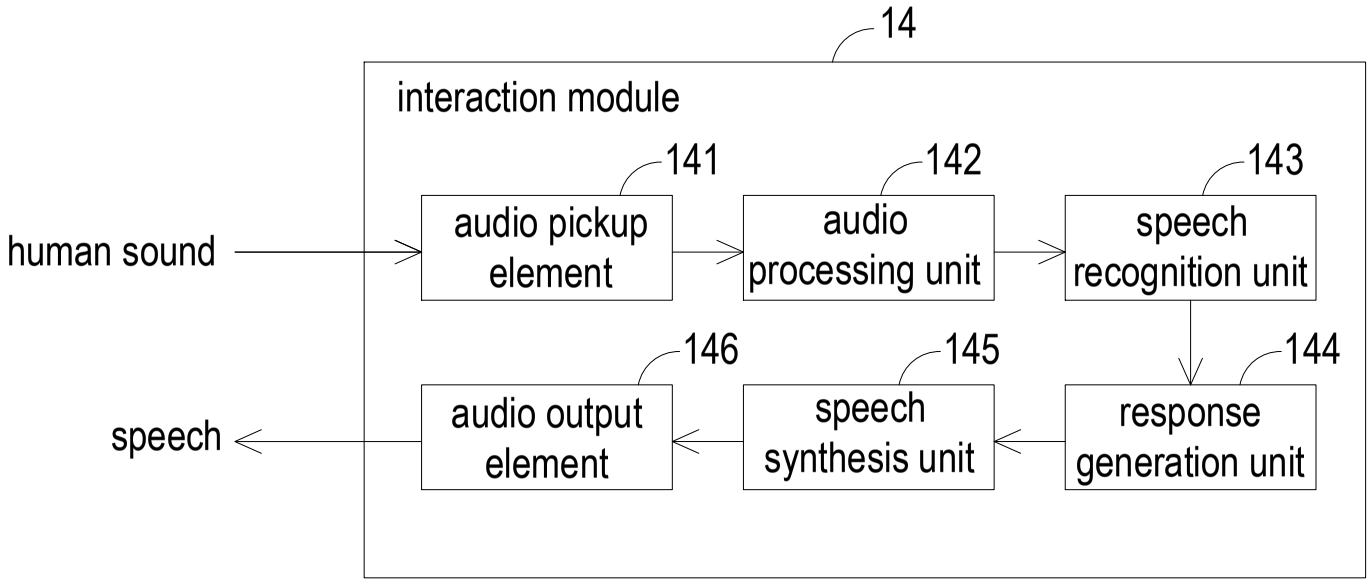
14
interaction module
141
142
143
human sound
audio pickup element
audio processing unit
speech recognition unit
146
145
144
speech
audio output element
speech synthesis unit
response generation unit

FIG. 10