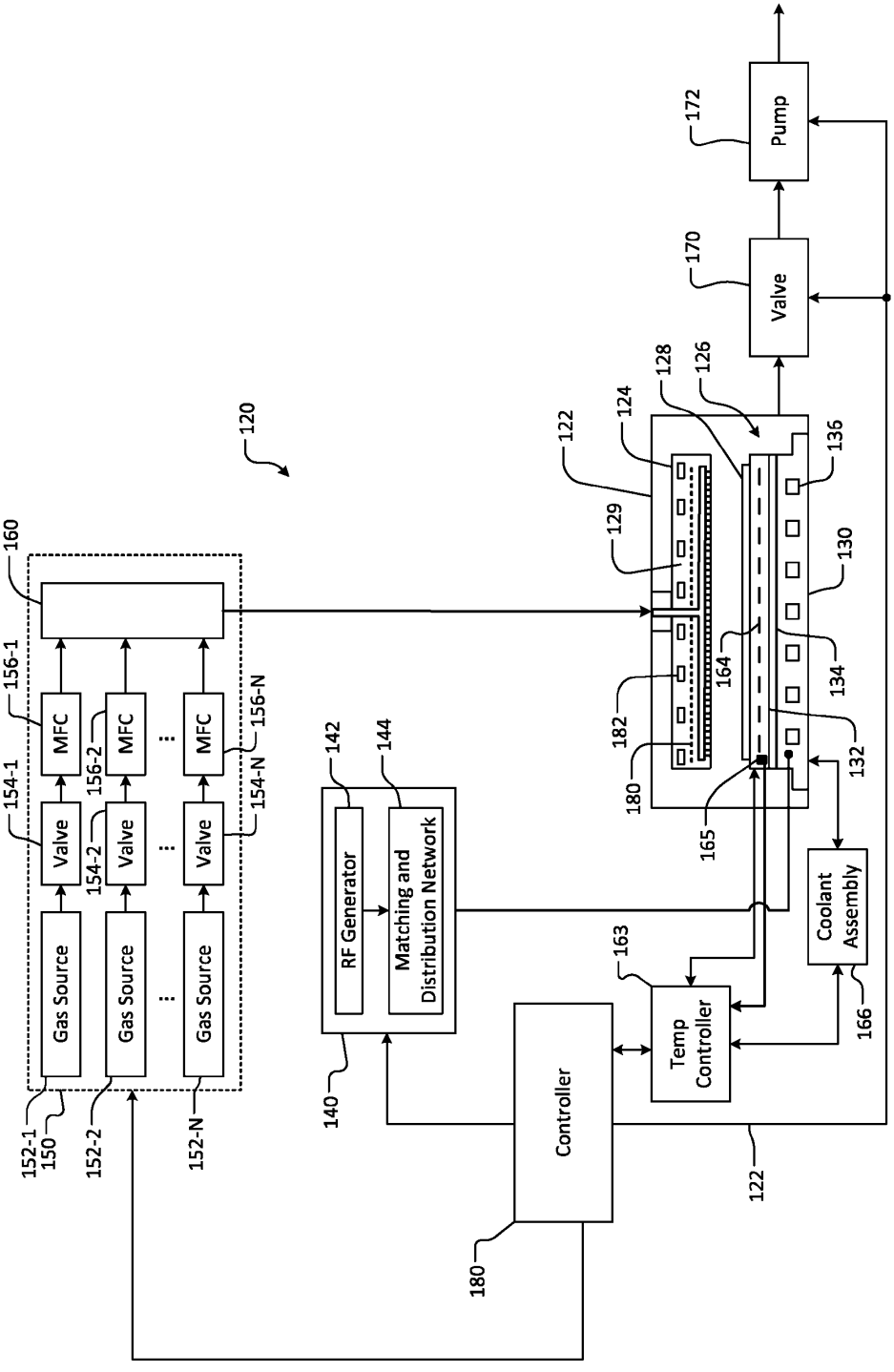
120
160
156-1
MFC
156-2
MFC
156-N
MFC
154-1
Valve
154-2
Valve
154-N
Valve
Gas Source
Gas Source
Gas Source
152-1
150
152-2
152-N
142
144
RF Generator
Matching and Distribution Network
140
Controller
180
122
163
Temp Controller
Coolant Assembly
166
122
124
128
126
129
136
130
134
164
182
180
165
132
Valve
170
Pump
172

FIG. 1

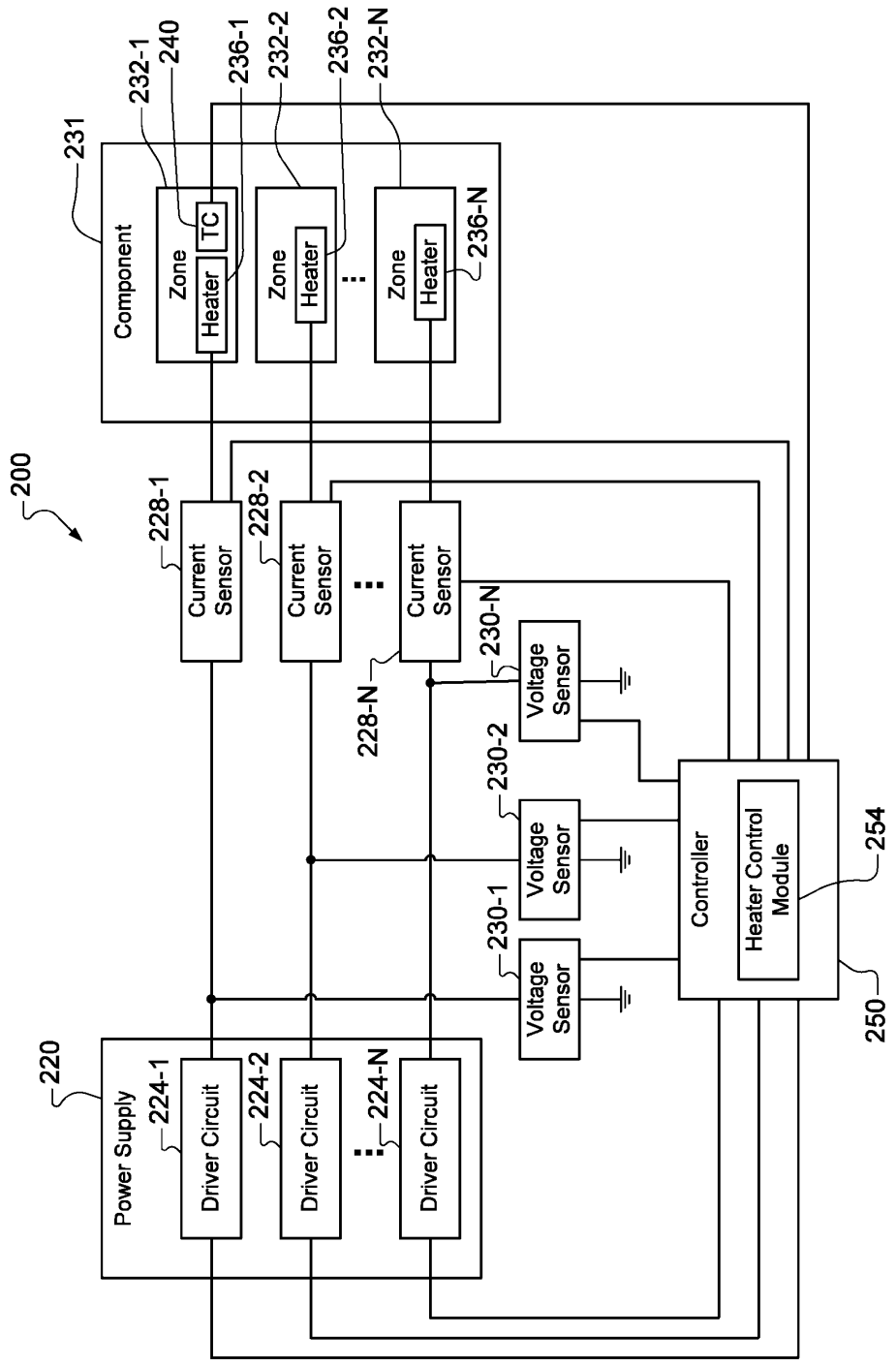
200
231
Component
Zone
Heater
TC
232-1
240
236-1
232-2
236-2
232-N
236-N
228-1
228-2
228-N
Current Sensor
230-N
230-2
230-1
Voltage Sensor
220
Power Supply
224-1
224-2
224-N
Driver Circuit
Controller
Heater Control Module
254
250

FIG. 2

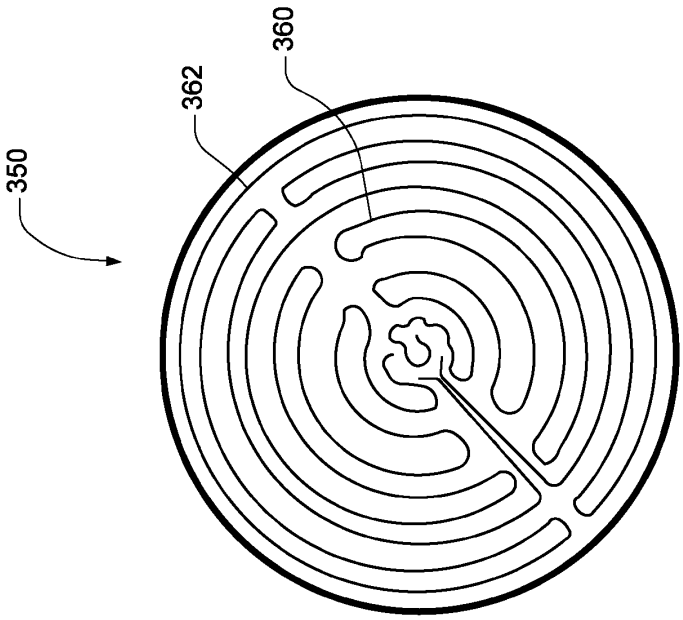

FIG. 3B

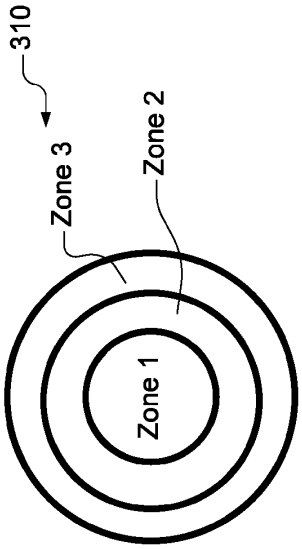

FIG. 3A

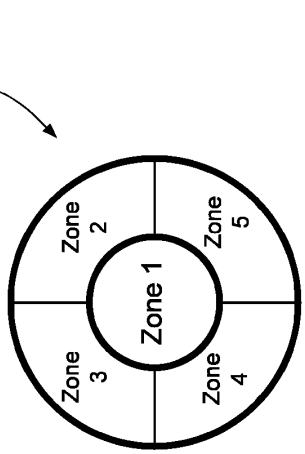

FIG. 3C

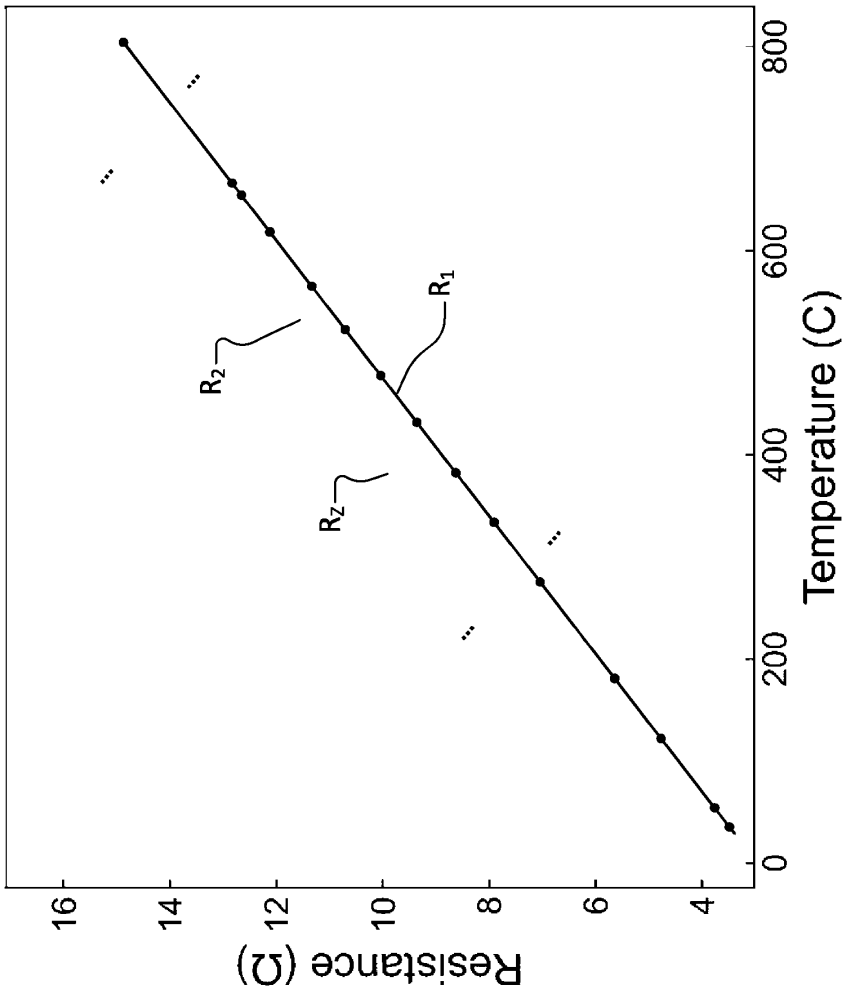
Resistance (Ω)
16
14
12
10
8
6
4
0
200
400
600
800
Temperature (C)
R_1
R_2
R_Z

FIG. 4

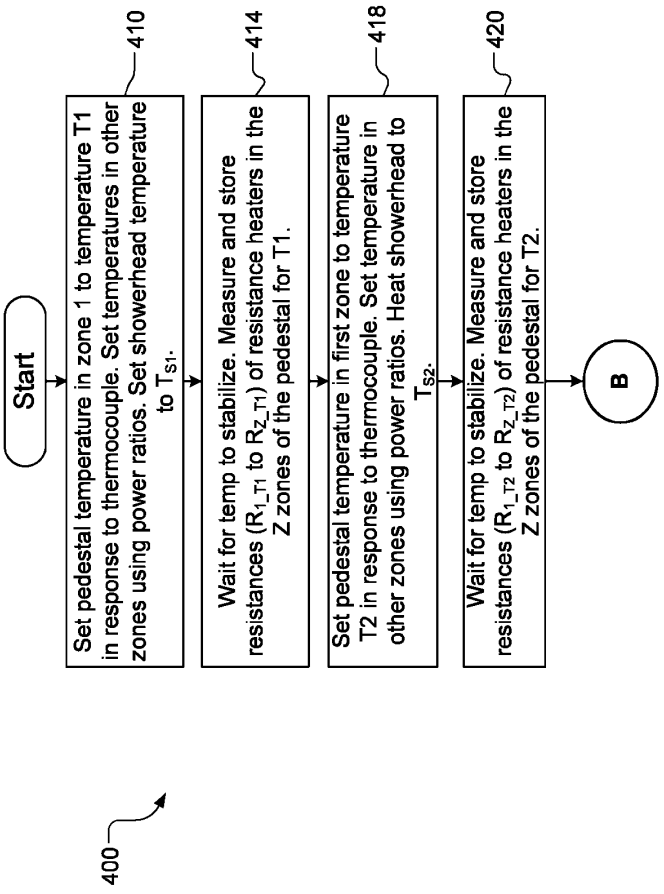
400
Start
Set pedestal temperature in zone 1 to temperature T1 in response to thermocouple. Set temperatures in other zones using power ratios. Set showerhead temperature to T_{S1}.
410
Wait for temp to stabilize. Measure and store resistances (R_{1_T1} to R_{Z_T1}) of resistance heaters in the Z zones of the pedestal for T1.
414
Set pedestal temperature in first zone to temperature T2 in response to thermocouple. Set temperature in other zones using power ratios. Heat showerhead to T_{S2}.
418
Wait for temp to stabilize. Measure and store resistances (R_{1_T2} to R_{Z_T2}) of resistance heaters in the Z zones of the pedestal for T2.
420
B

FIG. 5A

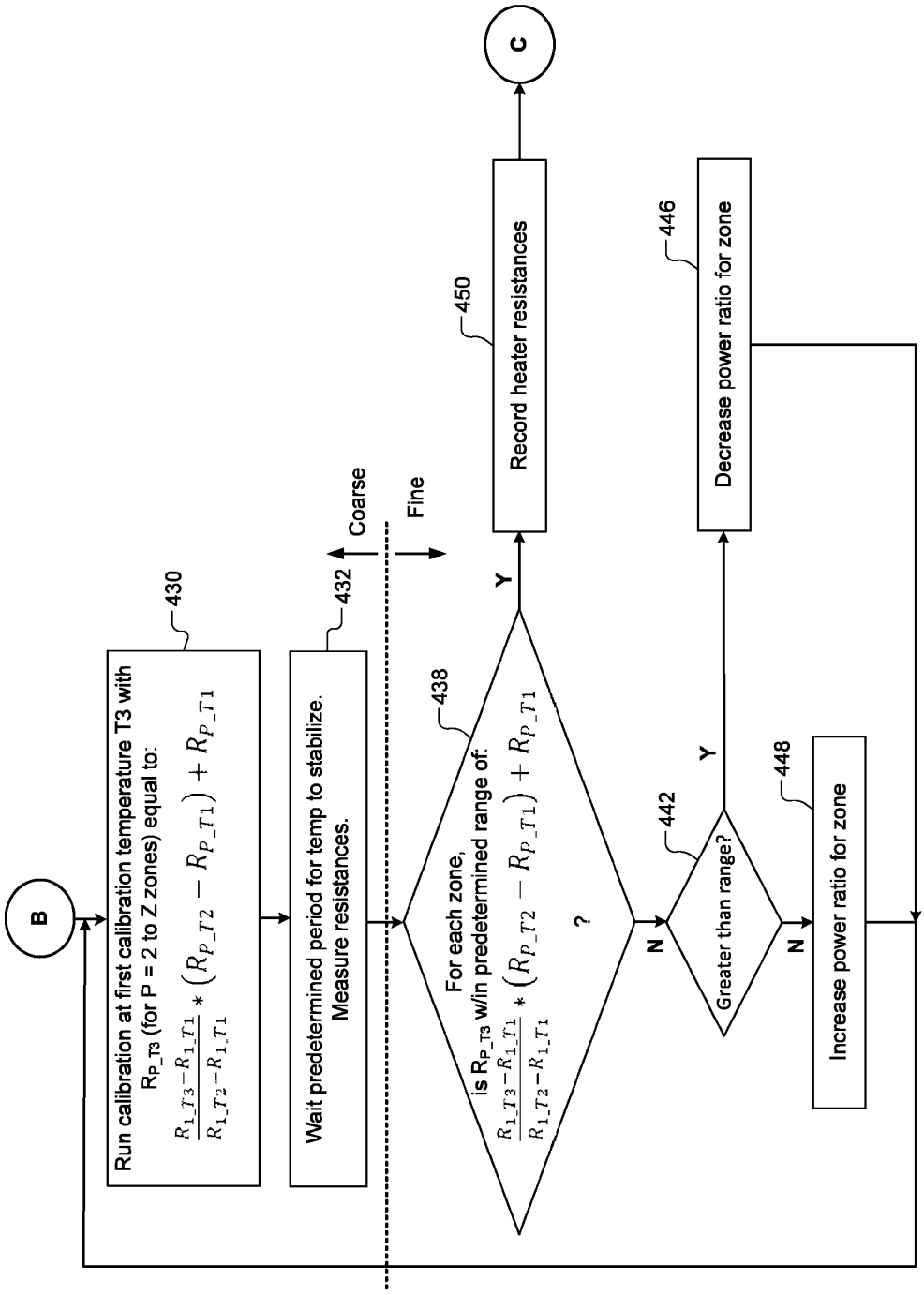
B
Run calibration at first calibration temperature T3 with R_{P_T3} (for P = 2 to Z zones) equal to: $\frac{R_{1\_T3}-R_{1\_T1}}{R_{1\_T2}-R_{1\_T1}} * \left(R_{P\_T2} - R_{P\_T1}\right) + R_{P\_T1}$
430
Wait predetermined period for temp to stabilize. Measure resistances.
432
Coarse
Fine
For each zone, is R_{P_T3} w/in predetermined range of: $\frac{R_{1\_T3}-R_{1\_T1}}{R_{1\_T2}-R_{1\_T1}} * \left(R_{P\_T2} - R_{P\_T1}\right) + R_{P\_T1}$?
438
Y
N
Record heater resistances
450
C
Greater than range?
442
Y
N
Decrease power ratio for zone
446
Increase power ratio for zone
448

FIG. 5B

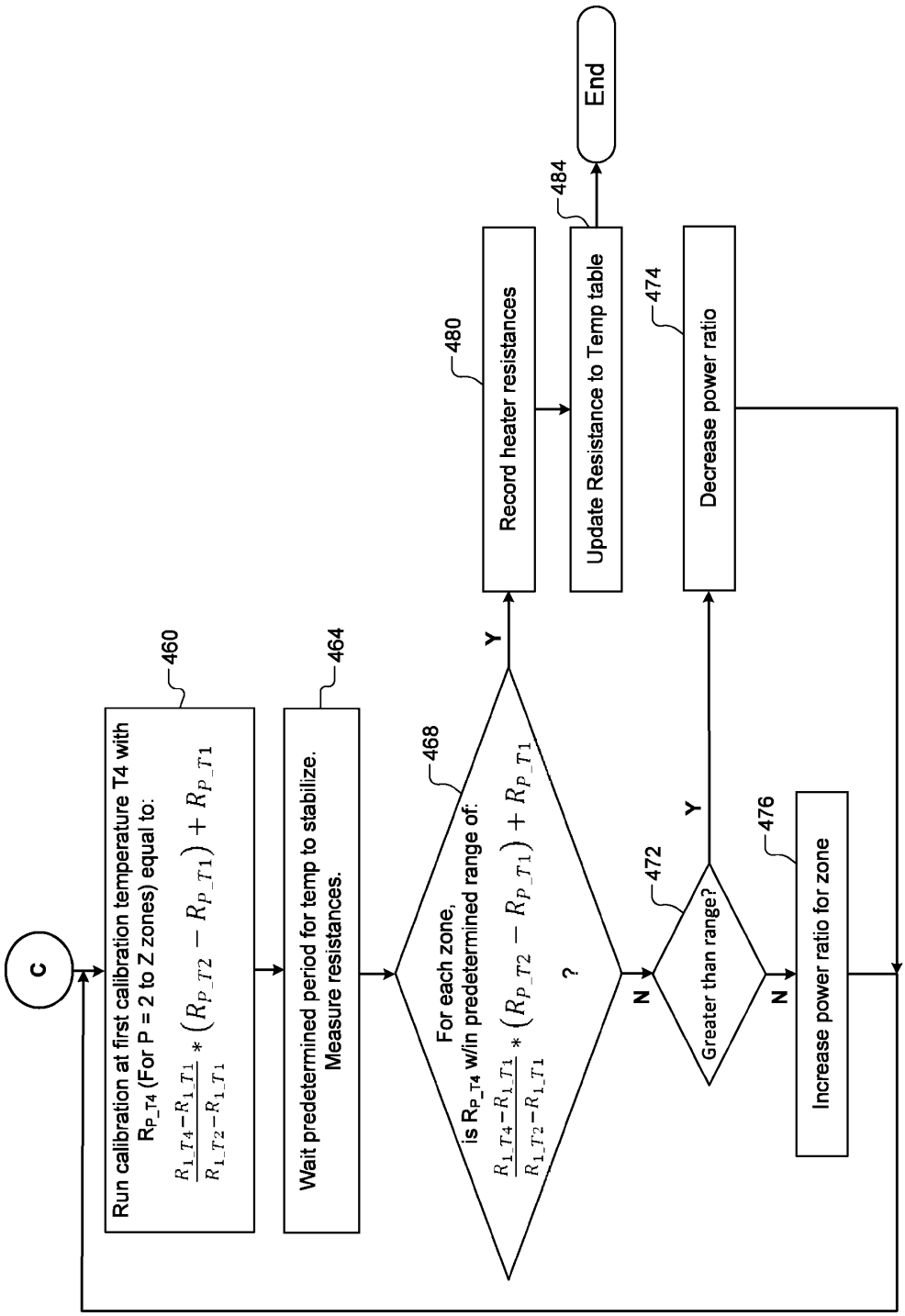
C
Run calibration at first calibration temperature T4 with R_{P_T4} (For P = 2 to Z zones) equal to: $\frac{R_{1\_T4}-R_{1\_T1}}{R_{1\_T2}-R_{1\_T1}} * \left(R_{P\_T2} - R_{P\_T1}\right) + R_{P\_T1}$
460
Wait predetermined period for temp to stabilize. Measure resistances.
464
For each zone, is R_{P_T4} w/in predetermined range of: $\frac{R_{1\_T4}-R_{1\_T1}}{R_{1\_T2}-R_{1\_T1}} * \left(R_{P\_T2} - R_{P\_T1}\right) + R_{P\_T1}$?
468
Y
N
Record heater resistances
480
Update Resistance to Temp table
484
End
Greater than range?
472
Y
N
Decrease power ratio
474
Increase power ratio for zone
476

FIG. 5C

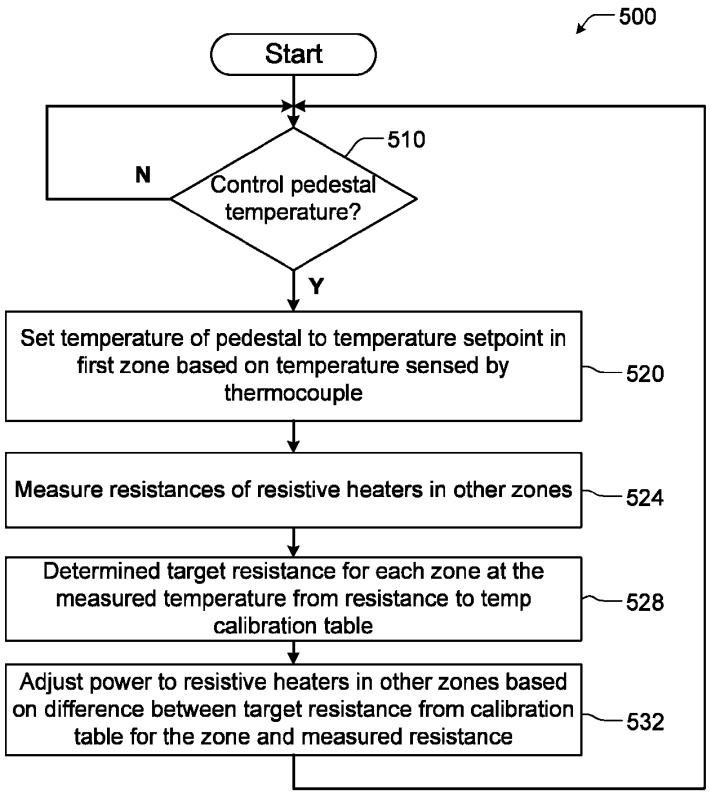
500
Start
510
N
Control pedestal temperature?
Y
Set temperature of pedestal to temperature setpoint in first zone based on temperature sensed by thermocouple
520
Measure resistances of resistive heaters in other zones
524
Determined target resistance for each zone at the measured temperature from resistance to temp calibration table
528
Adjust power to resistive heaters in other zones based on difference between target resistance from calibration table for the zone and measured resistance
532

FIG. 6