200206720-5

(A1)

(12) INTERNATIONAL APPLICATION PUBLISHED UNDER THE PATENT COOPERATION TREATY (PCT)

(19) World Intellectual Property Organization
International Bureau

(43) International Publication Date
6 December 2001 (06.12.2001)

PCT

(10) International Publication Number
WO 01/92141 A1

(51) International Patent Classification[7]: B67C 3/26

(21) International Application Number: PCT/US01/17277

(22) International Filing Date: 29 May 2001 (29.05.2001)

(25) Filing Language: English

(26) Publication Language: English

(30) Priority Data:
60/207,906 29 May 2000 (29.05.2000) US

(71) Applicant: FLUOROWARE, INC. [US/US]; 3500 Lyman Boulevard, Chaska, MN 55318 (US). CMerger PF24 lodged)

(72) Inventors: HENNEN, John; Fluoroware, Inc., 3500 Lyman Boulevard, Chaska, MN 55318 (US). WOLF, Ray; Fluoroware, Inc., 3500 Lyman Boulevard, Chaska, MN 55318 (US).

(74) Agents: CHRISTENSEN, Douglas, J. et al.; Patterson, Thuente, Skaar & Christensen, P.A., 4800 IDS Center, 80 South Eighth Street, Minneapolis, MN 55402-2100 (US).

(81) Designated States *(national)*: AE, AG, AL, AM, AT, AU, AZ, BA, BB, BG, BR, BY, BZ, CA, CH, CN, CO, CR, CU, CZ, DE, DK, DM, DZ, EE, ES, FI, GB, GD, GE, GH, GM, HR, HU, ID, IL, IN, IS, JP, KE, KG, KP, KR, KZ, LC, LK, LR, LS, LT, LU, LV, MA, MD, MG, MK, MN, MW, MX, MZ, NO, NZ, PL, PT, RO, RU, SD, SE, SG, SI, SK, SL, TJ, TM, TR, TT, TZ, UA, UG, UZ, VN, YU, ZA, ZW.

(84) Designated States *(regional)*: ARIPO patent (GH, GM, KE, LS, MW, MZ, SD, SL, SZ, TZ, UG, ZW), Eurasian patent (AM, AZ, BY, KG, KZ, MD, RU, TJ, TM), European patent (AT, BE, CH, CY, DE, DK, ES, FI, FR, GB, GR, IE,

[Continued on next page]

(54) Title: QUICK CONNECT FILL SYSTEM

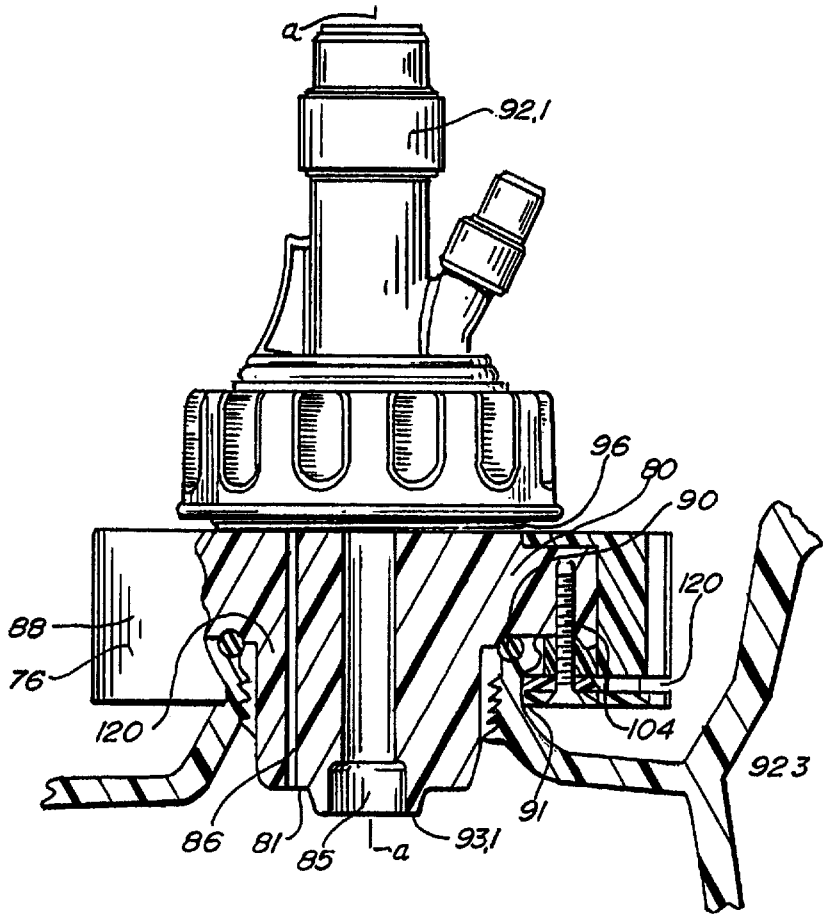

(57) Abstract: In a preferred embodiment, a quick connect adaptor (76) has a first coupling (81) that attaches to the bung of a plastic blow molded drum by way of pivotal retainer members (91) and a second coupling (82) that attaches to a conventional dispense head. The bung has internal or external threads and may have a radially extending circumferential lip or other retainer member engagement structure. The first coupling provides a secure attachment that is quickly accomplished by manual operation. In a preferred embodiment, the pivotal retaining members pivot into and out of a retention position with the radially and circumferential extending lip. The retaining members are mechanically linked with a circular manual handle member to operate the pivoting of said plurality of retaining members. The pivotal members are preferably biased toward the retention position. These couplings will generally utilize O-rings for sealing.

WO 01/92141 A1

162162

G00002

IT, LU, MC, NL, PT, SE, TR), OAPI patent (BF, BJ, CF, CG, CI, CM, GA, GN, GW, ML, MR, NE, SN, TD, TG).

Published:

— *with international search report*

— *before the expiration of the time limit for amending the claims and to be republished in the event of receipt of amendments*

For two-letter codes and other abbreviations, refer to the "Guidance Notes on Codes and Abbreviations" appearing at the beginning of each regular issue of the PCT Gazette.