PCT WORLD INTELLECTUAL PROPERTY ORGANIZATION
International Bureau

INTERNATIONAL APPLICATION PUBLISHED UNDER THE PATENT COOPERATION TREATY (PCT)

(51) International Patent Classification 6 : F25J 3/02 — A1

(11) International Publication Number: WO 96/15414

(43) International Publication Date: 23 May 1996 (23.05.96)

(21) International Application Number: PCT/US95/14563

(22) International Filing Date: 6 November 1995 (06.11.95)

(30) Priority Data:
08/337,172 10 November 1994 (10.11.94) US

(71) Applicant: ELCOR CORPORATION [US/US]; Suite 1000, Wellington Centre, 14643 Dallas Parkway, Dallas, TX 75240 (US).

(72) Inventors: CAMPBELL, Roy, E.; 1600 W. Cuthbert, Midland, TX 79701 (US). WILKINSON, John, D.; 2800 W. Dengar, Midland, TX 79705 (US). HUDSON, Hank, M.; 2508 Sinclair, Midland, TX 79701 (US).

(74) Agents: MURNANE, John, D. et al.; Brumbaugh, Graves, Donohue & Raymond, 30 Rockefeller Plaza, New York, NY 10112 (US).

(81) Designated States: AL, AM, AT, AU, BB, BG, BR, BY, CA, CH, CN, CZ, DE, DK, EE, ES, FI, GB, GE, HU, IS, JP, KE, KG, KP, KR, KZ, LK, LR, LS, LT, LU, LV, MD, MG, MK, MN, MW, MX, NO, NZ, PL, PT, RO, RU, SD, SE, SG, SI, SK, TJ, TM, TT, UA, UZ, VN, European patent (AT, BE, CH, DE, DK, ES, FR, GB, GR, IE, IT, LU, MC, NL, PT, SE), OAPI patent (BF, BJ, CF, CG, CI, CM, GA, GN, ML, MR, NE, SN, TD, TG), ARIPO patent (KE, LS, MW, SD, SZ, UG).

Published
With international search report.
Before the expiration of the time limit for amending the claims and to be republished in the event of the receipt of amendments.

① PCT Pub. + SR
② IPER + Annexes

SG 9701971-5 RTMP copy

(54) Title: HYDROCARBON GAS PROCESSING

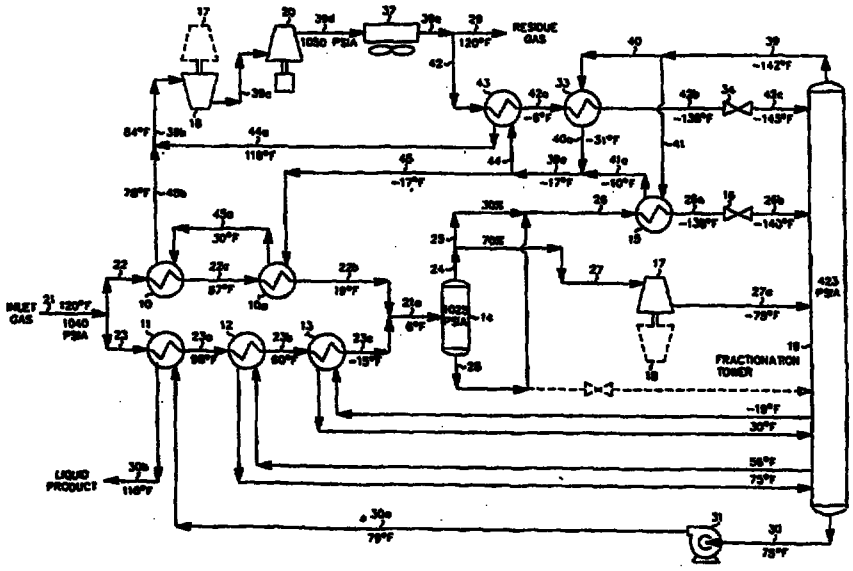

(57) Abstract

A process for the recovery of ethane, ethylene, propane, propylene and heavier hydrocarbon components from a hydrocarbon gas stream is disclosed. The stream is divided into first and second streams. The first stream is cooled to condense substantially all of it and is thereafter expanded to the fractionation tower pressure and supplied to the fractionation tower at a first mid-column feed position. The second stream is expanded to the tower pressure and is then supplied to the column at a second mid-column feed position. A recycle stream is withdrawn from the tower overhead after it has been warmed and compressed. The compressed recycle stream is cooled sufficiently to substantially condense it, and is then expanded to the pressure of the distillation column and supplied to the column at a top column feed position. The pressure of the compressed recycle stream and the quantities and temperatures of the feeds to the column are effective to maintain the column overhead temperature at a temperature whereby the major portion of the desired components is recovered.