(12) INTERNATIONAL APPLICATION PUBLISHED UNDER THE PATENT COOPERATION TREATY (PCT)

(19) World Intellectual Property Organization
International Bureau

(43) International Publication Date
18 June 2009 (18.06.2009)

PCT

(10) International Publication Number
WO 2009/074578 A1

(51) International Patent Classification:
B63H 1/36 (2006.01) *B63H 1/32* (2006.01)

(21) International Application Number:
PCT/EP2008/067125

(22) International Filing Date:
9 December 2008 (09.12.2008)

(25) Filing Language: English

(26) Publication Language: English

(30) Priority Data:
PA 2007 01758 10 December 2007 (10.12.2007) DK
61/013,193 12 December 2007 (12.12.2007) US

(71) Applicant *(for all designated States except US)*: **A.P. Møller-Mærsk A/S** [DK/DK]; Esplanaden 50, DK-1263 Copenhagen K (DK).

(72) Inventor; and

(75) Inventor/Applicant *(for US only)*: **GOVERT VERMEIDEN, Jacob** [NL/NL]; Ridderstraat 42, NL-8061 GK Hasselt (NL).

(74) Agent: **ZACCO DENMARK A/S**; Hans Bekkevolds Allé 7, DK-2900 Hellerup (DK).

(81) Designated States *(unless otherwise indicated, for every kind of national protection available)*: AE, AG, AL, AM, AO, AT, AU, AZ, BA, BB, BG, BH, BR, BW, BY, BZ, CA, CH, CN, CO, CR, CU, CZ, DE, DK, DM, DO, DZ, EC, EE, EG, ES, FI, GB, GD, GE, GH, GM, GT, HN, HR, HU, ID, IL, IN, IS, JP, KE, KG, KM, KN, KP, KR, KZ, LA, LC, LK, LR, LS, LT, LU, LY, MA, MD, ME, MG, MK, MN, MW, MX, MY, MZ, NA, NG, NI, NO, NZ, OM, PG, PH, PL, PT, RO, RS, RU, SC, SD, SE, SG, SK, SL, SM, ST, SV, SY, TJ, TM, TN, TR, TT, TZ, UA, UG, US, UZ, VC, VN, ZA, ZM, ZW.

(84) Designated States *(unless otherwise indicated, for every kind of regional protection available)*: ARIPO (BW, GH, GM, KE, LS, MW, MZ, NA, SD, SL, SZ, TZ, UG, ZM, ZW), Eurasian (AM, AZ, BY, KG, KZ, MD, RU, TJ, TM), European (AT, BE, BG, CH, CY, CZ, DE, DK, EE, ES, FI, FR, GB, GR, HR, HU, IE, IS, IT, LT, LU, LV, MC, MT, NL, NO, PL, PT, RO, SE, SI, SK, TR), OAPI (BF, BJ, CF, CG, CI, CM, GA, GN, GQ, GW, ML, MR, NE, SN, TD, TG).

Published:
— *with international search report*
— *before the expiration of the time limit for amending the claims and to be republished in the event of receipt of amendments*

(54) **Title:** TRANSLATING CHARIOT FOR FIN PROPULSION

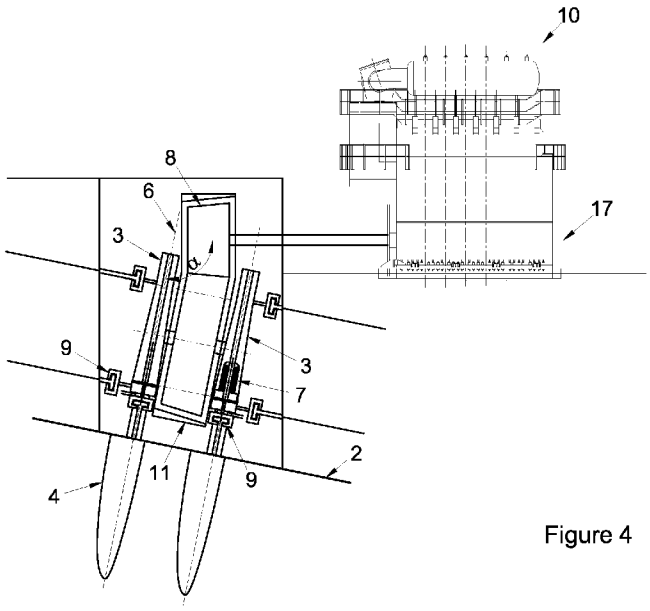

Figure 4

(57) **Abstract:** Maritime propulsive mechanism employing oscillating fins (4). The mechanism comprises a chariot (3) transferring propulsive power from a source of propulsive power (10) to the fins (4). Oscillating means, driven by a source of propulsive power (10) having a first axis of rotation (17), for oscillating the chariot (3) are provided. The fins (4) are rotatable about a second axis of rotation (6) wherein the first axis of rotation (12) forms an angle α with the second axis of rotation (6). The fins are connected to the chariot (3) via two connection points (5), (16). The oscillating means can be interposed between two chariots (3), and the oscillating means imparts flywheel-effect on the system. Forces exerted on the chariot transported through the chariot (3), and borne by bearings (9).

WO 2009/074578 A1