9402294-2
1 POS

(12) UK Patent Application (19) GB (11) 2 277 702 (13) A

(43) Date of A Publication 09.11.1994

(21) Application No 9307663.6

(22) Date of Filing 14.04.1993

(51) INT CL[5]
H05K 13/00

(52) UK CL (Edition M)
B3E ECF E1E1 E1G2 E1Y

(56) Documents Cited
WO 93/01702 A

(58) Field of Search
UK CL (Edition M) B3E
INT CL[5] H05H 13/00
ONLINE DATABASES : WPI, CLAIMS

(71) Applicant(s)
Advanced Systems Automation Pte Ltd

(Incorporated in Singapore)

65A Jalan Tenteram, St Michael's Industrial Estate, #04-08 Singapore 1232, Singapore

(72) Inventor(s)
Eng Hwee Seow

(74) Agent and/or Address for Service
Page White & Farrer
54 Doughty Street, LONDON, WC1N 2LS, United Kingdom

(54) A method and apparatus for forming leads of semiconductor devices using a single point contact swing cam

(57) The present invention employs a programmable rotary cam to fold leads of a semiconductor package from their initial positions to their final specified shape without leaving any scratch mark except the initial cam punch radius mark at the foot area of the leads. The centre of cam rotation is determined by three contact points - the contact points of the cam punch with the lead at the final lead position 95, at the initial lead position 85, and an intermediate lead position 90. Once the semiconductor package is clamped between the lower anvil and the upper clamping support, the rotary cam is lowered to a location corresponding the the centre of cam rotation. The cam punch 115 rotates and guides the leads into its final form when the inner surface of the cam punch meets the outer surface of the lower anvil. The present invention thus eliminates scratch marks on the leads from semiconductor packages. The programmable cam punch of the present invention also achieves the mean of lead specification regardless of material and plating thickness of the lead. In the preferred embodiment of the present invention, the cam punch is coupled to a servo motor such that the spring back factor of the lead material can be detected and compensated.

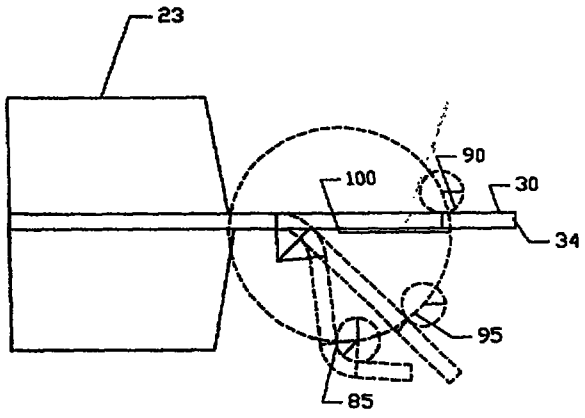

FIG.6

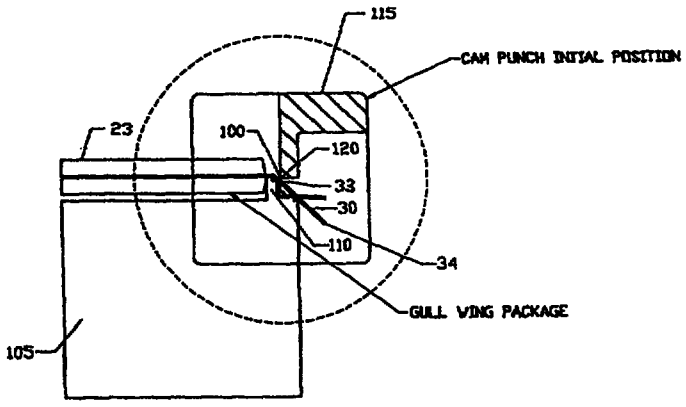

FIG 7A

This Sheet Has Been Replaced

THIS SHEET HAS BEEN REPLACED

GB 2 277 702 A

A METHOD AND APPARATUS FOR FORMING LEADS OF SEMICONDUCTOR DEVICES USING A SINGLE POINT CONTACT SWING CAM

The present invention relates to a method and apparatus for shaping leads from a semiconductor package and more particularly to a method and apparatus for forming a row of leads in accordance to gull wing package specifications without scratching or damaging the surface of the leads.

The semiconductor fabrication industry uses three methods and apparatii to form leads from semiconductor packages into gull wing packages: (1) solid punch forming, (2) multi-stage roller forming, and (3) swing cam forming.

Solid punch forming uses a punch in cooperative relationship with an anvil member to form the final lead shape of a gull wing package. This method of forming produces excessive scratches and gouging on the surface of the lead. Not only is frequent cleaning of the punches required because of the accumulation of solder due to the excessive scratches, but the quality of lead forming is poor and not uniform. Crevices between the lead and the package are common as a result of excessive punching forces exerted on the leads by the punch. Representative of solid punch forming are U.S. Pat. Nos 4,907,628 and 5,078,186.

Multi-stage roller forming employs a variety of rollers to form the leads over a fixed cam profile. The size of prior art roller construction in the die restricts this approach to forming only two sides of lead at any one time. As such, multi-stage forming is required to complete the final lead forming. The Uneven dam bar cutting in the first stage of roller forming often burrs the surface of the leads, causing frequent jamming of the rollers. The uneven



THIS SHEET HAS BEEN REPLACED

thickness of the leads can promote solder scratches off the lead surface as the clearance between the leads and the rollers is predetermined. An example of multi-stage roller forming is U.S. Pat. No. 4,829,669.

Swing cam forming relies on the swinging mechanism on the upper die that follows the lower die cam profile to form the gull wing package. Although scratches on the lead surface are reduced but they are not eliminated. Achieving the mean forming dimension of the gull wing package specification is impossible due to the cumulative errors of relative movements in the swing cam mechanism, uneven thickness of material and plating thickness and the spring back effect. An example of a swing cam forming is U.S. Pat. No. 3,416,348.

This Sheet Has Been Replaced



THIS SHEET HAS BEEN REPLACED

The present invention in the preferred embodiment employs a programmable rotary cam to fold leads of a semiconductor package from their initial positions to their final specified shape without leaving any scratch mark except the initial cam punch radius mark at the foot area of the leads. The centre of cam rotation is determined by three contact points - the contact points of the cam punch with the lead at the final lead position, at the initial lead position and an intermediate lead position. Once the semiconductor package is clamped between the lower anvil and the upper clamping support, the rotary cam is lowered to a location corresponding the the centre of cam rotation. The cam punch rotates and guides the leads into its final form when the inner surface of the cam punch meets the outer surface of the lower anvil. The present invention thus eliminates scratch marks on the leads from semiconductor packages. The programmable cam punch of the present invention also achieves the mean of lead specification regardless of material and plating thickness of the lead. In the preferred embodiment of the present invention, the cam punch is coupled to a servo motor such that the spring back factor of the lead material can be detected and compensated.

For a better understanding of the present invention and to show how the same may be carried into effect, reference will now be made by way of example to the accompanying drawings, in which:-

This Sheet Has Been Replaced



THIS SHEET HAS BEEN REPLACED

Fig. 1 illustrates the process of forming leads for a semiconductor package.

Fig. 2 is a typical mean specification for a gull wing package.

Fig. 3 shows a cross sectional view of a prior art solid punch forming for leads of a semiconductor package.

Fig. 4 illustrates a cross sectional view of a prior art swing cam forming for leads of a semiconductor package.

Fig. 5A is a cross sectional view of a prior art multi-stage roller forming for leads of a semiconductor package.

Fig. 5B is another cross sectional view of the final stage of the prior art multi-stage roller forming for leads of a semiconductor package in accordance to Fig. 5A.

Fig. 6 illustrates a cross sectional view of the single point forming for leads of a semiconductor in accordance to the present invention.

Fig. 7A shows a cross sectional view of the first stage of single point forming of the present invention.

Fig. 7B shows a cross sectional view of the second stage of single point forming of the present invention.

Fig. 7C shows a cross sectional view of the final stage of single point forming of the present invention.

Fig. 8 illustrates a cross sectional view of a programmable cam punch system of the present invention.

This Sheet Has Been Replaced



THIS SHEET HAS BEEN REPLACED

A method and apparatus for forming gull wing package without leaving scratch marks on the lead is described. In the following description, numerous specific details are set forth such as anvil and cam punch, etc. in order to provide a thorough understanding of the present invention. It will be obvious to one skilled in the art that the present invention may be practised without these specific details. In other instances, well-known parts such as those involved with servo motor and other portion of a semiconductor encapsulation system are not shown in order not to obscure the present invention.

Fig. 1 illustrates generally the process of forming leads for a semiconductor package after it emerges from the encapsulation process. Step 5 corresponds to the unit singulation process where the individual semiconductor package 23 and leads 30 are cut from the lead frame (not shown). Next, in step 10 the vertical lead forming occurs when the leads 30 are bent vertically. After the step 10, the package 23 proceeds to step 15 where the leads are either bent or rolled horizontally. Finally in step 20, the extra length of the leads 30 are cut to specification. It should be understood by one skilled in the art that steps 10, 15 and 20 are interchangeable, i.e., one step may occurs before the other.

Fig. 2 is a typical mean specification for a gull wing package. The semiconductor package 23 is shown cross sectionally having a top package 25, a bottom package 27 and the lead 30. By gull wing package the present invention refers to the mean specification for a variety of common standards in semiconductor fabrication and packaging. Throughout the specification, the semiconductor package is shown in an upright position and the lead in a dead bug configuration. It should be understood by one skilled in the art that the present invention is not limited to those configurations indicated for FIGs

This Sheet Has Been Replaced



THIS SHEET HAS BEEN REPLACED

1 - 8. In other words, the present invention is applicable in a variety of directions, including lead forming in a horizontal position or folding the leads in a live bug configuration.

Fig. 3 shows a cross sectional view of a prior art solid punch forming for leads of a semiconductor package. Solid punch forming uses a punch 35 in cooperative relationship with an anvil member 40 to form the final lead shape of a gull wing package. This method of forming produces excessive scratches and gouging on the surface 32 of the lead 30. Not only is frequent cleaning of the punches required because of the accumulation of solder due to the excessive scratches, but the quality of lead forming is poor and not uniform. Crevices between the lead 30 and the top package 25 and bottom package 27 are common as a result of excessive punching forces exerted on the leads by the punch surface 37. Moreover, the forming quality of the solid punch method depends on the material and plating thickness as well as the spring back effect of the leads. As the punch 35 and the anvil 40 are not modifiable, achieving the mean of gull wing package specification is difficult.

Fig. 4 illustrates a cross sectional view of a prior art swing cam forming for leads of a semiconductor package. Swing cam method features a lower die 45 having a cam profile 46 and an anvil face 47, and an upper die 50 having a clamping pad 49 and a swinging cam cum roller assembly 55. Swing cam forming relies on the swinging mechanism on the upper die that follows the lower die cam profile to form the gull wing package. Although scratches on the lead surface are reduced but they are not eliminated. Achieving the mean forming dimension of the gull wing package specification is impossible due to the cumulative errors of relative movements in the pivot point 57 and the roller 60 of the swing cam

This Sheet Has Been Replaced



THIS SHEET HAS BEEN REPLACED

mechanism, uneven thickness of material and plating and the spring back effect of the leads.

Fig. 5A is a cross sectional view of a prior art multi-stage roller forming for leads of a semiconductor package. Just as swing cam forming, the package 23 is clamped between a lower anvil 65 and a top clamping pad 70. The anvil face 67 and punch surface 73 holds the lead 30 in the first stage of the forming process. A roller 75 bents the lead 30 vertically along the radii path 77. Fig. 5B is another cross sectional view of the final stage of the prior art multi-stage roller forming for leads of a semiconductor package in accordance to Fig. 5A. Here, a second roller 80 bents the vertical lead into a gull wing configuration when its moves from position 80 to 80'. The size of prior art roller construction in the die restricts this approach to forming only two sides of lead at any one time. As such, multi-stage forming is required to complete the final lead forming. The uneven dam bar cutting in the first stage of roller forming often burrs the surface of the leads, causing frequent jamming of the rollers. The uneven thickness of the leads can promote solder scratches off the lead surface as the clearance between the leads and the rollers is predetermined.

Fig. 6 illustrates a cross sectional view of the single point forming for leads of semiconductor package in accordance to the present invention. The package 23 with one of its leads is shown being clamped between a lower anvil and a clamping pad (both not shown in Fig. 6 in order not to obscure the description of the present invention). The single point forming of the present invention calls for the user to determine a first contact point 85 on the lead where the lead touches the cam punch at the final lead form. In the preferred embodiment of the present invention, the final lead form can be traced on a computer aided design (CAD) system using the profile of the anvil surface as a reference. Secondly, the user determines a second

This Sheet Has Been Replaced



THIS SHEET HAS BEEN REPLACED

contact point 90 on the lead where the lead touches the cam punch at the initial lead form. In the preferred embodiment of the present invention, the initial lead form is where the lead extends outwardly from the package without being bent or fold by the cam punch. Just as the first contact point 85, this second contact point may be derived on a CAD system. Thirdly, the user determines a third contact point 95 at an intermediate lead position between that of the final lead position and the initial lead position. In the preferred embodiment of the present invention, an angle of 45 degrees has being chosen as the derivation on the CAD system is straight forward. It should be understood by one skilled in the art that any intermediate lead position can be used to derived the location of the third contact point. With the three contact points 85, 90 and 95, a centre of cam rotation 100 can be determined in a straight forward manner.

The centre of cam rotation 100 shall be the pivoting centre around which the cam punch (shown in Fig. 7A, 7B and 7C) rotates and fold the lead 30 to the final lead position. As the contact points 85, 90 and 95 represents the same location which the cam punch is in contact with the lead, only one single punch mark is made on the lead while forming the gull wing package. The centre of cam rotation is an imaginary centre unique for leads of different material and plating thickness, spring back effect of the lead and mean specification. By requiring the cam punch to rotate around the centre of cam rotation, the present invention minimizes the number of scratch marks made on the lead while forming it according to the mean specification. Moreover, the spring back effect of the leads are also compensated.

Fig. 7A shows a cross sectional view of the first stage of single point forming of the present invention. The package 23 with its lead 30 is shown being clamped against the the anvil surface 110 and a clamping pad (not shown for clarity purpose). Referring to Fig. 7A, the centre of cam rotation

This Sheet Has Been Replaced

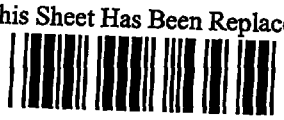

THIS SHEET HAS BEEN REPLACED

100 has been ascertained by the method outlined in the description for Fig. 6. Here, a cam punch 115 is positioned such that its edge 116 is in contact with the lead 30 at the bending point 33. Fig. 7B shows a cross sectional view of the second stage of single point forming of the present invention. The cam punch 115' is rotated around the centre of cam rotation 100 into an intermediate point between the initial lead position and the final lead position. Note that the cam punch has only made one punch mark, i.e., bending point 33, on the lead as it fold the lead into a gull wing configuration. Referring again to Fig. 7B, the centre of cam rotation 100 is superimposed over the bending point 33. As such, the bending point 33 is not illustrated in order not to cluster the drawing. Finally, Fig. 7C shows a cross sectional view of the final stage of single point forming of the present invention. Here, the cam punch 115" folds the lead into close proximity with the outer surface of the anvil surface 110. Once again, the punch mark on the lead remain the initial punch mark made on or at the bent point 33 of the lead.

Fig. 8 illustrates a cross sectional view of a programmable cam punch system of the present invention. The programmable cam punch system comprises a lower die 125 having an anvil 126, an upper die 130 having a clamping pad 135, servo motors 140, timing belt 145 and cam punches 150. The anvil 126 and the clamping pad 135 are for holding the package between the the lower and upper die so that the leads are exposed outwardly. While the centre of cam rotation 100 is determined by the system, the servo motor 140 engages the cam punch 150 over the timing belt 145 to rotate around the centre of rotation 100. The servo motor 140 is preferably coupled to a computer for forwarding information regarding the material and plating thickness of the lead. Furthermore, data on the spring back effect of the lead can also be monitored and compensated as the cam punches 150

This Sheet Has Been Replaced

THIS SHEET HAS BEEN REPLACED

fold the leads into their final lead position. In Fig. 8 only two servo motors 140 are shown. In the preferred embodiment of the present invention, there are four servo motors - one for each side of the semiconductor package. Furthermore, the activation of the servo motor is coordinated with the lowering of the clamping pad such that all the leads from any semiconductor package can be folded in one clamp-and-rotate motion of the programmable cam punch system of the present invention.

While the present invention has been described particularly with reference to FIGS. 1 to 8 with emphasis on a method to recognize speech automatically in a computer environment, it should be understood that the figures are for illustration only and should not be taken a limitation on the invention. In addition, it is clear that the method and apparatus of the present invention has utility in many applications where automatic speech recognition is required. It is contemplated that many changes and modifications may be made by one of ordinary skill in the art without departing from the spirit and the scope of the invention as described.

This Sheet Has Been Replaced



THIS SHEET HAS BEEN REPLACED

Claims

1. A method for forming leads for semiconductor package in a semiconductor encapsulation process, said system including at least an anvil and clamping block for clamping the leads from said package, said method comprising

moving at least one rotary cam to an imaginary centre of cam rotation, said centre being equidistant from at least three contact points, said contact points corresponding to the initial point of contact between the rotary cam and the lead, the final point of contact between the rotary cam and the lead and an intermediate point of contact between the initial point of contact and the final point of contact ; and

rotating said rotary cam to the final lead position without creating more than one punch mark on said lead.

2. The method according to claim 1 wherein said final lead position conforms with gull wing configuration.

3. The method according to claim 1 wherein said rotary cam is actuated by a servo motor.

4. The method according to claim 3 wherein said servo motor is coordinated with the motion of said clamping block for forming leads of semiconductor package in at most one clamp-and-rotate motion.

5. A method for forming leads of a semiconductor package without creating more than one punch mark on the leads as hereinbefore described with reference to or as shown in the accompanying drawings.

This Sheet Has Been Replaced

THIS SHEET HAS BEEN REPLACED

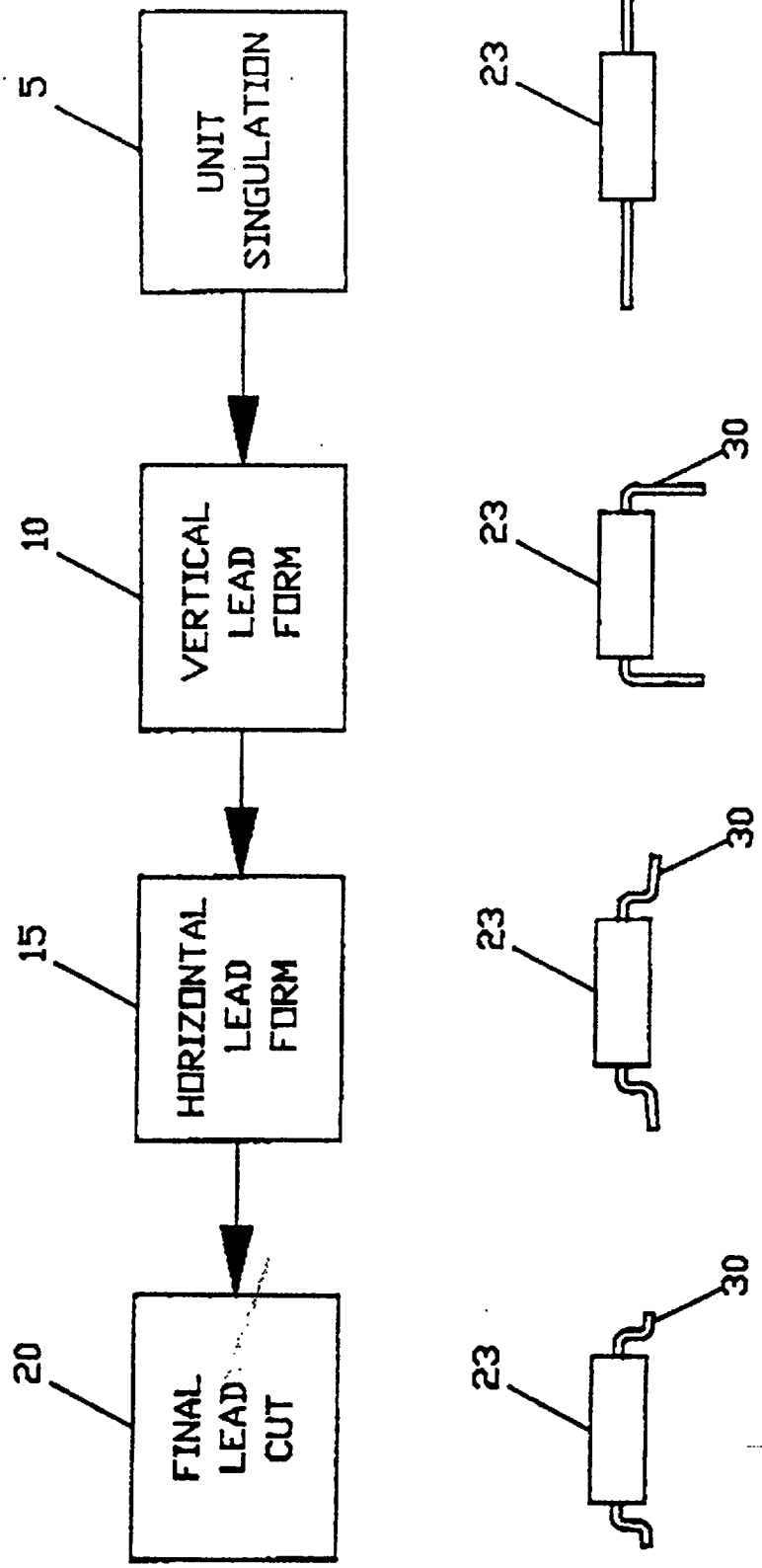

FIG. 1

This Sheet Has Been Replaced



THIS SHEET HAS BEEN REPLACED

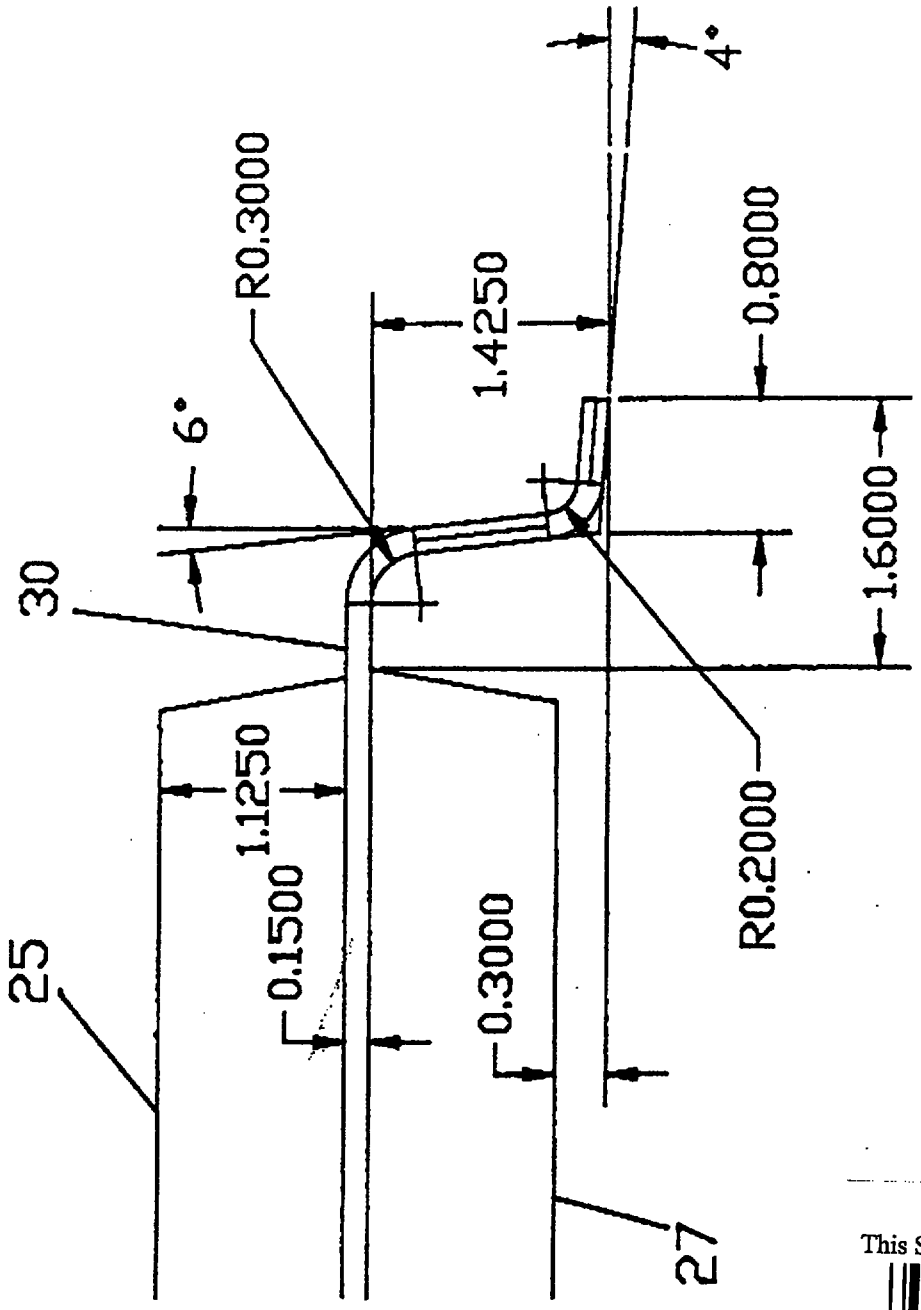

FIG.2

This Sheet Has Been Replaced

THIS SHEET HAS BEEN REPLACED

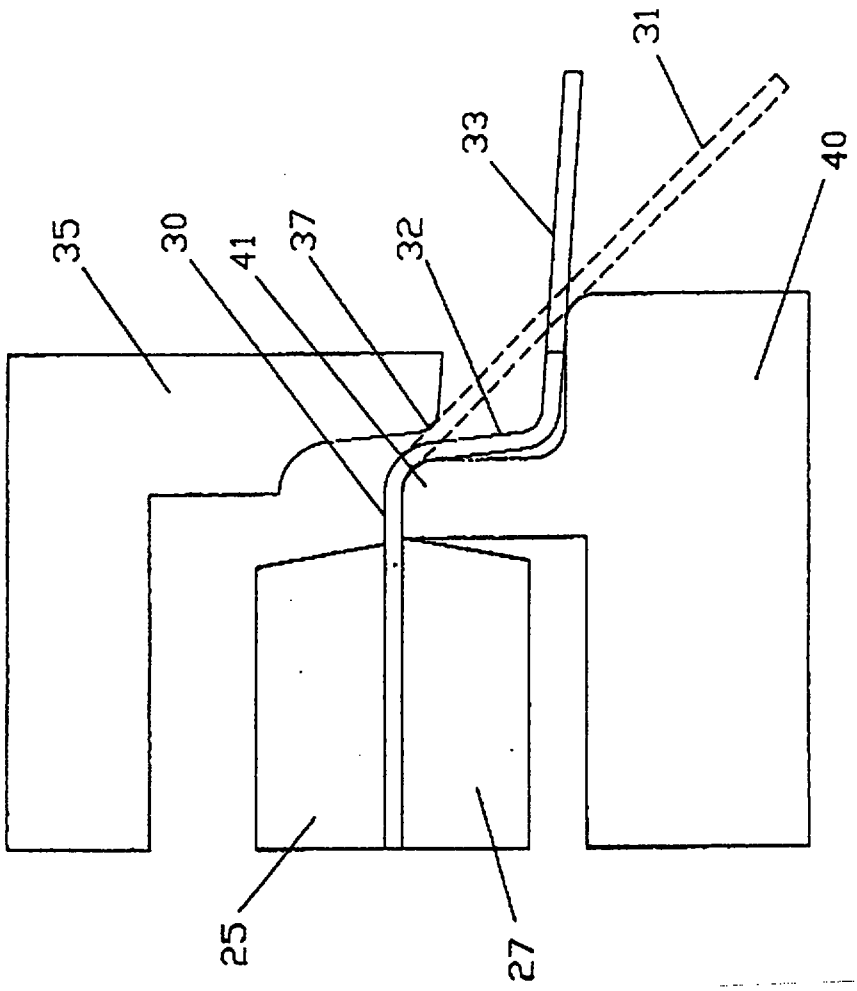

FIG.3 (PRIOR ART)

This Sheet Has Been Replaced

THIS SHEET HAS BEEN REPLACED

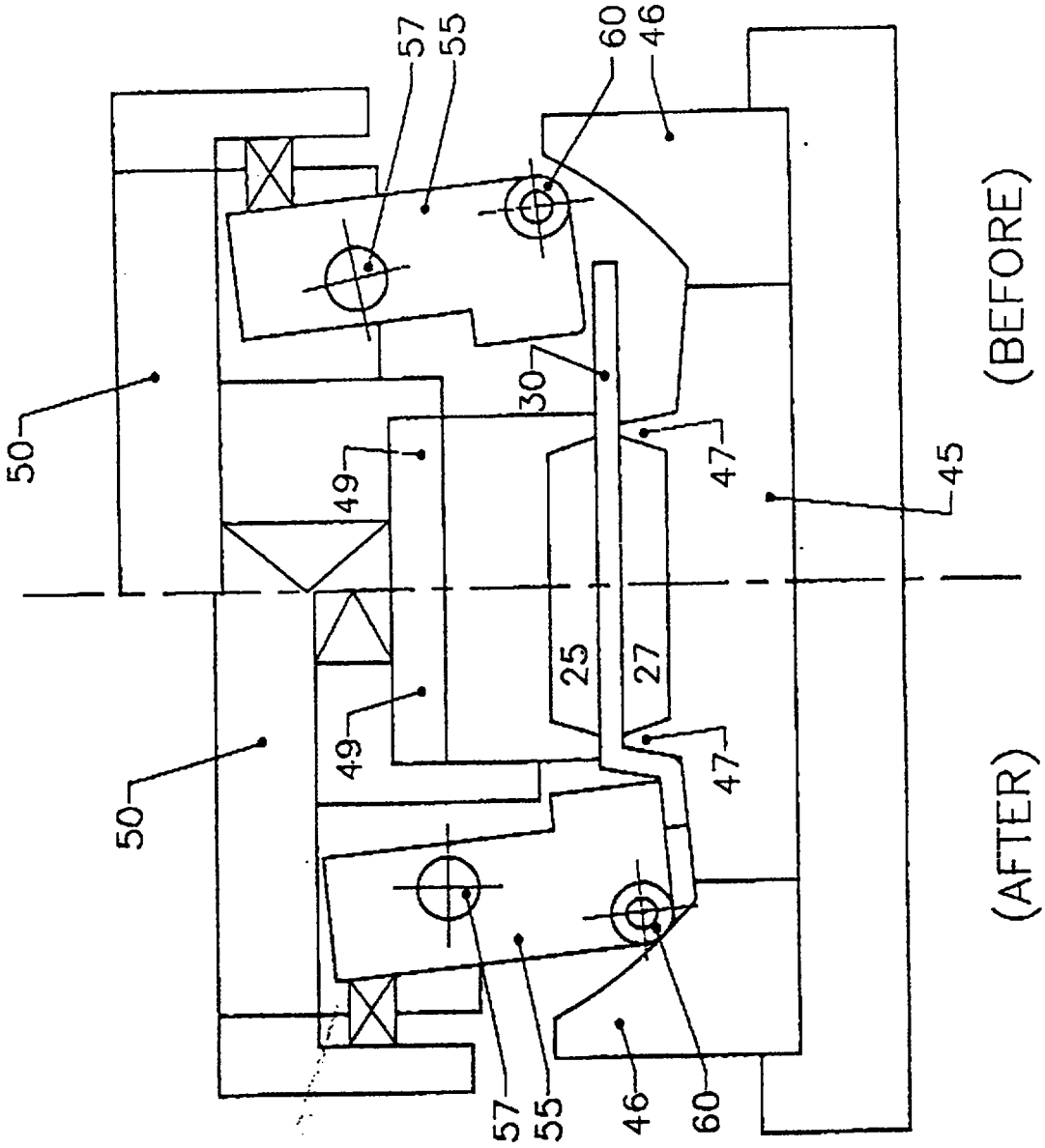

FIG 4 (PRIOR ART)

This Sheet Has Been Replaced

THIS SHEET HAS BEEN REPLACED

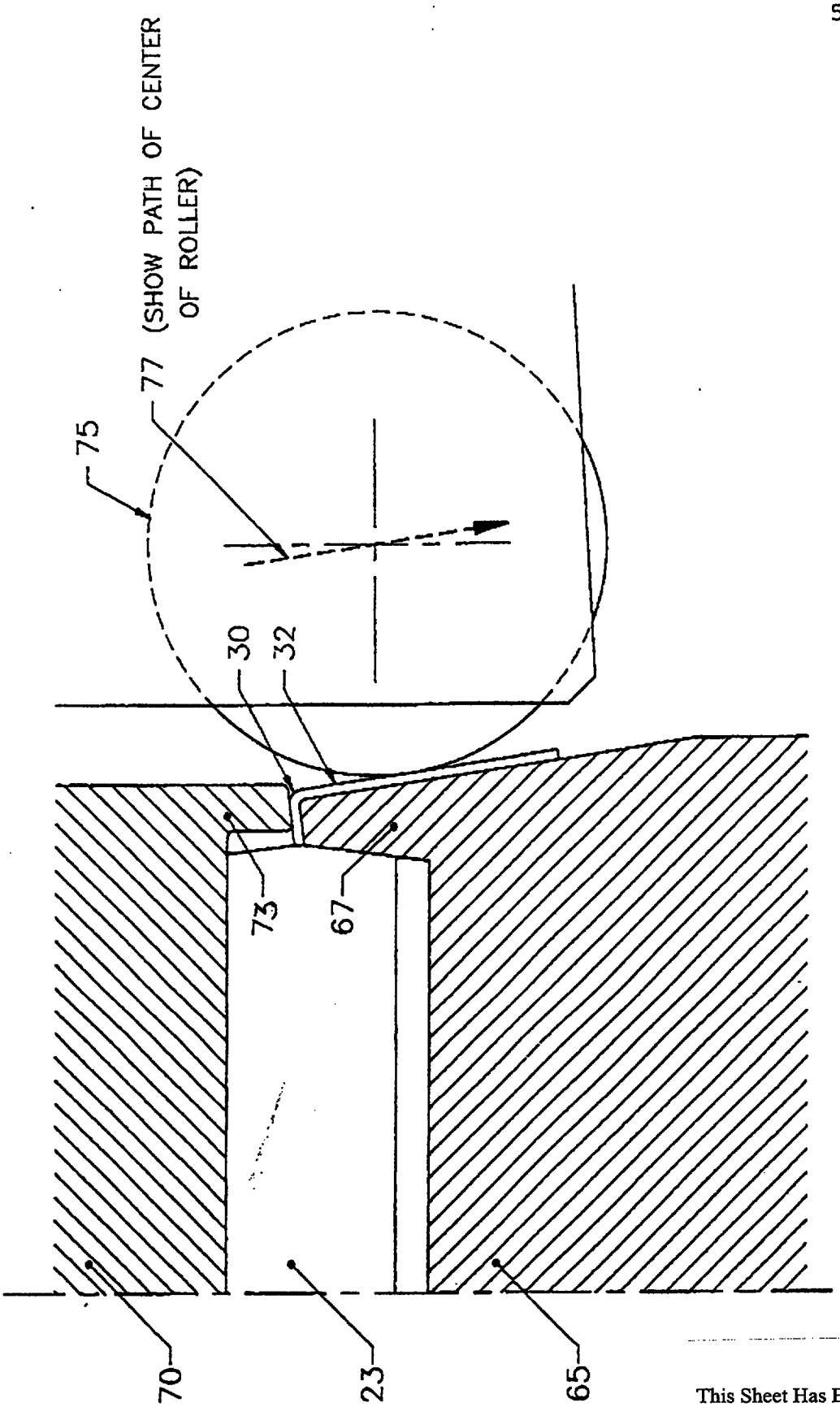

FIG 5A (PRIOR ART)

This Sheet Has Been Replaced

THIS SHEET HAS BEEN REPLACED

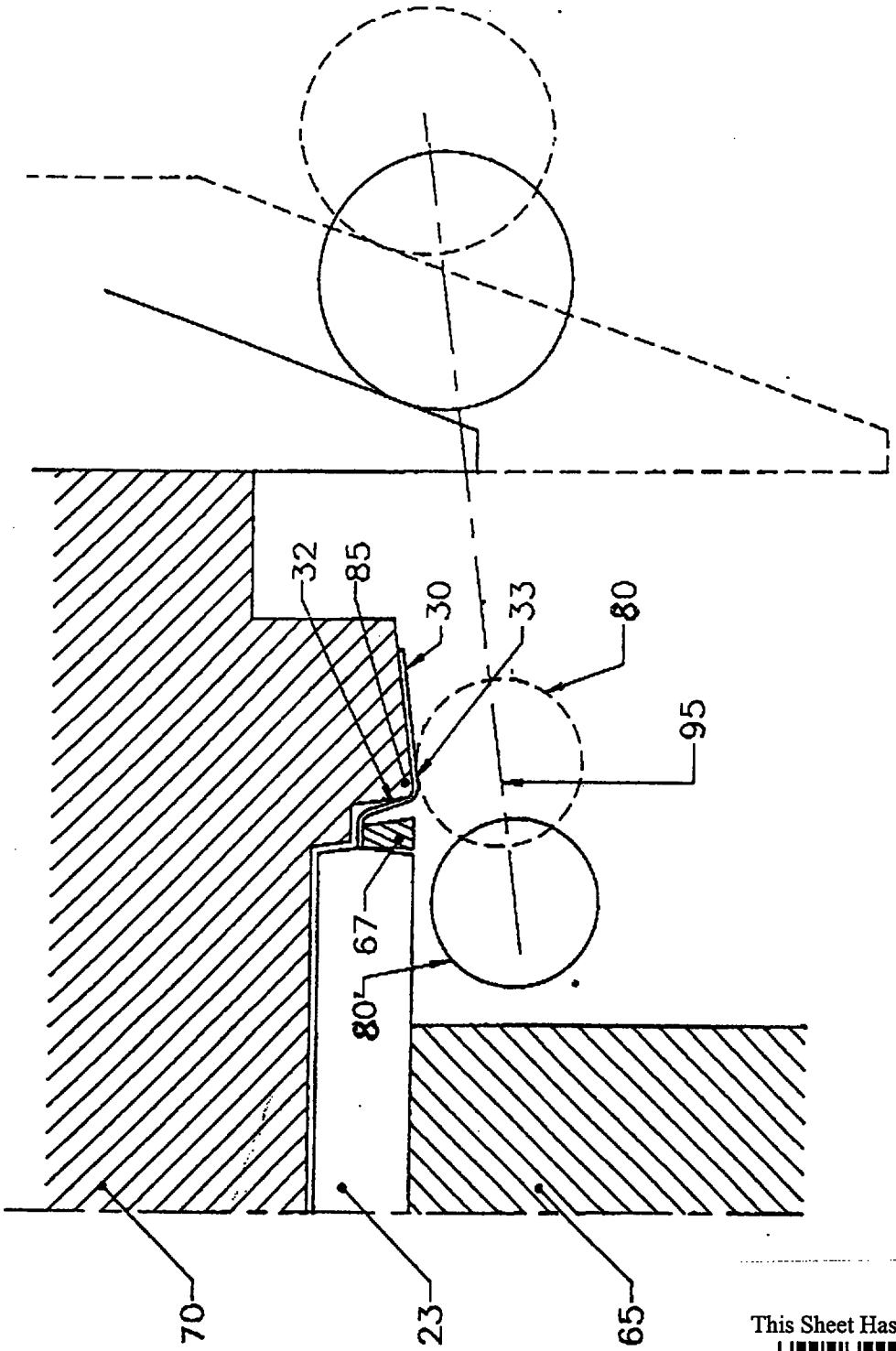

FIG 5B (PRIOR ART)

This Sheet Has Been Replaced



THIS SHEET HAS BEEN
REPLACED

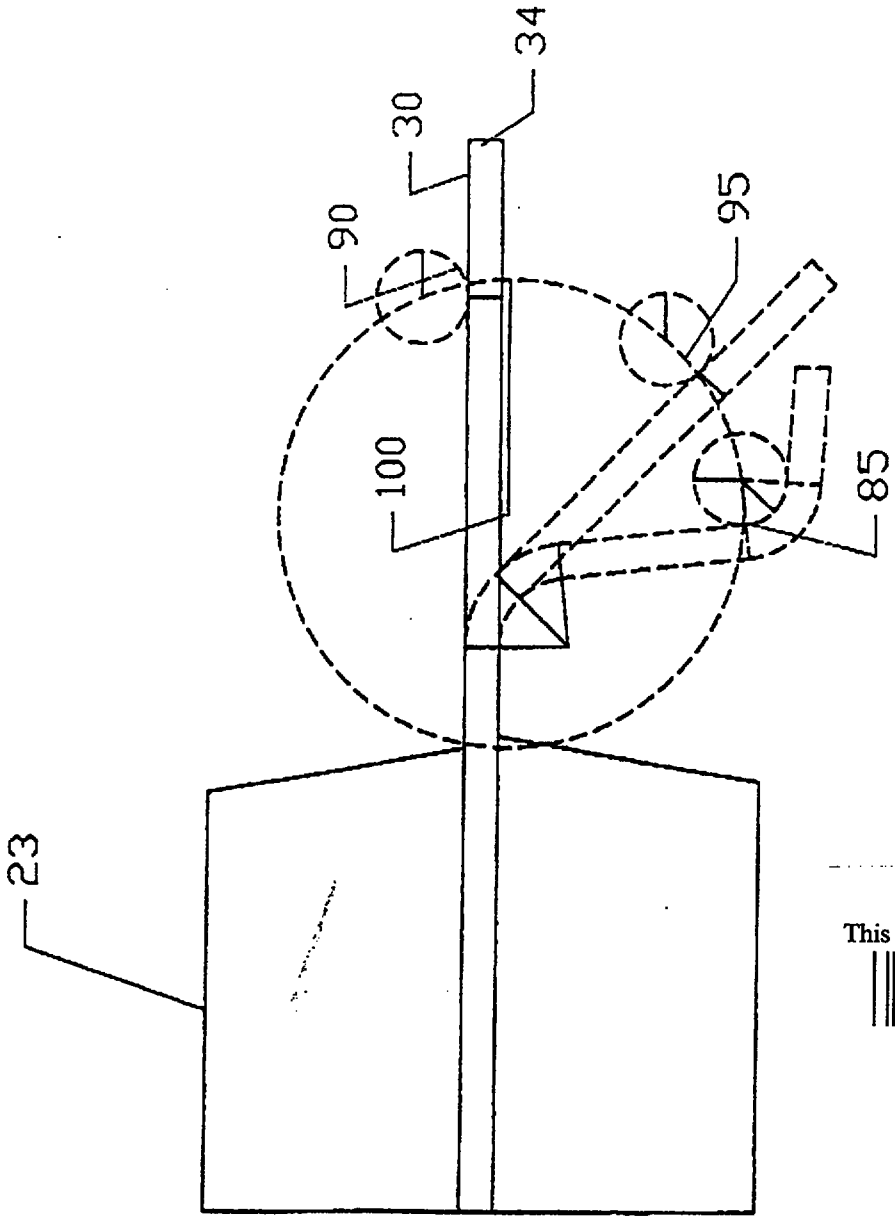

FIG.6

This Sheet Has Been Replaced



THIS SHEET HAS BEEN REPLACED

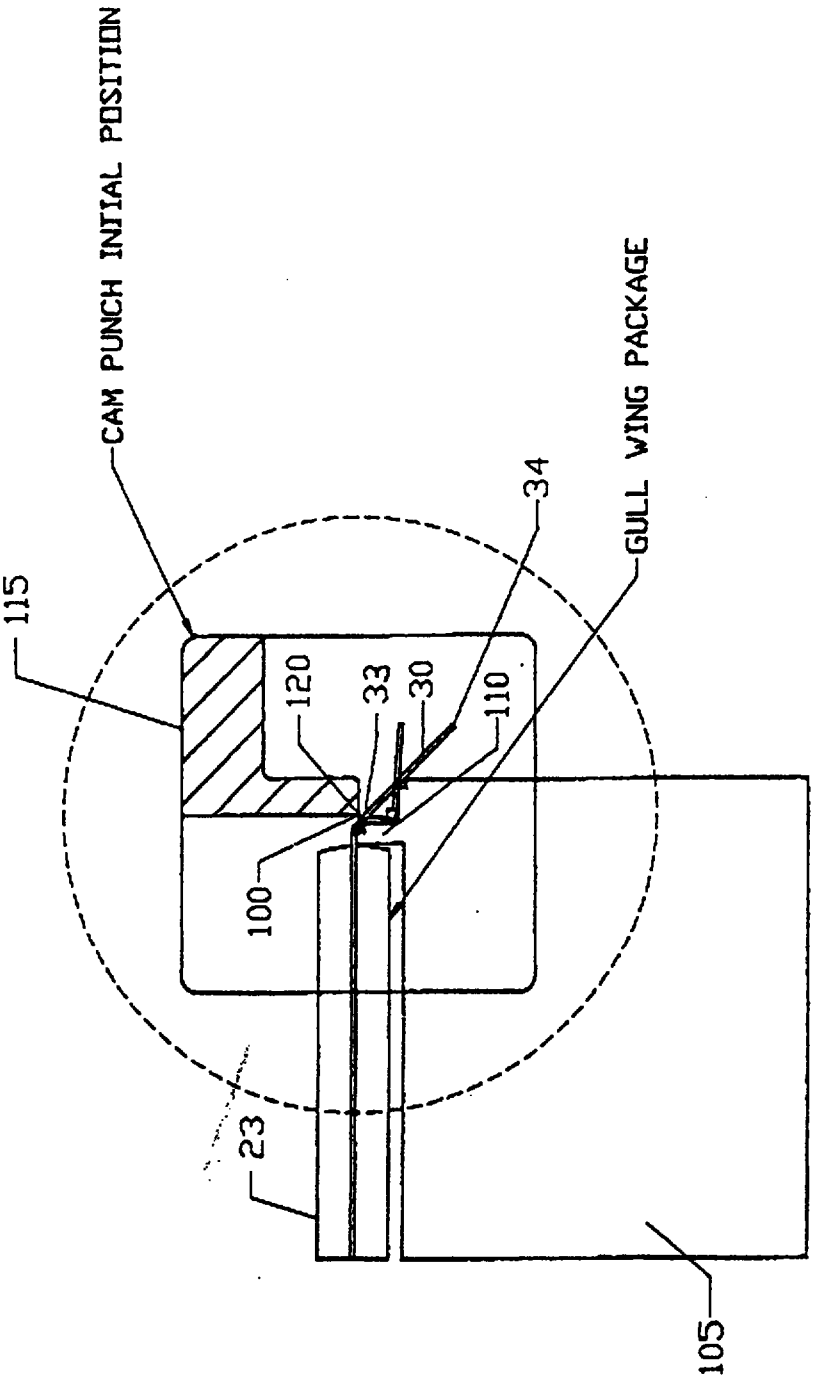

FIG 7A

This Sheet Has Been Replaced



THIS SHEET HAS BEEN REPLACED

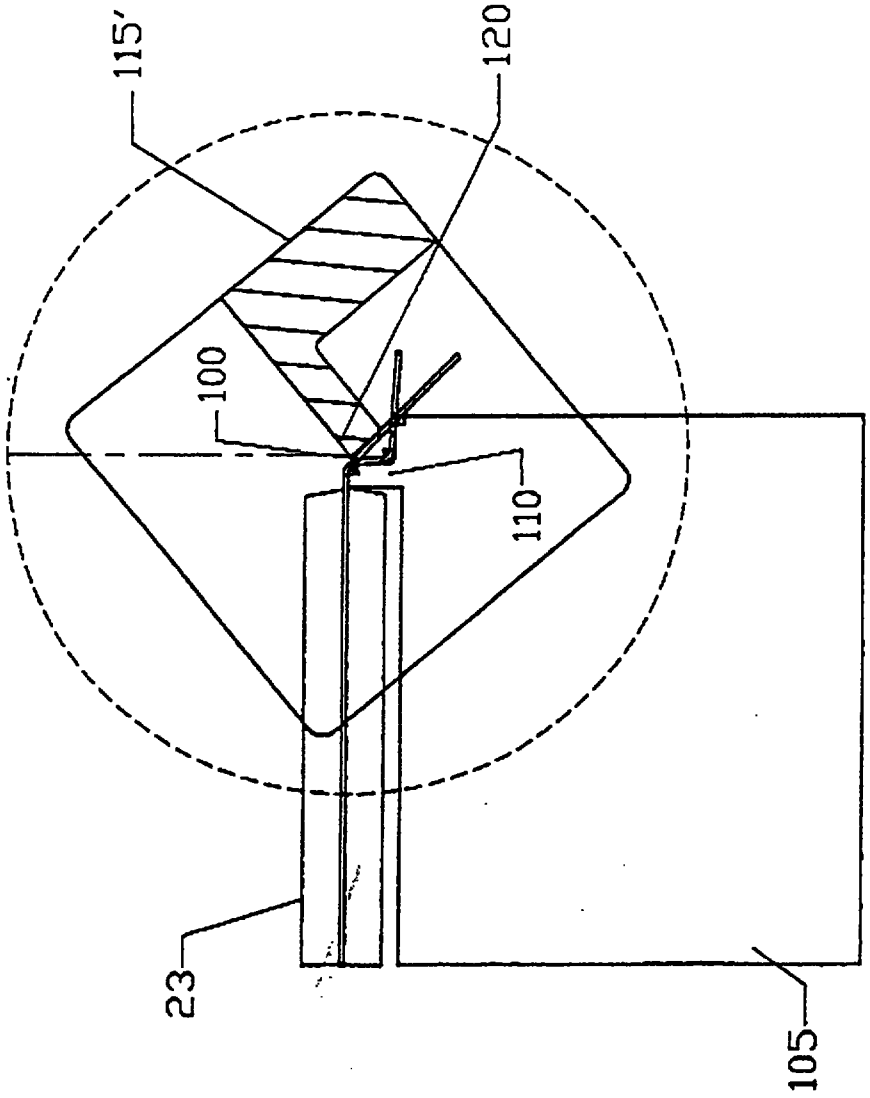

FIG 7B

This Sheet Has Been Replaced

THIS SHEET HAS BEEN REPLACED

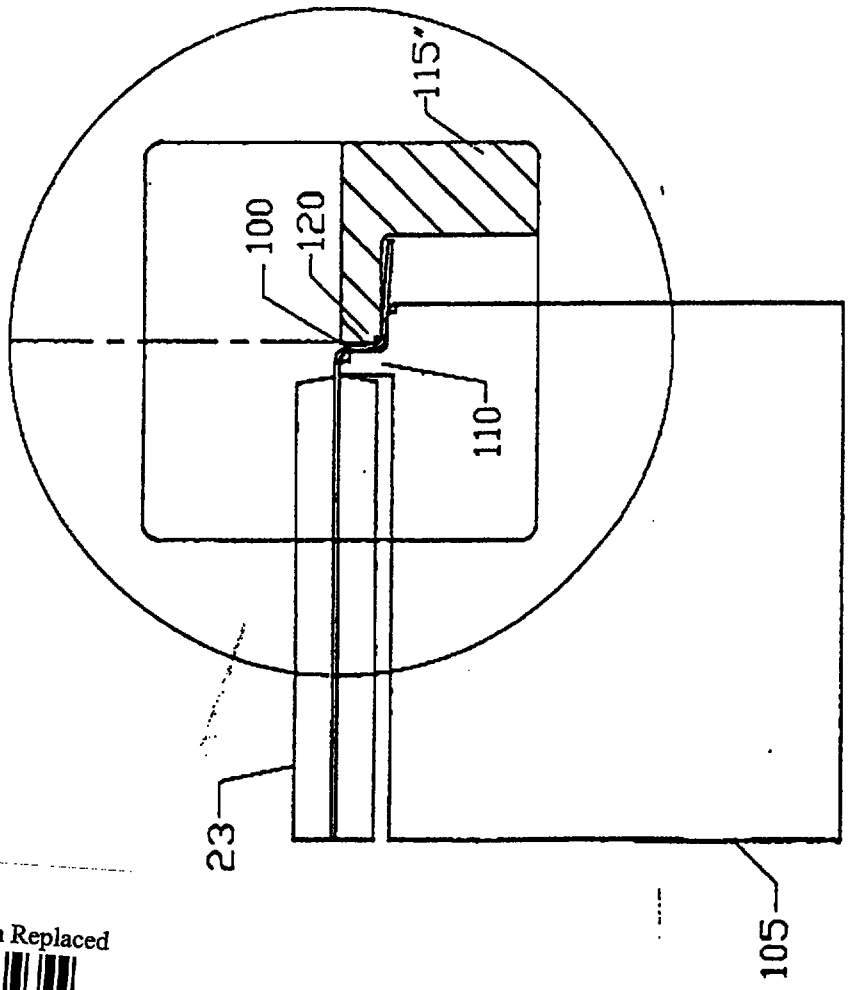

FIG. 7C

This Sheet Has Been Replaced

THIS SHEET HAS BEEN REPLACED

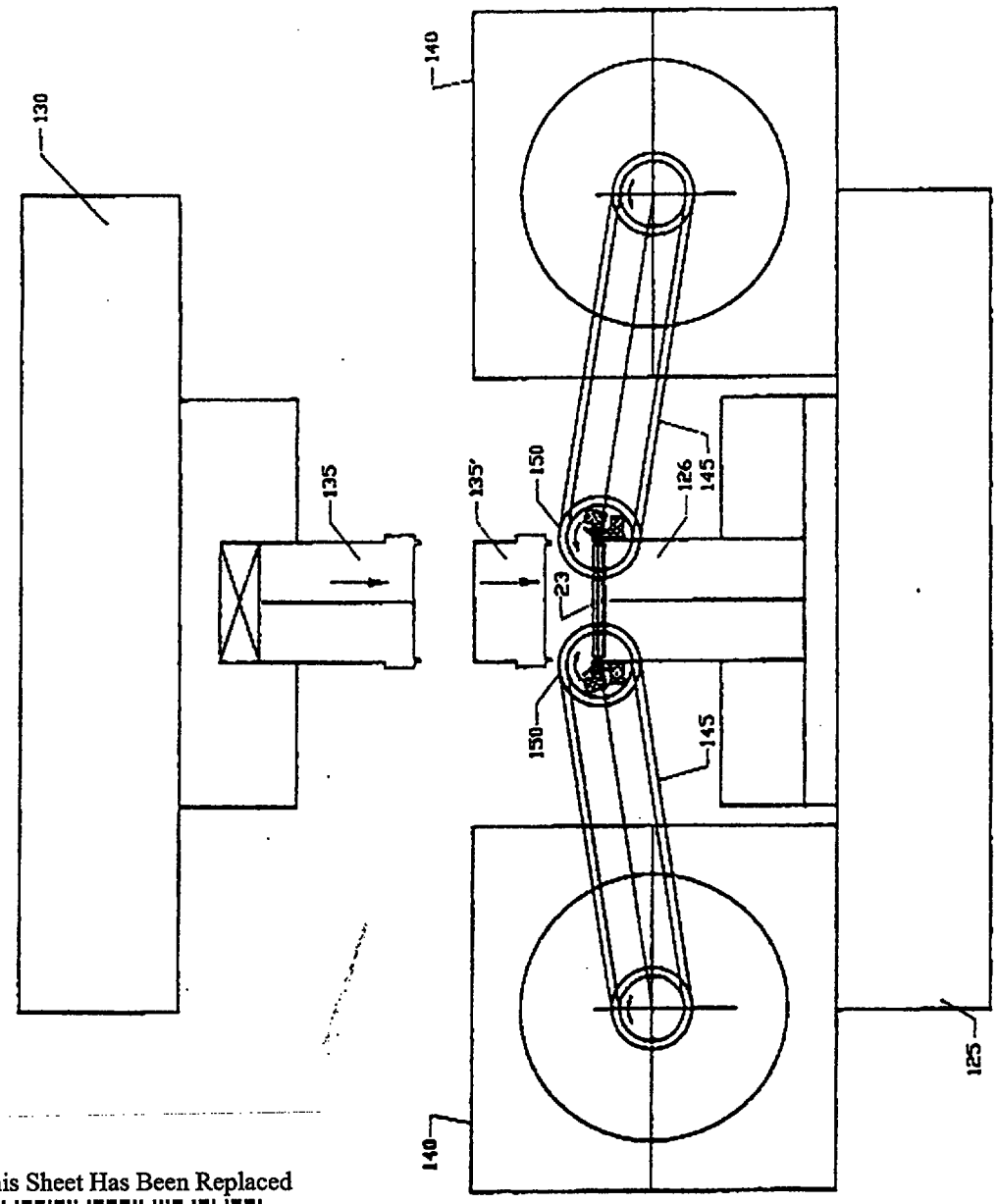

FIG 8

This Sheet Has Been Replaced



THIS SHEET HAS BEEN REPLACED

9602294-2
extra copy

REPLACEMENT SHEET
29 AUG 1996

A METHOD AND APPARATUS FOR FORMING LEADS OF SEMICONDUCTOR DEVICES USING A SINGLE POINT CONTACT SWING CAM

FIELD OF THE INVENTION

The present invention relates to a method and apparatus for shaping leads from a semiconductor package and more particularly to a method and apparatus for forming a row of leads in accordance to gull wing package specifications without scratching or damaging the surface of the leads.

BACKGROUND OF THE INVENTION

The semiconductor fabrication industry uses three methods and apparatii to form leads from semiconductor packages into gull wing packages: (1) solid punch forming, (2) multi-stage roller forming, and (3) swing cam forming.

Solid punch forming uses a punch in cooperative relationship with an anvil member to form the final lead shape of a gull wing package. This method of forming produces excessive scratches and gouging on the surface of the lead. Not only is frequent cleaning of the punches required because of the accumulation of solder due to the excessive scratches, but the quality of lead forming is poor and not uniform. Crevices between the lead and the package are common as a result of excessive punching forces exerted on the leads by the punch. Representative of solid punch forming are U.S. Pat. Nos 4,907,628 and 5,078,186.

Multi-stage roller forming employs a variety of rollers to form the leads over a fixed cam profile. The size of prior art roller construction in the die restricts this approach to forming only two sides of lead at any one time. As such, multi-stage forming is required to complete the final lead forming. The Uneven dam bar cutting in the first stage of roller forming often burrs the

REPLACEMENT SHEET
29 AUG 1996

surface of the leads, causing frequent jamming of the rollers. The uneven thickness of the leads can promote solder scratches off the lead surface as the clearance between the leads and the rollers is predetermined. An example of multi-stage roller forming is U.S. Pat. No. 4,829,669.

Swing cam forming relies on the swinging mechanism on the upper die that follows the lower die cam profile to form the gull wing package. Although scratches on the lead surface are reduced but they are not eliminated. Achieving the mean forming dimension of the gull wing package specification is impossible due to the cumulative errors of relative movements in the swing cam mechanism, uneven thickness of material and plating thickness and the spring back effect. An example of a swing cam forming is U.S. Pat. No. 3,416,348.

REPLACEMENT SHEET
29 AUG 1996

SUMMARY OF THE INVENTION

The present invention employs a programmable rotary cam to fold leads of a semiconductor package from their initial positions to their final specified shape without leaving any scratch mark except the initial cam punch radius mark at the foot area of the leads. The centre of cam rotation is determined by three contact points - the contact points of the cam punch with the lead at the final lead position, at the initial lead position and an intermediate lead position. Once the semiconductor package is clamped between the lower anvil and the upper clamping support, the rotary cam is lowered to a location corresponding the the centre of cam rotation. The cam punch rotates and guides the leads into its final form when the inner surface of the cam punch meets the outer surface of the lower anvil. The present invention thus eliminates scratch marks on the leads from semiconductor packages. The programmable cam punch of the present invention also achieves the mean of lead specification regardless of material and plating thickness of the lead. In the preferred embodiment of the present invention, the cam punch is coupled to a servo motor such that the spring back factor of the lead material can be detected and compensated.

REPLACEMENT SHEET
29 AUG 1996

BRIEF DESCRIPTION OF THE DRAWINGS

Fig. 1 illustrates the process of forming leads for a semiconductor package.

Fig. 2 is a typical mean specification for a gull wing package.

Fig. 3 shows a cross sectional view of a prior art solid punch forming for leads of a semiconductor package.

Fig. 4 illustrates a cross sectional view of a prior art swing cam forming for leads of a semiconductor package.

Fig. 5A is a cross sectional view of a prior art multi-stage roller forming for leads of a semiconductor package.

Fig. 5B is another cross sectional view of the final stage of the prior art multi-stage roller forming for leads of a semiconductor package in accordance to Fig. 5A.

Fig. 6 illustrates a cross sectional view of the single point forming for leads of a semiconductor in accordance to the present invention.

Fig. 7A shows a cross sectional view of the first stage of single point forming of the present invention.

Fig. 7B shows a cross sectional view of the second stage of single point forming of the present invention.

Fig. 7C shows a cross sectional view of the final stage of single point forming of the present invention.

Fig. 8 illustrates a cross sectional view of a programmable cam punch system of the present invention.

REPLACEMENT SHEET
29 AUG 1996

DESCRIPTION OF THE EMBODIMENT OF THE INVENTION

A method and apparatus for forming gull wing package without leaving scratch marks on the lead is described. In the following description, numerous specific details are set forth such as anvil and cam punch, etc. in order to provide a thorough understanding of the present invention. It will be obvious to one skilled in the art that the present invention may be practised without these specific details. In other instances, well-known parts such as those involved with servo motor and other portion of a semiconductor encapsulation system are not shown in order not to obscure the present invention.

Fig. 1 illustrates generally the process of forming leads for a semiconductor package after it emerges from the encapsulation process. Step 5 corresponds to the unit singulation process where the individual semiconductor package 23 and leads 30 are cut from the lead frame (not shown). Next, in step 10 the vertical lead forming occurs when the leads 30 are bent vertically. After the step 10, the package 23 proceeds to step 15 where the leads are either bent or rolled horizontally. Finally in step 20, the extra length of the leads 30 are cut to specification. It should be understood by one skilled in the art that steps 10, 15 and 20 are interchangeable, i.e., one step may occurs before the other.

Fig. 2 is a typical mean specification for a gull wing package. The semiconductor package 23 is shown cross sectionally having a top package 25, a bottom package 27 and the lead 30. By gull wing package the present invention refers to the mean specification for a variety of common standards in semiconductor fabrication and packaging. Throughout the specification, the semiconductor package is shown in an upright position and the lead in a dead bug configuration. It should be understood by one skilled in the art that the present invention is not limited to those configurations indicated for FIGs

REPLACEMENT SHEET
29 AUG 1996

1 - 8. In other words, the present invention is applicable in a variety of directions, including lead forming in a horizontal position or folding the leads in a live bug configuration.

Fig. 3 shows a cross sectional view of a prior art solid punch forming for leads of a semiconductor package. Solid punch forming uses a punch 35 in cooperative relationship with an anvil member 40 to form the final lead shape of a gull wing package. This method of forming produces excessive scratches and gouging on the surface 32 of the lead 30. Not only is frequent cleaning of the punches required because of the accumulation of solder due to the excessive scratches, but the quality of lead forming is poor and not uniform. Crevices between the lead 30 and the top package 25 and bottom package 27 are common as a result of excessive punching forces exerted on the leads by the punch surface 37. Moreover, the forming quality of the solid punch method depends on the material and plating thickness as well as the spring back effect of the leads. As the punch 35 and the anvil 40 are not modifiable, achieving the mean of gull wing package specification is difficult.

Fig. 4 illustrates a cross sectional view of a prior art swing cam forming for leads of a semiconductor package. Swing cam method features a lower die 45 having a cam profile 46 and an anvil face 47, and an upper die 50 having a clamping pad 49 and a swinging cam cum roller assembly 55. Swing cam forming relies on the swinging mechanism on the upper die that follows the lower die cam profile to form the gull wing package. Although scratches on the lead surface are reduced but they are not eliminated. Achieving the mean forming dimension of the gull wing package specification is impossible due to the cumulative errors of relative movements in the pivot point 57 and the roller 60 of the swing cam mechanism, uneven thickness of material and plating and the spring back effect of the leads.

REPLACEMENT SHEET
29 AUG 1996

Fig. 5A is a cross sectional view of a prior art multi-stage roller forming for leads of a semiconductor package. Just as swing cam forming, the package 23 is clamped between a lower anvil 65 and a top clamping pad 70. The anvil face 67 and punch surface 73 holds the lead 30 in the first stage of the forming process. A roller 75 bents the lead 30 vertically along the radii path 77. Fig. 5B is another cross sectional view of the final stage of the prior art multi-stage roller forming for leads of a semiconductor package in accordance to Fig. 5A. Here, a second roller 80 bents the vertical lead into a gull wing configuration when its moves from position 80 to 80'. The size of prior art roller construction in the die restricts this approach to forming only two sides of lead at any one time. As such, multi-stage forming is required to complete the final lead forming. The uneven dam bar cutting in the first stage of roller forming often burrs the surface of the leads, causing frequent jamming of the rollers. The uneven thickness of the leads can promote solder scratches off the lead surface as the clearance between the leads and the rollers is predetermined.

Fig. 6 illustrates a cross sectional view of the single point forming for leads of semiconductor package in accordance to the present invention. The package 23 with one of its leads is shown being clamped between a lower anvil and a clamping pad (both not shown in Fig. 6 in order not to obscure the description of the present invention). The single point forming of the present invention calls for the user to determine a first contact point 85 on the lead where the lead touches the cam punch at the final lead form. In the preferred embodiment of the present invention, the final lead form can be traced on a computer aided design (CAD) system using the profile of the anvil surface as a reference. Secondly, the user determines a second contact point 90 on the lead where the lead touches the cam punch at the initial lead form. In the preferred embodiment of the present invention, the initial lead form is where

REPLACEMENT SHEET
29 AUG 1996

the lead extends outwardly from the package without being bent or fold by the cam punch. Just as the first contact point 85, this second contact point may be derived on a CAD system. Thirdly, the user determines a third contact point 95 at an intermediate lead position between that of the final lead position and the initial lead position. In the preferred embodiment of the present invention, an angle of 45 degrees has being chosen as the derivation on the CAD system is straight forward. It should be understood by one skilled in the art that any intermediate lead position can be used to derived the location of the third contact point. With the three contact points 85, 90 and 95, a centre of cam rotation 100 can be determined in a straight forward manner.

The centre of cam rotation 100 shall be the pivoting centre around which the cam punch (shown in Fig. 7A, 7B and 7C) rotates and fold the lead 30 to the final lead position. As the contact points 85, 90 and 95 represents the same location which the cam punch is in contact with the lead, only one single punch mark is made on the lead while forming the gull wing package. The centre of cam rotation is an imaginary centre unique for leads of different material and plating thickness, spring back effect of the lead and mean specification. By requiring the cam punch to rotate around the centre of cam rotation, the present invention minimizes the number of scratch marks made on the lead while forming it according to the mean specification. Moreover, the spring back effect of the leads are also compensated.

Fig. 7A shows a cross sectional view of the first stage of single point forming of the present invention. The package 23 with its lead 30 is shown being clamped against the the anvil surface 110 and a clamping pad (not shown for clarity purpose). Referring to Fig. 7A, the centre of cam rotation 100 has been ascertained by the method outlined in the description for Fig. 6. Here, a cam punch 115 is positioned such that its edge 116 is in contact with

REPLACEMENT SHEET
29 AUG 1996

the lead 30 at the bending point 33. Fig. 7B shows a cross sectional view of the second stage of single point forming of the present invention. The cam punch 115' is rotated around the centre of cam rotation 100 into an intermediate point between the initial lead position and the final lead position. Note that the cam punch has only made one punch mark, i.e., bending point 33, on the lead as it fold the lead into a gull wing configuration. Referring again to Fig. 7B, the centre of cam rotation 100 is superimposed over the bending point 33. As such, the bending point 33 is not illustrated in order not to cluster the drawing. Finally, Fig. 7C shows a cross sectional view of the final stage of single point forming of the present invention. Here, the cam punch 115" folds the lead into close proximity with the outer surface of the anvil surface 110. Once again, the punch mark on the lead remain the initial punch mark made on or at the bent point 33 of the lead.

Fig. 8 illustrates a cross sectional view of a programmable cam punch system of the present invention. The programmable cam punch system comprises a lower die 125 having an anvil 126, an upper die 130 having a clamping pad 135, servo motors 140, timing belt 145 and cam punches 150. The anvil 126 and the clamping pad 135 are for holding the package between the the lower and upper die so that the leads are exposed outwardly. While the centre of cam rotation 100 is determined by the system, the servo motor 140 engages the cam punch 150 over the timing belt 145 to rotate around the centre of rotation 100. The servo motor 140 is preferably coupled to a computer for forwarding information regarding the material and plating thickness of the lead. Furthermore, data on the spring back effect of the lead can also be monitored and compensated as the cam punches 150 fold the leads into their final lead position. In Fig. 8 only two servo motors 140 are shown. In the preferred embodiment of the present invention, there are four servo motors - one for each side of the semiconductor package.

REPLACEMENT SHEET
29 AUG 1996

Furthermore, the activation of the servo motor is coordinated with the lowering of the clamping pad such that all the leads from any semiconductor package can be folded in one clamp-and-rotate motion of the programmable cam punch system of the present invention.

While the present invention has been described particularly with reference to FIGS. **1** to **8** with emphasis on a method to recognize speech automatically in a computer environment, it should be understood that the figures are for illustration only and should not be taken a limitation on the invention. In addition, it is clear that the method and apparatus of the present invention has utility in many applications where automatic speech recognition is required. It is contemplated that many changes and modifications may be made by one of ordinary skill in the art without departing from the spirit and the scope of the invention as described.

REPLACEMENT SHEET

29 AUG 1996

CLAIMS

1. A method for forming leads for semiconductor package in a semiconductor encapsulation process, said system including at least an anvil and clamping block for clamping the leads from said package, said method comprising

moving at least one rotary cam to an imaginary centre of cam rotation, said centre being equidistant from at least three contact points, said contact points corresponding to the initial point of contact between the rotary cam and the lead, the final point of contact between the rotary cam and the lead and an intermediate point of contact between the initial point of contact and the final point of contact ; and

rotating said rotary cam to the final lead position without creating more than one punch mark on said lead.

2. The method according to claim 1 wherein said final lead position conforms with gull wing configuration.

3. The method according to claim 1 wherein said rotary cam is actuated by a servo motor.

4. The method according to claim 3 wherein said servo motor is coordinated with the motion of said clamping block for forming leads of semiconductor package in at most one clamp-and-rotate motion.

5. A method for forming leads of a semiconductor package without creating more than one punch mark on the leads as hereinbefore described with reference to or as shown in the accompanying drawings.

REPLACEMENT SHEET
29 AUG 1996

ABSTRACT

A METHOD AND APPARATUS FOR FORMING LEADS OF SEMICONDUCTOR DEVICES USING A SINGLE POINT CONTACT SWING CAM

The present invention employs a programmable rotary cam to fold leads of a semiconductor package from their initial positions to their final specified shape without leaving any scratch mark except the initial cam punch radius mark at the foot area of the leads. The centre of cam rotation is determined by three contact points - the contact points of the cam punch with the lead at the final lead position, at the initial lead position and an intermediate lead position. Once the semiconductor package is clamped between the lower anvil and the upper clamping support, the rotary cam is lowered to a location corresponding the the centre of cam rotation. The cam punch rotates and guides the leads into its final form when the inner surface of the cam punch meets the outer surface of the lower anvil. The present invention thus eliminates scratch marks on the leads from semiconductor packages. The programmable cam punch of the present invention also achieves the mean of lead specification regardless of material and plating thickness of the lead. In the preferred embodiment of the present invention, the cam punch is coupled to a servo motor such that the spring back factor of the lead material can be detected and compensated.

Figure 7A

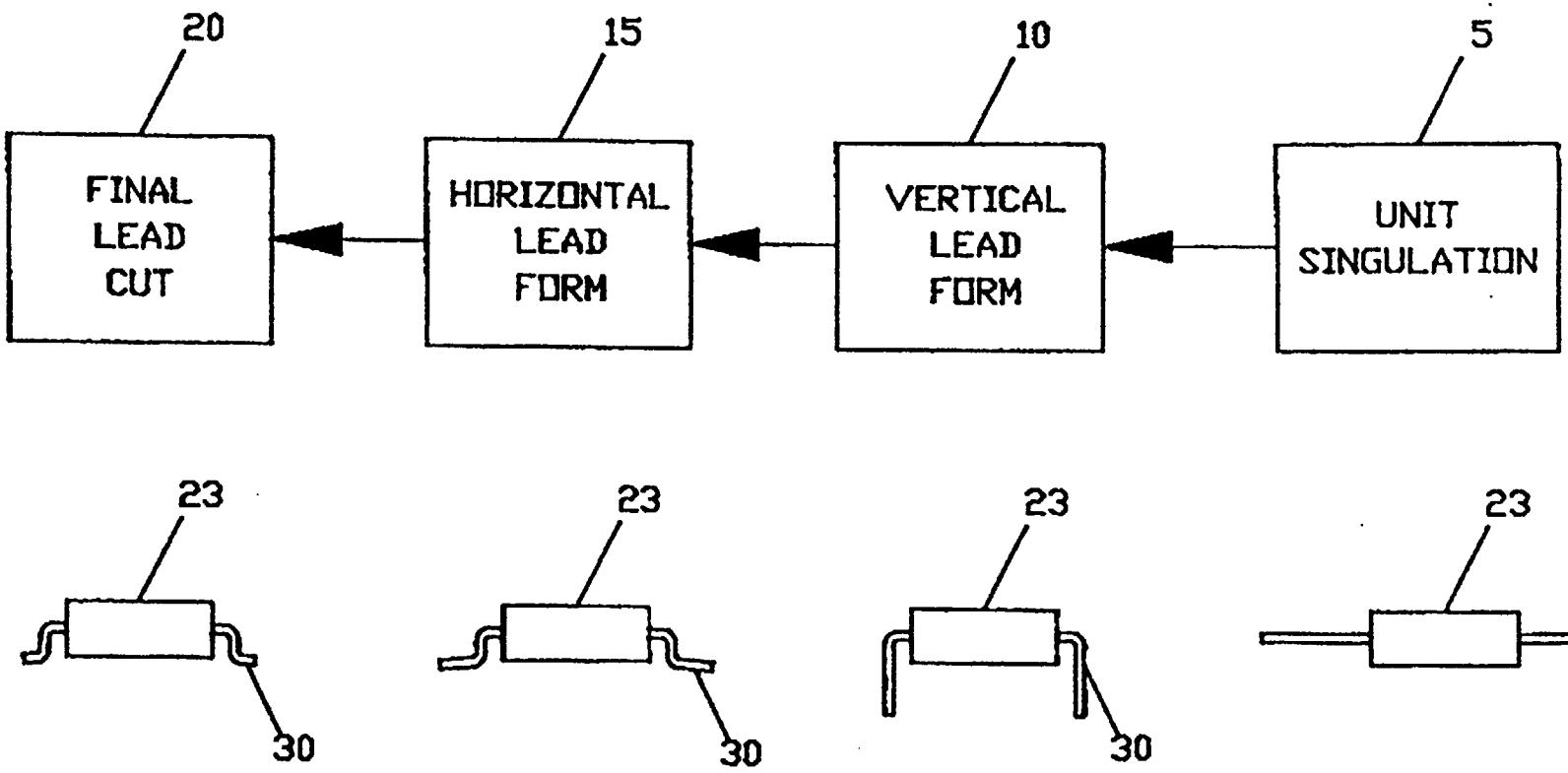

FIG. 1

REPLACEMENT SHEET
29 AUG 1996

REPLACEMENT SHEET
29 AUG 1996

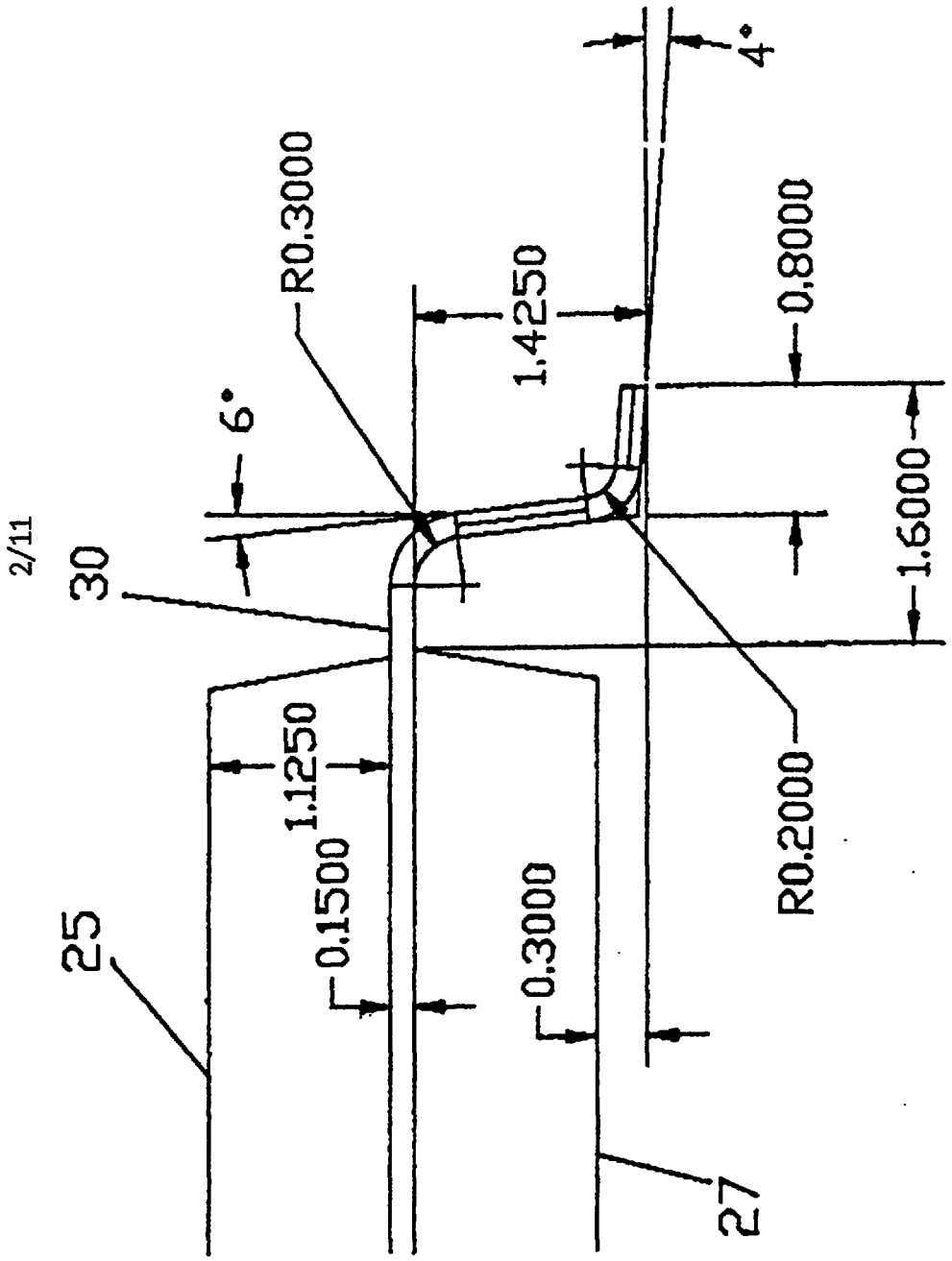

FIG.2

REPLACEMENT SHEET
29 AUG 1996

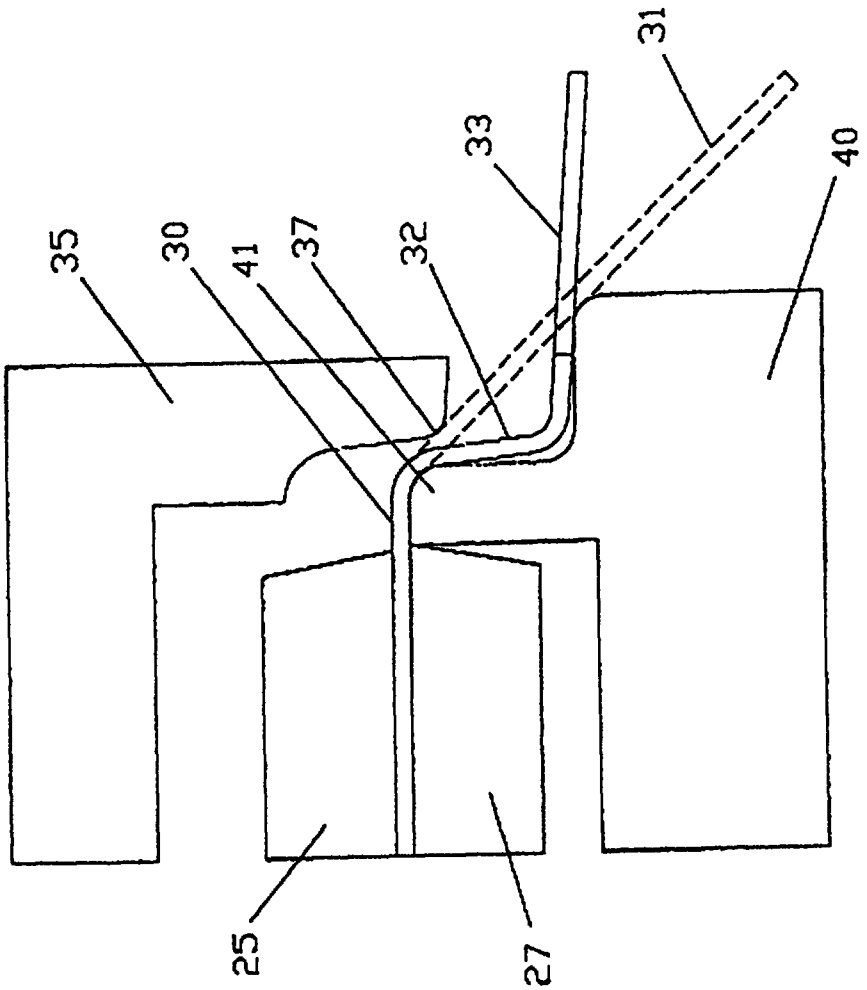

FIG.3 (PRIOR ART)

REPLACEMENT SHEET
29 AUG 1996

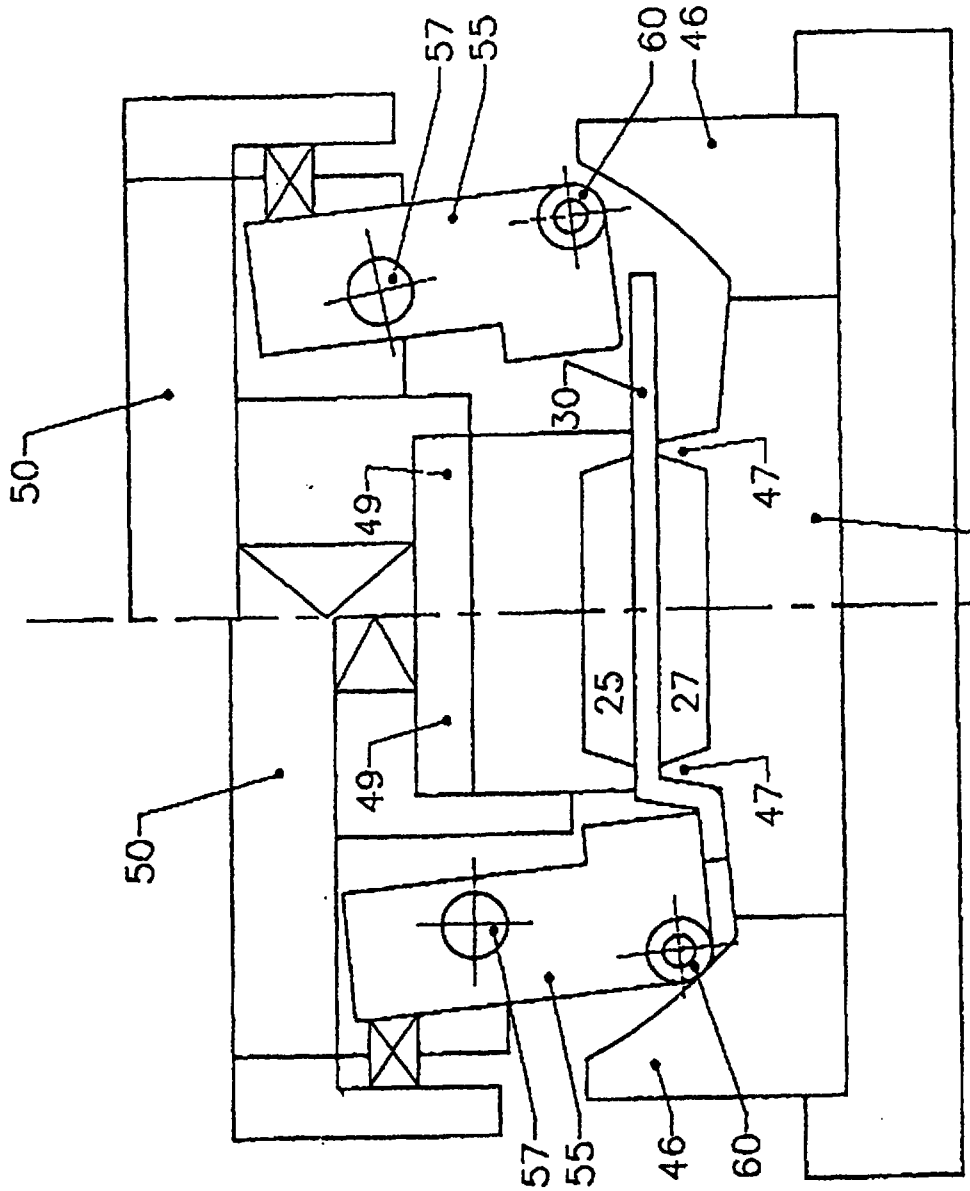

FIG 4 (PRIOR ART)

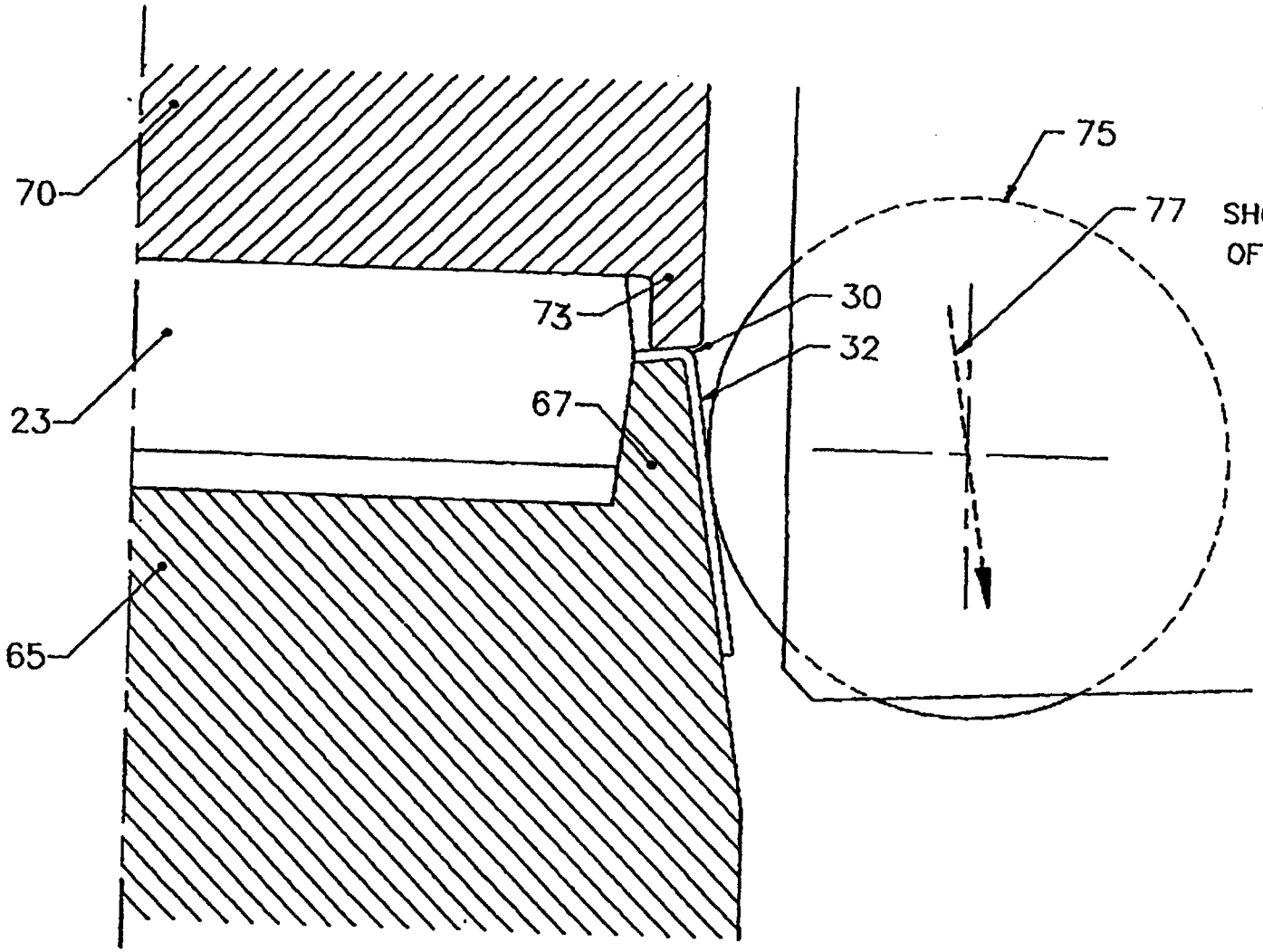

FIG 5A (PRIOR ART)

REPLACEMENT SHEET
29 AUG 1996

REPLACEMENT SHEET
29 AUG 1996

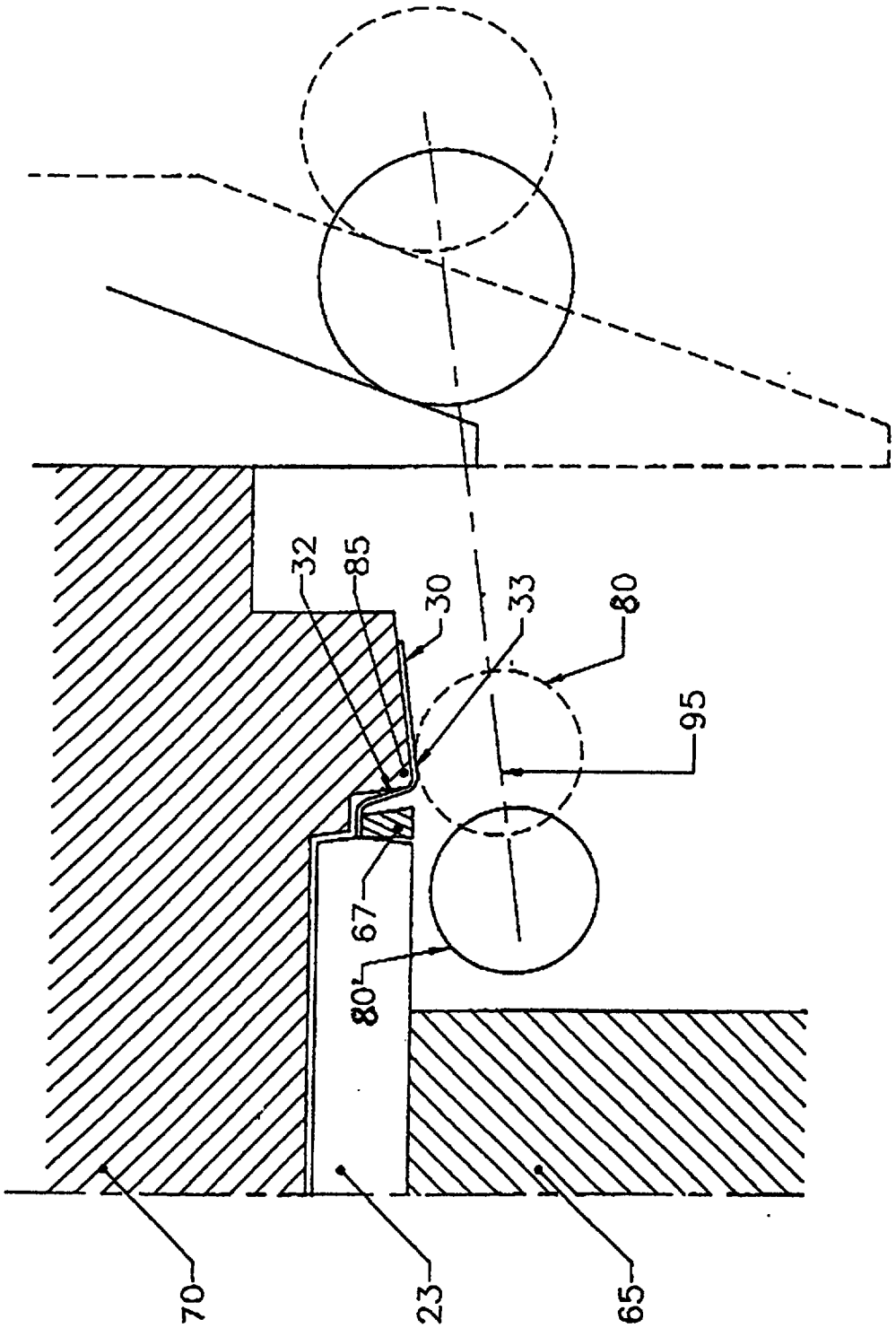

FIG 5B (PRIOR ART)

REPLACEMENT SHEET
29 AUG 1996

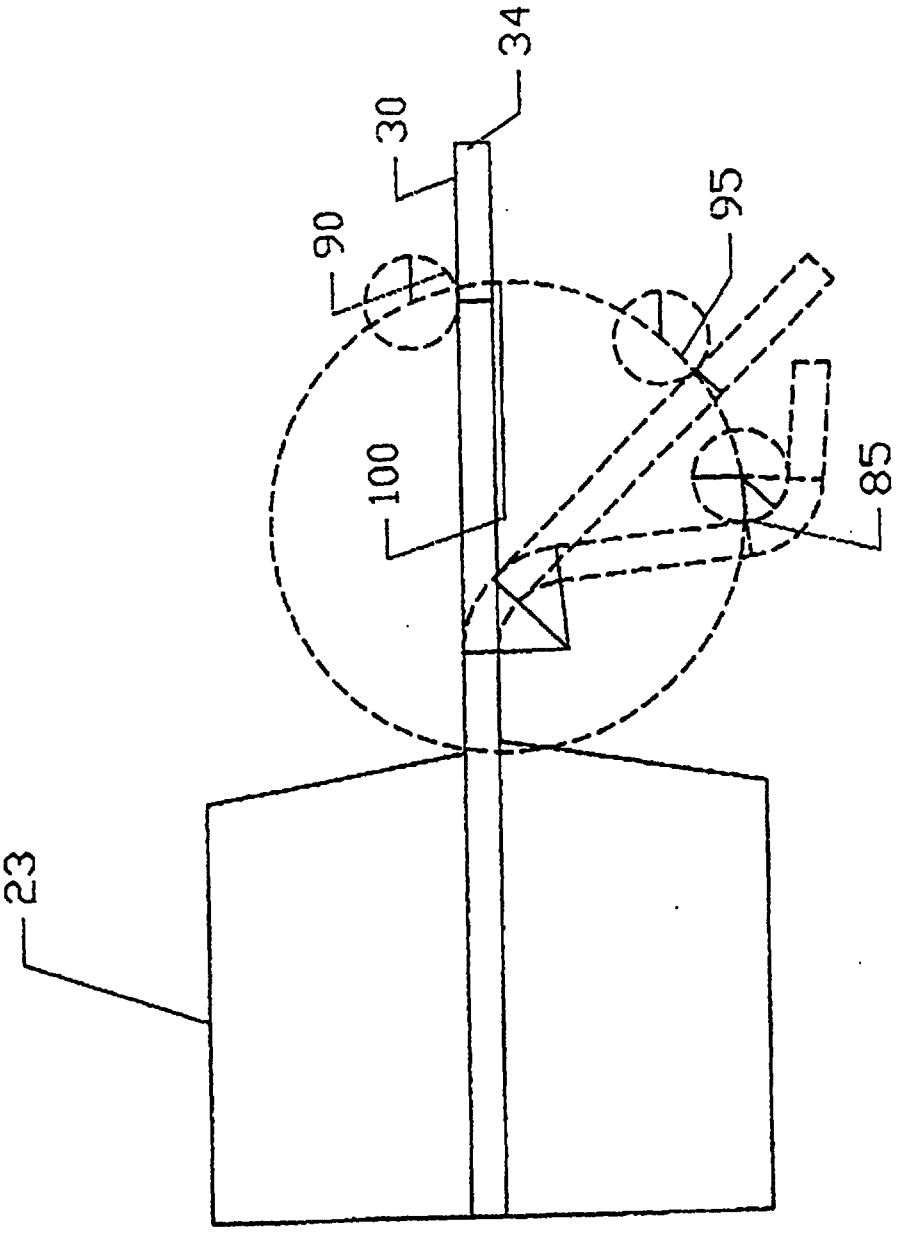

FIG.6

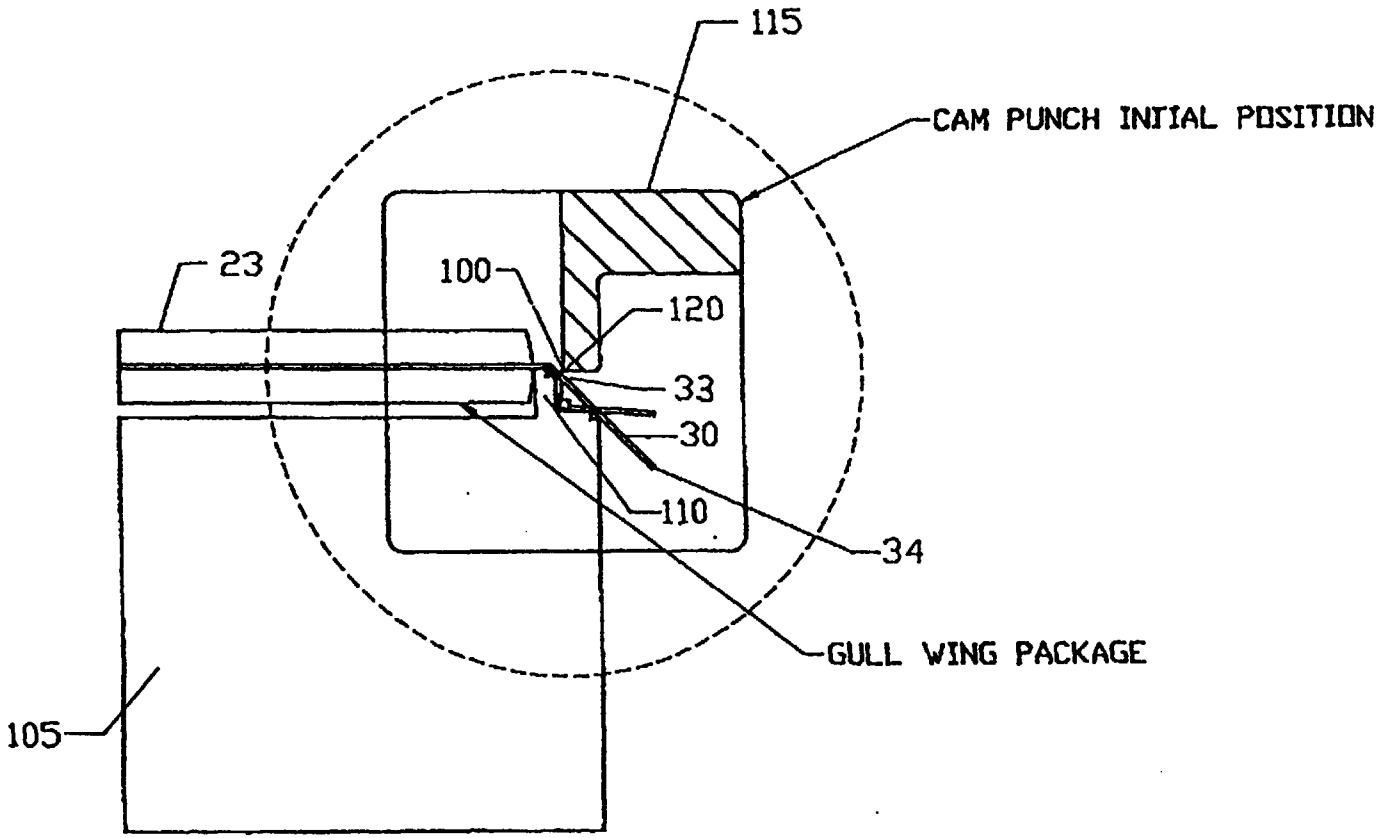

FIG 7A

REPLACEMENT SHEET
29 AUG 1996

REPLACEMENT SHEET
29 AUG 1996

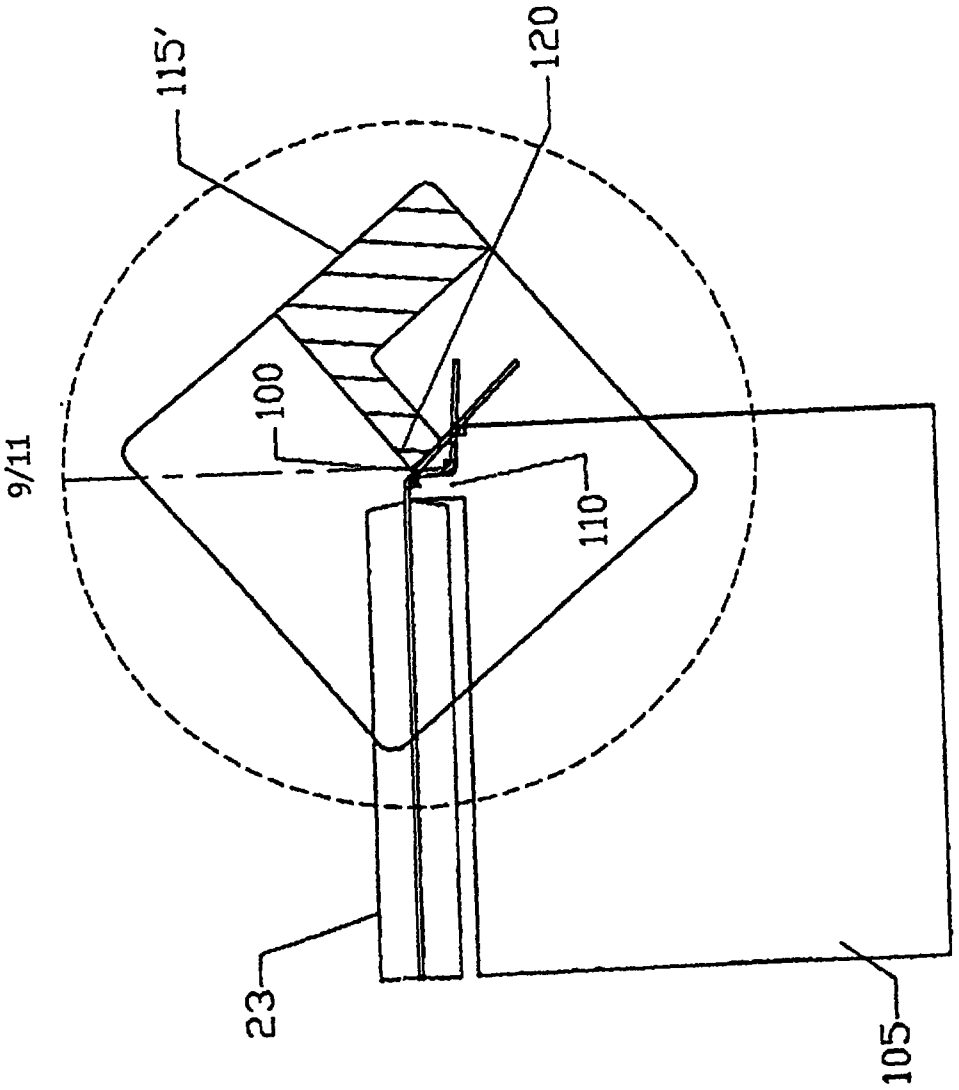

FIG 7B

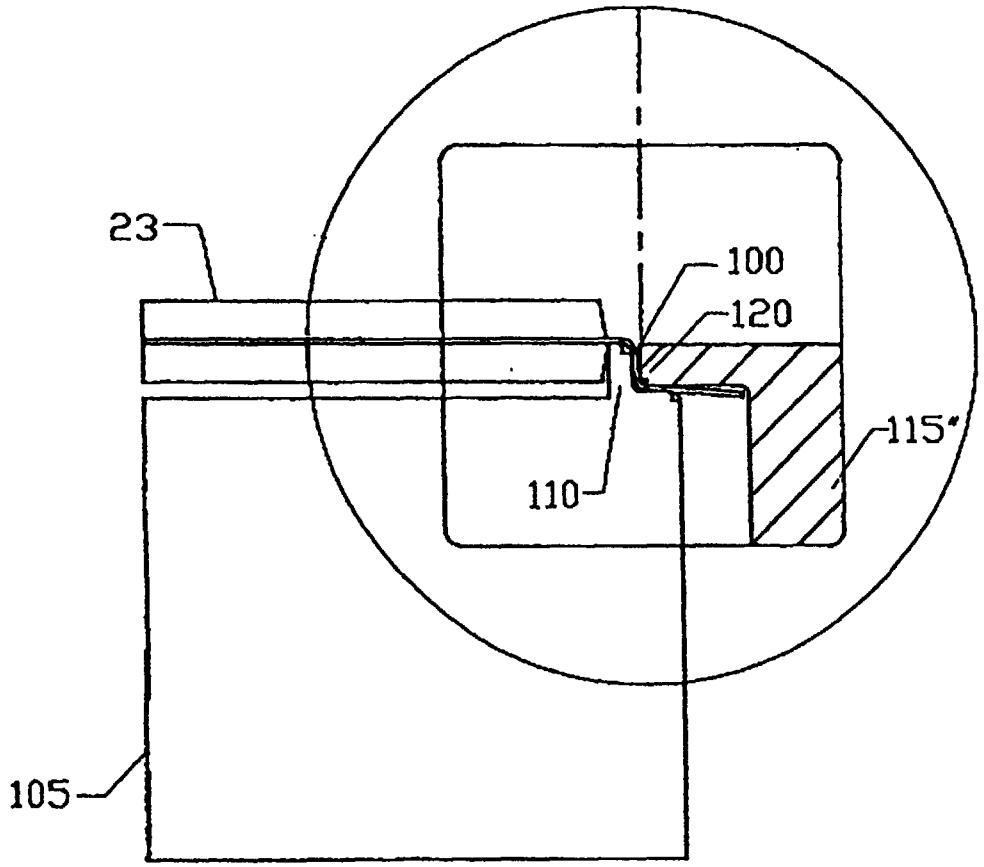

FIG. 7C

REPLACEMENT SHEET
29 AUG 1996

REPLACEMENT SHEET
29 AUG 1996

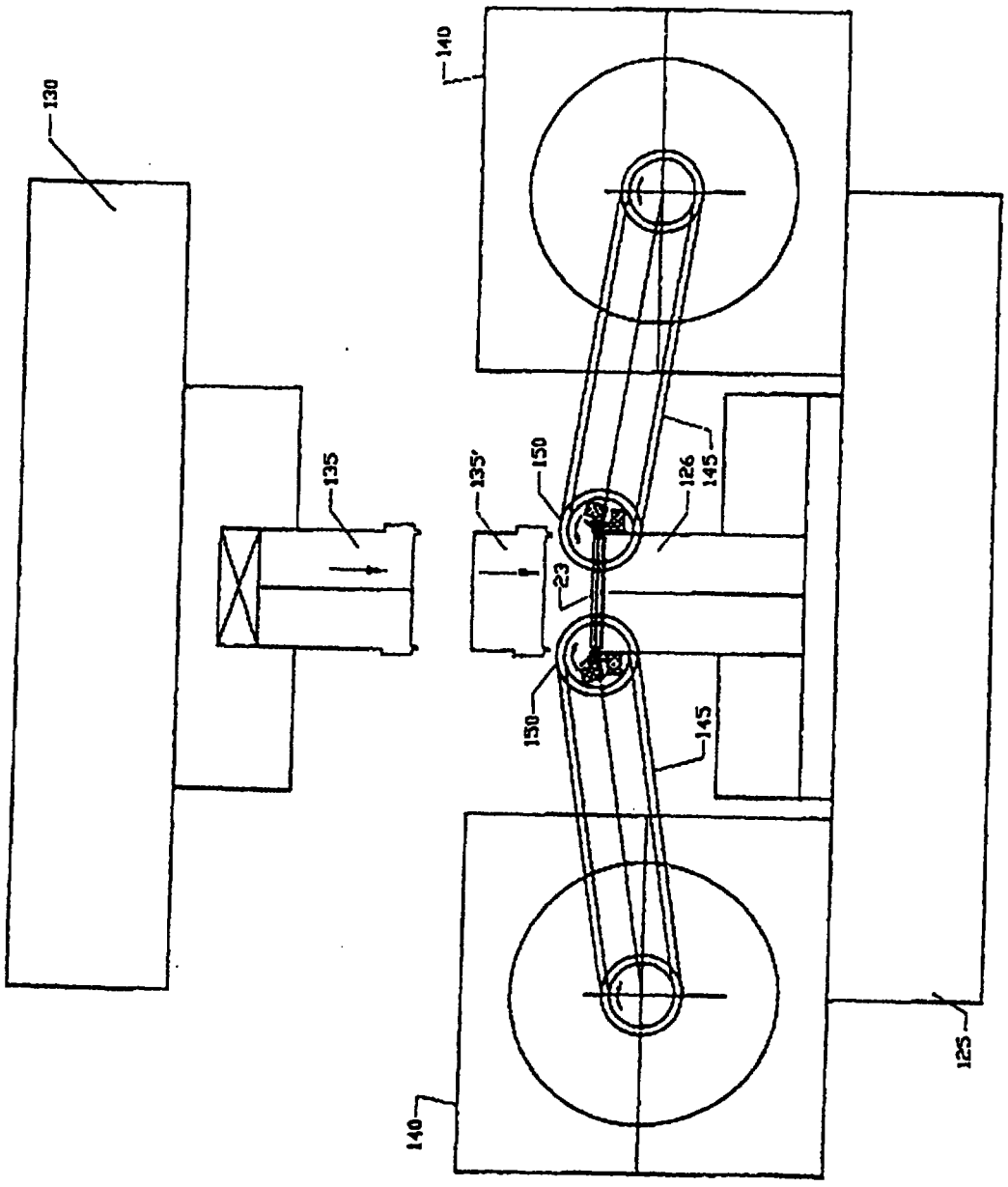

FIG 8