IPOS COPY
9702888-0

THIS SHEET HAS BEEN REPLACED

ELECTRONIC MUSICAL INSTRUMENT

This Sheet Has Been Replaced

BACKGROUND OF THE INVENTION

Field of the Invention

The present invention relates to an electronic musical instrument which is suitable for synthesizing a desirable musical tone by combining plural sounds.

Prior Art

Recently, there are developed several kinds of electronic musical instruments each of which activates a simulation model of a tone-generation mechanism of a non-electronic musical instrument so as to synthesize its musical tone. Such music synthesis technique is disclosed in the papers such as U.S. Patent Nos. 4,984,276 and 4,130,043. Herein, there is disclosed an electronic musical instrument which simulates a tone-generation mechanism of the wind instrument such as the clarinet. In addition, the above-mentioned papers also disclose about the electronic musical instruments which simulate tone-generation mechanisms of the string-plucking-type instrument such as the guitar and string-striking-type instrument such as the piano.

Meanwhile, currently produced electronic musical instrument may provide plural FM sound sources called "operators". By arbitrarily combining some of these operators, a desirable musical tone is to be synthesized. In addition, the above-mentioned electronic musical instrument provides a liquid crystal display (i.e., "LCD") which displays the combining state or connecting manner of these operators. This combining state of the operators is called

THIS SHEET HAS BEEN REPLACED

"algorithm" which is an important element for determining the tone color of the musical tone to be generated. By use of this algorithm, the user of this electronic musical instrument can acknowledge the physical combination of the sound sources. Therefore, by changing the contents of this algorithm, it is possible to carry out the sound synthesis or sound composition with ease.

When applying the above-mentioned function to the conventional electronic musical instrument which simulates the tone-generation mechanism of the non-electronic musical instrument, it is possible to carry out the varied sound synthesis by arbitrarily combining some of the tone-generation mechanisms of the non-electronic musical instruments. However, when using the different musical instrument to be simulated, such electronic musical instrument must require completely different tone-generation algorithm of its operation parameters. For this reason, when carrying out the sound synthesis by freely using several kinds of the tone-generation mechanisms, it is required for the user to have the expert knowledge concerning the tone-generation mechanism of the instrument itself to be simulated. This is difficult for the non-professional user who does not have the expert knowledge about the musical instrument, because such user cannot figure out the setting manner of the algorithm or operation parameters. Thus, there is a problem in that the sound synthesis is very difficult for the users.

This Sheet Has Been Replaced

SUMMARY OF THE INVENTION

THIS SHEET HAS BEEN REPLACED

It is accordingly a primary object of the present invention to provide an electronic musical instrument which can carry out the sound synthesis by freely using several kinds of the tone-generation mechanisms of the non-electronic musical instruments with ease.

The invention is defined by the appended independent claim 1, with advantageous embodiment given by the dependent claims.

This Sheet Has Been Replaced

THIS SHEET HAS BEEN REPLACED

BRIEF DESCRIPTION OF THE DRAWINGS

Further objects and advantages of the present invention will be apparent from the following description, reference being had to the accompanying drawings wherein the preferred embodiment of the present invention is clearly shown.

In the drawings:

Fig. 1 is a block diagram showing the whole configuration of an electronic musical instrument according to an embodiment of the present invention;

Fig. 2 is a block diagram showing a detailed configuration of a sound source shown in Fig. 1;

Fig. 3 is a system diagram showing a connection manner of DSPs used in the sound source shown in Fig. 2;

Fig. 4 is a flowchart showing a main routine of an operation of the present embodiment to be executed;

Fig. 5 is a flowchart showing an algorithm selection routine;

Fig. 6 is a flowchart showing a device selection routine;

Fig. 7 illustrates an example of a screen image of an initial menu which is displayed by the present embodiment when the algorithm selection routine is started;

Fig. 8 illustrates an example of a screen image for the device selection to be displayed when the device selection routine is started;

Fig. 9 is a flowchart showing a parameter setting routine;

This Sheet Has Been Replaced

Figs. 10 to 13 are drawings each illustrating an example of a screen image to be displayed when the parameter setting routine is executed;

Fig. 14 is a flowchart showing a play routine;

Fig. 15 is a flowchart showing a sub-routine of the play routine which is used for explaining a drive portion control routine, a tone-generation portion control routine and a resonance-radiation portion control routine to be executed during execution of the play routine;

Fig. 16 shows a conceptual configuration of internal registers of each DSP; and

Fig. 17 is a flowchart showing a preset call routine.

DESCRIPTION OF THE PREFERRED EMBODIMENT

Now, description will be given with respect to an embodiment of the present invention by referring to the drawings.

[A] Configuration

Fig. 1 is a block diagram showing the whole configuration of an electronic musical instrument according to an embodiment of the present invention. In Fig. 1, 1 designates a control portion which controls several portions of this instrument in real-time manner. This control portion 1 consists of a central processing unit (CPU) 1a, a program read-only memory (ROM) 1b, a data ROM 1c and a work random-access memory (RAM) 1d. The CPU 1a up-loads programs read from the program ROM 1b, and then it executes the loaded programs so as to control several portions. In the present specification, its operations will be described later. In

addition to several kinds of control programs to be used by the CPU 1a, the program ROM 1b memorizes other kinds of micro-programs to be loaded to the digital signal processor (DSP), which operation will be described later. Further, the data ROM 1c stores data tables which are used for the data conversion. Furthermore, the work RAM 1d is used as the work area of the CPU 1a, so that it temporarily stores several kinds of data. Meanwhile, 2 designates a performance input device which contains performance input elements such as the keyboard and wheel so as to create performance information corresponding to the operation to be made thereto by the performer. In addition, 3 designates several kinds of control elements such as the slide volume-controls and key switches which are arranged on the control panel (not shown). Further, 4 designates a display unit which is configured as the LCD and the like, so that it is designed to display the contents of several kinds of data given from the foregoing control portion 1.

5 designates a sound source which simulates the tone-generation mechanism of the non-electronic musical instrument, e.g., wind instrument such as the clarinet, string-bowing-type instrument such as the violin, string-plucking-type instrument such as the guitar and string-striking-type instrument such as the piano. This sound source 5 contains a drive unit 6, a tone-generation unit 7 and a resonance-radiation unit 8. Each of them is configured by "DSP" and "RAM", wherein "RAM" temporarily stores several kinds of operation data of "DSP". Incidentally, configuration and operation of these units 6-8 will be

described later. Meanwhile, 9 designates a digital-to-analog converter which converts the digital musical tone signal outputted from the sound source 5 into the corresponding analog signal. Further, 10 designates a sound system which generates a musical tone corresponding to the musical tone signal supplied thereto. Furthermore, 11 designates a pointing device made by the mouse-type device and the like. This pointing device 11 is used to point out the predetermined position in the display area of the display unit 4.

Next, detailed description will be given with respect to the above-mentioned sound source 5 by referring to Figs. 2 and 3. Fig. 2 is a block diagram showing a functional configuration of the sound source 5, wherein parts corresponding to those shown in Fig. 1 will be designated by the same numerals. In Fig. 2, CT designates a control table to be set in the predetermined memory area of the foregoing data ROM 1c. This control table CT is used to convert the performance information, supplied thereto via the CPU 1a, into sound source parameters. The drive unit 6 generates an excitation signal corresponding to the instrument to be simulated, and this excitation signal is supplied to the tone-generation unit 7. This excitation signal corresponds to the energy which is required for the tone generation. For example, when this drive unit 6 is designed to simulate the wind instrument such as the clarinet, this excitation signal corresponds to the blowing pressure or Embousure. In drive unit 6, 6a designates a drive DSP which embodies the function of the drive unit 6. This drive DSP 6a is supplied with

micro-programs corresponding to the operation manner of the instrument to be simulated. Thus, the drive DSP 6a creates the excitation signal corresponding to the sound source parameters to be set to its internal registers R1-R4. In the drive unit 6, two filters 6b, 6b are respectively provided on the output line and feedback line coupled to the tone-generation unit 7. Each of these filters is provided for avoiding an anomalous oscillation of the signal passing therethrough at the specific frequency. Herein, filter coefficients of these filters, i.e., their frequency characteristics are controlled by the drive DSP 6a. Further, two buffers 6c, 6c shape waveforms of the stereo musical tone signal (i.e., "Lout" and "Rout" signals) outputted from the drive DSP 6a.

The tone-generation unit 7 corresponds to the vibration source of the instrument to be simulated, which consists of a tone-generation DSP 7a, filters 7b, 7b, and buffers 7c, 7c. The tone-generation DSP 7a is supplied with the micro-programs which correspond to the operation manner of the instrument to be simulated. Further, it oscillates the excitation signal in response to the sound source parameters set to the internal registers R1-R4. The filters 7b, 7b are designed to simulate the frequency characteristic corresponding to the case where the musical tone sounded from the tone-generation portion of the actual instrument is transmitted toward the resonance-radiation portion or it is reflected by the resonance-radiation portion and then returned back to the tone-generation portion.

The resonance-radiation portion 8 embodies the resonance

and radiation characteristics of the instrument to be simulated, which consists of a resonance-radiation DSP 8a and buffers 8b, 8b. This resonance-radiation DSP 8a is supplied with the micro-programs corresponding to the operation manner of the instrument to be simulated. Further, it simulates the resonance-radiation characteristic corresponding to the sound source parameters set to the internal registers R1-R4.

Next, detailed description will be given with respect to configurations of the internal registers R1-R4 provided in each of the DSPs 6a, 7a, 8a by referring to Fig. 16. In Fig. 16, 40-42 designate internal register portions of the drive DSP 6a, tone-generation DSP 7a and resonance-radiation DSP 8a respectively. Each of these internal register portions 40-42 is divided into four registers R1-R4, each of which is set with control parameter CP, control device CD and control table CT. This control parameter CP is the data which designates the operation of the instrument to be simulated. For example, when the drive DSP 6a is designed to simulate the string-bowing-type instrument such as the violin, data representing the bowing velocity is set to CP(11) and data representing the bowing pressure is set to CP(12). On the other hand, the control device CD indicates the number of the performance input element by which the performance information is supplied to No.s (where s= 1-4) register of each DSP. The control table CT is used to carry out the "scaling" on the performance information supplied from the performance input element designated by the control device data CD.

In the sound source 5 which is configured as described

above, the excitation signal outputted from the drive unit 6 is subject to the oscillation in the tone-generation unit 7, and the oscillated signal is supplied to the resonance-radiation unit 8. In this resonance-radiation unit 8 which simulates the reflection terminal of the actual instrument, the oscillated signal is converted into the feedback signal which is then returned to the unit 6 via the unit 7. In the above-mentioned circulating of the signal, the musical tone signal is to be formed. This musical tone signal is outputted from the output terminals Lout, Rout of each of the DSPs 6a, 7a, 8a. Then, all of the musical tone signals are added and mixed together in mixers 13, and consequently it is possible to output the musical tone signal having the stereophonic components.

Next, Fig. 3 is a system diagram for explaining the data communication to be performed among the DSPs. Each of the DSPs 6a, 7a, 8a has the communication port having four channels by which 4-channel communication is carried out in time sharing manner. As shown in Fig. 3, the data communication is made in the predetermined order from "slot 1" to "slot 4" in time sharing manner. At first timing corresponding to slot 1, the excitation signal outputted from "DSP6a(OUTI)" is supplied to "DSP7a(INJ)" via a mixer 15, while the oscillated signal is supplied to "DSP7a(INK)" from "DSP7a(OUTJ)".

At next timing of slot 2, the foregoing feedback signal from "DSP8a(FBOK)" is supplied to "DSP7a(FBJ)" via the mixer 15, while it is returned from "DSP7a(FBOJ)" to "DSP6a(FBI)". Thus, the signal circulating is made in the closed-loop.

Such signal circulation is made at timings of slots 3 and 4.

At timing of slot 3, the musical tone signal corresponding to the stereophonic left-channel component is outputted from "DSP6a(Lout)", and it is inputted into "DSP7a(Lin)" via the mixer 15. Then, it is supplied from "DSP7a(Lout)" to "DSP8a(Lin)". Thereafter, the final musical tone signal is outputted from "DSP8a(Lout)". In this process, the DSP 7a adds the signal oscillated therein to the input signal, while the DSP 8a adds the signal oscillated therein to the output signal of DSP 7a. Thus, function of the foregoing mixer 13 can be achieved. At next slot 4, as similar to slot 3, the musical tone signal corresponding to the stereophonic right-channel component is to be formed.

[B] Operation

Next, description will be given with respect to the operation of the present embodiment by referring to Figs. 4 to 17. First, when the power is on in the electronic musical instrument according to the present embodiment, main routine as shown in Fig. 4 is activated, so that processing of the CPU 1a proceeds to step SA1. In step SA1, several kinds of registers are reset, so that initialization is carried out. In next step SA2, the CPU 1a inputs switch setting information for the mode designation switch which is contained in the foregoing control elements 3 in order to designate the operation mode of the present electronic musical instrument. As the operation modes, there are provided "play mode" (i.e., mode 0) wherein the performance operation is made, "algorithm selection mode" (i.e., mode 1) wherein the tone-generation algorithm of the sound source 5

is selected, "device selection mode" (i.e., mode 2) wherein the device for carrying out the performance operation is selected and "parameter setting mode" (i.e., mode 3) wherein the sound source parameters are set.

In next step SA3, the processing is delivered to one of steps SA4-SA7 in response to the operation mode corresponding to the setting manner (i.e., modes 0-3) of the above-mentioned mode designation switch. More specifically, the processing proceeds to step SA4 when "mode 1" is designated, while the processing proceeds to step SA5 when "mode 2" is designated. In addition, the processing proceeds to step SA6 when "mode 3" is designated, while the processing proceeds to step SA7 when "mode 0" is designated.

Next, description will be given with respect to the operation of the present embodiment in each mode.

① Algorithm Selection Mode

When the mode designation switch is set at mode 1, the processing proceeds to step SA4 in accordance with the judgement result of step SA3, so that algorithm selection routine is to be activated. When the algorithm selection routine is started, algorithm display program (not shown) is executed, so that the display unit 4 will display an image of the initial menu as shown in Fig. 7.

This initial menu is a graphic image of the foregoing algorithm of the sound source 5. Hereinafter, description will be given with respect to this initial menu. In Fig. 7, 20 designates a sound source algorithm display portion which represents the operation manner of the sound source 5. This portion 20 displays the micro-programs by which the drive

unit 6, tone-generation unit 7 and resonance-radiation unit 8 are respectively operated in form of "icon". This "icon" illustrates the operation manner of the instrument to be simulated by each of the units 6 to 8. In the present example, icon of drive portion i representing the operation of the drive unit 6 illustrates "string-striking 1" wherein the hammer strikes the string; icon of tone-generation portion j representing the operation of the tone-generation unit 7 illustrates "1-hole tube"; and icon of resonance-radiation portion k representing the operation of the resonance-radiation unit 8 illustrates "tapered tube". As each of the above-mentioned drive portion i, tone-generation portion j and resonance-radiation portion k, it is possible to select desirable icon by the process of the algorithm selection routine which will be described later. More specifically, it is possible to select one of icons i-1 to i-5 for the drive portion i, icons j-1 to j-5 for the tone-generation portion j and icons k-1 to k-5 for the resonance-radiation portion k.

Next, description will be given with respect to the algorithm selection routine by which desirable icon is selected so as to set the desirable tone-generation algorithm of the sound source 5 by referring to Fig. 5. First, when the display operation of the foregoing initial menu is completed, the processing proceeds to step SB1. When the mouse-type device is used as the pointing device 11, icon selected by this mouse-type device is registered to the sound source algorithm display portion 20 in step SB1. For example, when icons i-1 (i.e., string-striking), j-1 (single

string) and k-2 (small box) are respectively selected for the drive portion i, tone-generation portion j and resonance-radiation portion k, the sound source algorithm simulating the violin is registered to the display portion 20. In next step SB2, algorithm data (i,j,k) which is registered to the display portion 20 as described above is read by the CPU 1a. In response to the read data (i,j,k), the CPU 1a reads out the corresponding micro-programs from the program ROM 1b. Then, the read micro-programs are respectively loaded to the drive DSP 6a, tone-generation DSP 7a and resonance-radiation DSP 8a in accordance with the algorithm data (i,j,k). Thus, each DSP is controlled to be in the operation manner corresponding to the selected algorithm.

In next step SB3, the contents of the control table CT is renewed on the basis of the algorithm data (i,j,k) and performance input device data CD. As described before, this performance input device data CD indicates the number of the performance input element by which the performance data is supplied to No.s (where s=1-4) register of each DSP. The control table CT memorizes table addresses which are used to carry out the scaling operation on the output data of the performance input element designated by the data CD.

In step SB3, the contents of the control table CT is renewed on the basis of the foregoing algorithm data (i,j,k) and performance input device data CD of each portion. As described before, the performance input device data CD represents the number of the performance input element by which the performance data is supplied to No.s (where s=1-4) register of each DSP. In addition, the control table CT

memorizes the table addresses which are used when carrying out the scaling operation on the output data of the performance input element designated by the data CD.

In last step SB4, in each of DSPs 6a, 7a, 8a, the sound source parameter designated by the control table CT and device data CD is set as its initial value. As a result, each DSP functions to simulate the selected instrument. Thereafter, the processing returns to the foregoing main routine as shown in Fig. 4.

② Device Selection Mode

When the mode designation switch is set at mode 2, the processing proceeds to step SA5 in accordance with the judgement result of step SA3 in Fig. 4, so that the device selection routine is activated. When this device selection routine is activated, device display program (not shown) is executed, so that the display unit 4 displays a screen image of device selection menu as shown in Fig. 8.

This device selection image is a graphic display image in which each DSP of the sound source 5 is controlled on the basis of the information of certain performance input element. Hereinafter, description will be given with respect to this device selection image. In Fig. 8, 30 designates a display portion which displays the performance input element registered as the performance input device. In the present embodiment, keyboard 30a, wheel 30b, joy stick 30c and portamento bar 30d are registered as the performance input elements displayed in the display portion 30, for example. On the other hand, 31 designates another display portion which displays the operation manner of each of the DSPs

contained in the sound source 5, i.e., contents of the instrument to be selected for each portion under operation of the foregoing algorithm selection routine. In an example of Fig. 8, the bow (i.e., string-bowing type) is set in a drive portion 31a, and bowing velocity, bowing pressure and filter are set as the sound source parameters. In addition, the string is set in a tone-generation portion 31b, and delay length, delay ratio, filter and loop gain are set as the sound source parameters. Further, metal board is set in a resonance-radiation portion 31c, and pan, depth and filter are set as the sound source parameters.

As described above, the operation parameters are set in each portion. Then, these portions are connected to respective performance input elements, which are registered on the basis of the foregoing device data, on the screen. Thus, the user can identify the control relationship between the performance input element and DSP with ease.

Next, description will be given with respect to the device selection routine by referring to Fig. 6 wherein the performance input element is determined by use of the displayed connection. When the device selection menu is completed, the processing proceeds to step SC1 in Fig. 6 wherein it is judged whether or not the currently registered performance input element is changed. This step judges that the performance input element is changed when the displayed connection information is changed by the pointing device 11 such as the mouse-type device. When there is a change, the judgement result of step SC1 turns to "YES", so that the processing proceeds to step SC2 wherein the displayed

connection is changed in accordance with the change made by the pointing device 11. For example, when the pointing device 11 is operated to connect "keycode" of the keyboard 30a in Fig. 8 with "control 1" of the drive portion 31a, the previous displayed connection is changed such that "keycode" is connected to "control 1". In next step SC3, the contents of the control table CT is set again in response to the changed performance input element. Then, the processing proceeds to step SC4 wherein new control device data CD is set in response to the above-mentioned change.

Meanwhile, if no change is made in the device selection menu so that the previous displayed connection is remained as it is, the judgement result of step SC1 turns to "NO", so that the processing directly proceeds to step SC4 wherein only the device data CD is renewed. In next step SC5, the table address of the control table CT is renewed in accordance with the contents of the control table CT which is set in the foregoing process of step SC3. Thereafter, the processing returns to the main routine. As a result, each DSP will operate in response to the function of the performance input element of which operation is newly defined. Thus, it is possible to arbitrarily define the function of the performance input element. Therefore, in addition to the normal performance technique, it is possible to carry out another performance technique by use of the same performance input element. For example, performance of the stringed instrument can be made by use of the keyboard.

③ Parameter Setting Mode

When the mode designation switch is set at mode 3, the

processing proceeds to step SA6 in accordance with the judgement result of step SA3, so that the parameter setting routine is activated. In this parameter setting routine, the present system carries out the editing operation on the control parameters to be set to the drive DSP 6a, tone-generation DSP 7a and resonance-radiation DSP 8a, and it also carries out the graphic display of the whole algorithm in the sound source 5.

First, when this routine is activated, the processing of CPU 1a proceeds to step SD1 in Fig. 9, wherein the display unit 4 displays the contents of the control parameter CP of the DSP to be edited as the text display. Herein, the operator input digits in accordance with the prompt text (corresponding to edit parts). Such digit input in the edit part has the following meanings.

i) Edit part "1": control parameter CP in the drive DSP 6a is to be edited.

ii) Edit part "2": control parameter CP in the tone-generation DSP 7a is to be edited.

iii) Edit part "3": control parameter CP in the resonance-radiation DSP 8a is to be edited.

iv) Edit part "0": no editing is made, so that the tone-generation is made on the basis of the control parameters CP which are currently set.

Thereafter, the processing proceeds to step SD2 wherein the input digit is judged, so that the processing branches to the desirable step corresponding to the input digit. For example, when "1" is inputted, the processing proceeds to step SD3 wherein the control parameter CP in the drive DSP 6a

is to be edited. Such editing operation is made by the graphic display of the algorithm of the drive unit 6 as shown in Fig. 13. Fig. 13 illustrates an example of the graphic display which represents the algorithm simulating the operation of the reed such as the clarinet. In this example, the filter and non-linear table which simulates the non-linear operation of the reed are displayed. Herein, it is possible for the operator to change them or add new parameters.

Next, when "2" is inputted, the processing proceeds to step SD4 wherein the control parameter CP of the resonance-radiation DSP 8a is to be edited. This editing operation is made by the graphic display of the algorithm of the tone-generation unit 7 as illustrated in Figs. 11, 12. Fig. 12 illustrates an example which displays the algorithm simulating the tone-generation mechanism of the string such as the guitar. As the control parameters CP, this example uses the filter which simulates the string vibration and the vibration applying point on the string. Herein, it is possible to change them or add new parameters.

Next, when "3" is inputted, the processing proceeds to step SD5 wherein the control parameter CP of the resonance-radiation DSP 8a is to be edited. This editing operation is made by the graphic display of the algorithm of the resonance-radiation unit 8 as shown in Fig. 10. Fig. 10 illustrates an example which displays the algorithm simulating the resonance radiation of the tapered tube. As the control parameters, this example uses the data defining the shape of this tapered tube, i.e., position of the tube,

its radius, number of stages and horn length. Herein, it is possible to change them or add new parameters.

After completing each of the processes of steps SD3 to SD5, the processing proceeds to step SD6 wherein it is judged whether or not the control parameter CP of each DSP is changed. If the control parameter CP is added or corrected, the judgement result of step SD6 turns to "YES", so that the processing proceeds to step SD7 wherein on the basis of the changed control parameter CP, the sound source 5 is driven to make a sounding test. In this sounding test, gain balance of the closed loop of the sound source 5 is adjusted to avoid the anomalous oscillation. In next step SD8, data table is made in order to generate sounds of each musical scale having the fundamental pitch under the operation manner of the instrument to be simulated, i.e., instrument which is defined by the control parameters CP.

Meanwhile, if the judgement result of step SD6 is "NO", or if "0" is inputted in the process of step SD1, the processing proceeds to step SD9 representing the play routine which will be described later. In this routine, the tone-generation is carried out on the basis of the control parameters CP to be set in each DSP. Incidentally, detailed description will be made later with respect to this play routine.

In next step SD10, it is judged whether or not the edited control parameter CP is written into the writable non-volatile memory (not shown). If the operator decides to register the edited control parameter into the memory by referring to the result of the tone-generation process

described before, such decision is inputted by the key-in operation, so that the judgement result of step SD10 turns to "NO". Then, the processing proceeds to step SD11. If not, the judgement result of step SD10 turns to "NO", so that the processing returns to the foregoing main routine. In this case, the control parameters CP are temporarily stored in the register of the CPU 1a. Therefore, they are erased with the power off.

In step SD11, the operator inputs the present number PN which is used when registering the edited control parameter CP into the memory. In next step SD12, all of the sound source parameters are registered in the predetermined memory area designated by the inputted present number PN. Then, the processing proceeds to step SD13. Herein, all of the sound source parameters contains the control parameters CP, control device data CD and control table data CT. In last step SD13, the current operation mode, i.e., parameter setting mode (i.e., mode 3) is reset to the play mode (i.e., mode 0). Thus, processes of this routine is completed.

④ Play Mode

This mode is activated when the edited control parameters CP are registered into the memory as described before, or when the mode designation switch is set at mode 0. Herein, according to the judgement result of step SA3, the processing proceeds to step SA7, so that the play routine as shown in Fig. 14 is to be started. In this play routine, each of the data set in the internal registers 40-42 of the DSPs as shown in Fig. 16 is read out, so that the musical tone of the simulating instrument can be generated in

response to the performing operation.

In first step SE1 of this routine, the drive-portion control routine, as shown in Fig. 15, is started, so that the processing proceeds to step SF1. In step SF1, a variable "s" representing each of the registers is set at "1" in order to read out each of the data to be set to the internal register 40 of the drive DSP 6a. In next step SF1, it is judged whether or not the control parameter CP(11) is not at "0" and the variable s is larger than "4". If some data is set as the control parameter CP(11), the judgement result of step SF2 turns to "NO", so that the processing proceeds to step SF3. In step SF3, the performance information of the performance input element designated by the control device data CD(11) is read, and then the processing proceeds to step SF4 wherein the scaling operation is carried out on the read performance data by use of the data table designated by the control table CT(11). In step SF5, the scaled data is written into the internal register R1 in the drive DSP 6a. Thus, the DSP 6a generates the foregoing excitation signal. In next step SF6, the foregoing variable s is incremented so as to repeat the above-mentioned processes. Thereafter, until the control parameter CP(1s) becomes equal to "0", i.e., until no control parameter is existed, the read-out operation is made repeatedly on each data. As a result, the DSP 6a can sequentially correct the excitation signals in response to the other control parameters CP.

Next, when the processing proceeds to step SE2 in Fig. 14, the tone-generation-portion control routine is to be started. In this tone-generation-portion control routine,

processes as similar to those of the foregoing step SE1 are executed. More specifically, in order to read out each of the data to be set in the internal register 41 of the tone-generation DSP 7a, the CPU 1a sets the variable s representing each of the register at "1". Next, it is judged whether or not the control parameter CP(21) is not at "0" and variable s is larger than "4". If some data is set as the control parameter CP(21), the CPU 1a reads in the performance information of the performance input element designated by the control device data CD(21) so as to carry out the scaling operation on the read performance information by use of the data table designated by the control table CT(21). Then, the scaled data is written into the internal register R1 in the DSP 7a. The above-mentioned processes are repeatedly executed every time the variable s is incremented. Until the control parameter CP(2s) becomes equal to "0", i.e., until no control parameter CP is existed, the read-out operation is made repeatedly on each data. Thus, the DSP 7a can carry out the tone-generation operation of the instrument to be simulated, and it also oscillates the excitation signal supplied from the drive portion 6.

In next step SE3, the resonance-radiation-portion control routine is started. In this resonance-radiation-portion control routine, processes as similar to those of the foregoing steps SE1, SE2 are executed, so that the DSP 8a can reproduce the resonance-radiation characteristic of the instrument to be simulated.

As described above, in the steps SE1 to SE3, each of the DSPs is operated in response to the set tone-generation

algorithm, assigned performance input element and set control parameters CP which are made in the foregoing modes 1-3, thus, it is possible to perform a music by the desirable musical tones.

By the way, when changing the tone color of the musical tone which is generating now by the performing operation, the read-out operation is made on the preset data which is registered in the foregoing parameter setting mode. Herein, the preset data indicate the foregoing all sound source parameters and micro-programs which define the tone-generation algorithms of each DSP. In order to carry out such data read-out operation, the preset switch provided in the control elements 3 is operated. When this preset switch is operated, the CPU 1a detects its switch on-event, so that the preset call routine of step SE4 is started. When this preset call routine is started, the processing of the CPU 1a proceeds to step SG1 shown in Fig. 17. In step SG1, the CPU 1a reads the identification number PN of the preset switch to be operated. In next step SG2, in accordance with the read-out address which is defined by the read identification number PN of the preset switch, the preset data is read from the non-volatile memory. Then, the micro-programs in the read preset data are respectively delivered to the DSPs. In next step SG3, the control device data CD in the read preset data is written into the predetermined work memory. Next, the processing proceeds to step SG4 wherein the control parameter CP set to each DSP is rewritten into the preset value. Thus, each DSP operates to simulate the instrument defined by the preset value, and consequently it is possible

to perform a music with the musical tone having the different tone color.

Lastly, this invention may be practiced or embodied in still other ways.
Therefore, the preferred embodiment described herein is illustrative and not restrictive, the scope of the invention being indicated by the appended claims and all variations which come within the meaning of the claims are intended to be embraced therein.

Claims

1. An electronic musical apparatus comprising:
a tone generation system (5) for generating a musical tone signal based on a tone generation algorithm including at least two operating portions (6, 7, 8) each of which executes an algorithm to model a part of a selected tone-generation mechanism and is functionally different from the other;
a selector (1a, 1) for selecting at least two algorithms to be respectively executed by the at least two operating portions from among a plurality of algorithms.

2. An electronic musical apparatus as in claim 1,
wherein the tone generation system includes an excitation portion (6) which produces an excitation signal and a tone formation portion (7, 8) which receives the excitation signal and produces an oscillation signal, wherein the excitation portion and the tone formation portion correspond to the at least two operating portions,
wherein the apparatus further comprises:
program storage memory (1b) for storing at least one first program (i-1, i-2, i-3, i-4, i-5), corresponding to an algorithm to be executed by the excitation portion, and a set of second programs (j-1, j-2, j-3, j-4, j-5; k-1, k-2, k-3, k-4, k-5), corresponding to algorithms to be executed by said tone formation portion, wherein each of the first and second programs are different from one another,
and wherein the selector selects one of the set of second programs for use by the tone formation portion, wherein the tone generation system produces a musical tone signal based on the exciting signal and oscillation signal.

3. An electronic musical apparatus as in claim 2,
wherein plural first programs are stored and wherein the selector selects one of the first programs and one of the second programs to constitute the tone generation algorithm.

4. An electronic musical apparatus as in claim 3,
wherein the tone formation portion includes a vibration source portion (7) and a resonance radiation portion (8) and the set of second programs includes a first subset of vibration source programs (j-1, j-2, j-3, j-4, j-5) and a second subset of

* C L M S *

resonance radiation programs (k-1, k-2, k-3, k-4, k-5) different from the vibration source programs, and wherein the selector selects one program from each subset to form the second program.

5. An electronic musical apparatus as in claim 1,
wherein the tone generation system includes first operation means (6) for generating an excitation signal by executing a drive algorithm, and second operation means (7) for receiving the excitation signal and for generating an oscillation signal by executing an oscillation algorithm which cause oscillation of the excitation signal, wherein the first operation means and the second operation means correspond to the at least two operating portions,
wherein the tone generation system generates a musical tone signal based on the exciting signal and oscillation signal,
and wherein the selector selects at least one of the drive algorithm and the oscillation algorithm from among plural different drive algorithms (i-1, i-2, i-3, i-4, i-5) or oscillation algorithms (j-1, j-2, j-3, j-4, j-5), respectively.

6. An electronic musical apparatus as in claim 5,
wherein the selector selects a drive algorithm from among plural drive algorithms including at least two of a string striking algorithm, a string bowing algorithm, a string plucking algorithm, a reed algorithm and a non-reed breath algorithm.

7. An electronic musical apparatus as in claim 5,
wherein the oscillating signal is circulated back to the first operation means for operation with the excitation signal,
wherein the apparatus further comprises mixing means (13) for mixing signals generated by the first and second operation means and outputting the mixed signal as a musical tone signal.

8. An electronic musical apparatus as in claim 5,
including parameter variation accommodation means (1a, 1), responsive to the change of a parameter value of either the first or second operation means, for adjusting the value of at least an additional parameter which controls at least one of gain balance between the first and second operation means and a fundamental pitch of a tone to be generated, thereby to stabilize operation of the electronic musical apparatus in response to parameter changes.

9. An electronic musical apparatus as in claim 5,
further comprising filter means (6b) between the first operation means and the second operation means for filtering the excitation signal to avoid anomalous oscillation.

10. An electronic musical apparatus as in claim 1,
wherein the tone generation system includes first operation means (7) for generating an oscillation signal by executing an oscillation algorithm, and second operation means (8) for receiving the oscillation signal and for generating an output signal by executing a resonance radiation algorithm, wherein the first operation means and the second operation means correspond to the at least two operating portions,
wherein the tone generation system generates a musical tone signal in accordance with a tone generation algorithm including the oscillation algorithm and the resonance radiation algorithm,
and wherein the selector selects at least one of the oscillation algorithm and the resonance radiation algorithm from among plural different oscillation algorithms (j-1, j-2, j-3, j-4, j-5) or resonance radiation algorithms (k-1, k-2, k-3, k-4, k-5), respectively.

11. An electronic musical apparatus as in claim 10,
wherein the selector selects an oscillation algorithm from among at least two of an algorithm corresponding to a string, at least one algorithm corresponding to a tube having at least one tone hole, an algorithm corresponding to a branched tube and an algorithm corresponding to a tube having no tone holes.

12. An electronic musical apparatus as in claim 10,
wherein the selector selects a resonance radiation algorithm from among at least two of an algorithm corresponding to a piano body, an algorithm corresponding to a resonance box, an algorithm corresponding to a tapered tube, at least one algorithm corresponding to an exponential curve tube and an algorithm corresponding to a metal board.

13. An electronic musical apparatus as in claim 10,
including parameter variation accommodation means (1a, 1), responsive to the change of a parameter value of either the first or second operation means, for adjusting the

value of at least an additional parameter which controls at least one of gain balance between the first and second operation means and a fundamental pitch of a tone to be generated, thereby to stabilize operation of the electronic musical apparatus in response to parameter changes.

14. An electronic musical apparatus as in claim 1,
wherein the tone generation system includes a first digital signal processor (6) for executing a first algorithm, and a second digital signal processor (7, 8) for executing a second algorithm, wherein the first and second digital signal processors correspond to the at least two operating portions,
wherein the tone generation system generates a musical tone signal in accordance with a tone generation algorithm based on cooperative execution of the respective first and second algorithms by the first and second digital signal processors,
wherein the apparatus further comprises:
a memory for storing a plurality of different first algorithms (i-1, i-2, i-3, i-4, i-5) and a plurality of different second algorithms (j-1, j-2, j-3, j-4, j-5; k-1, k-2, k-3, k-4, k-5), wherein the selector selects one of the first algorithms and one of the second algorithms;
control means (1a) for setting the selected first algorithm for use by the first digital signal processor and the selected second algorithm for use by the second digital signal processor, whereby a musical tone signal is generated in accordance with the selected first and second algorithms.

15. In an electronic musical apparatus providing a drive means for generating an excitation signal corresponding to tone-generation energy and a tone-generation means for resonating said excitation signal to thereby output a resonated signal, said electronic musical apparatus comprising:
display means for displaying tone-generation algorithms defined by operation manners of said drive means and said tone-generation means respectively in form of the graphics or graphic patterns; and
algorithm control means for varying the operation manners of said drive means and said tone-generation means displayed by said display means and/or combining them so as to control said tone-generation algorithms.

16. An electronic musical apparatus comprising:
sound source means for outputting a musical tone signal in accordance with a tone-

generation algorithm which is predefined for each of instruments to be simulated;
display means for displaying said tone-generation algorithm in form of a predetermined graphic pattern; and
algorithm control means for controlling said display means to thereby vary the contents of said tone-generation algorithm in accordance with an operation made by a performer.

17. An electronic musical apparatus as defined in claim 16,
wherein said sound source means contains a drive portion, a tone-generation portion and a resonance-radiation portion all of which function to create said musical tone signal corresponding to an instrument to be simulated.

18. An electronic musical apparatus as defined in claim 17,
wherein each portion of said sound source means contains a digital signal processor (DSP) which outputs operation data corresponding to sampling data of sounds of an instrument to be simulated.

ELECTRONIC MUSICAL INSTRUMENT

ABSTRACT OF THE DISCLOSURE

An electronic musical instrument, which is configured to simulate one or more instruments, provides a sound source, a display unit and a control portion. Herein, under control of the control portion, the display unit displays the predetermined graphic pattern corresponding to the tone-generation mechanism, i.e., tone-generation algorithm of an instrument to be simulated. The sound source contains a drive portion, a tone-generation portion and a resonance-radiation portion, each of which further contains a digital signal processor (DSP). All of these portions function to create a digitized musical tone signal corresponding to a simulated sound of the instrument by combining operation data outputted from the DSPs. By controlling the display unit, it is possible to arbitrarily vary the contents of the displayed tone-generation algorithm, so that the performer can easily and freely perform a music on this electronic musical instrument.

FIGURE 1

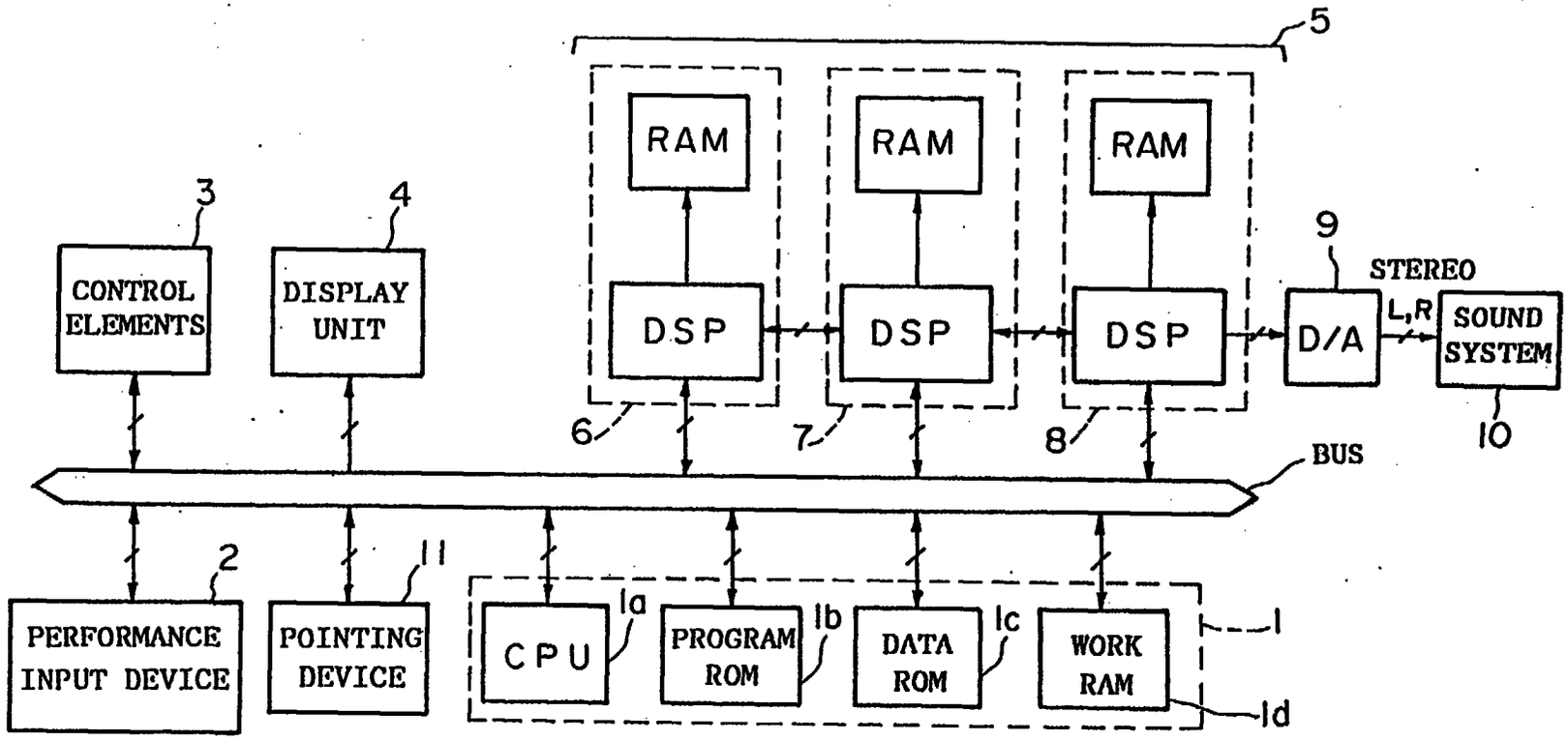
5
RAM
RAM
RAM
3
4
9
STEREO
CONTROL ELEMENTS
DISPLAY UNIT
DSP
DSP
DSP
D/A
L,R
SOUND SYSTEM
6
7
8
10
BUS
2
11
PERFORMANCE INPUT DEVICE
POINTING DEVICE
CPU
1a
PROGRAM ROM
1b
DATA ROM
1c
WORK RAM
1
1d

FIG.1

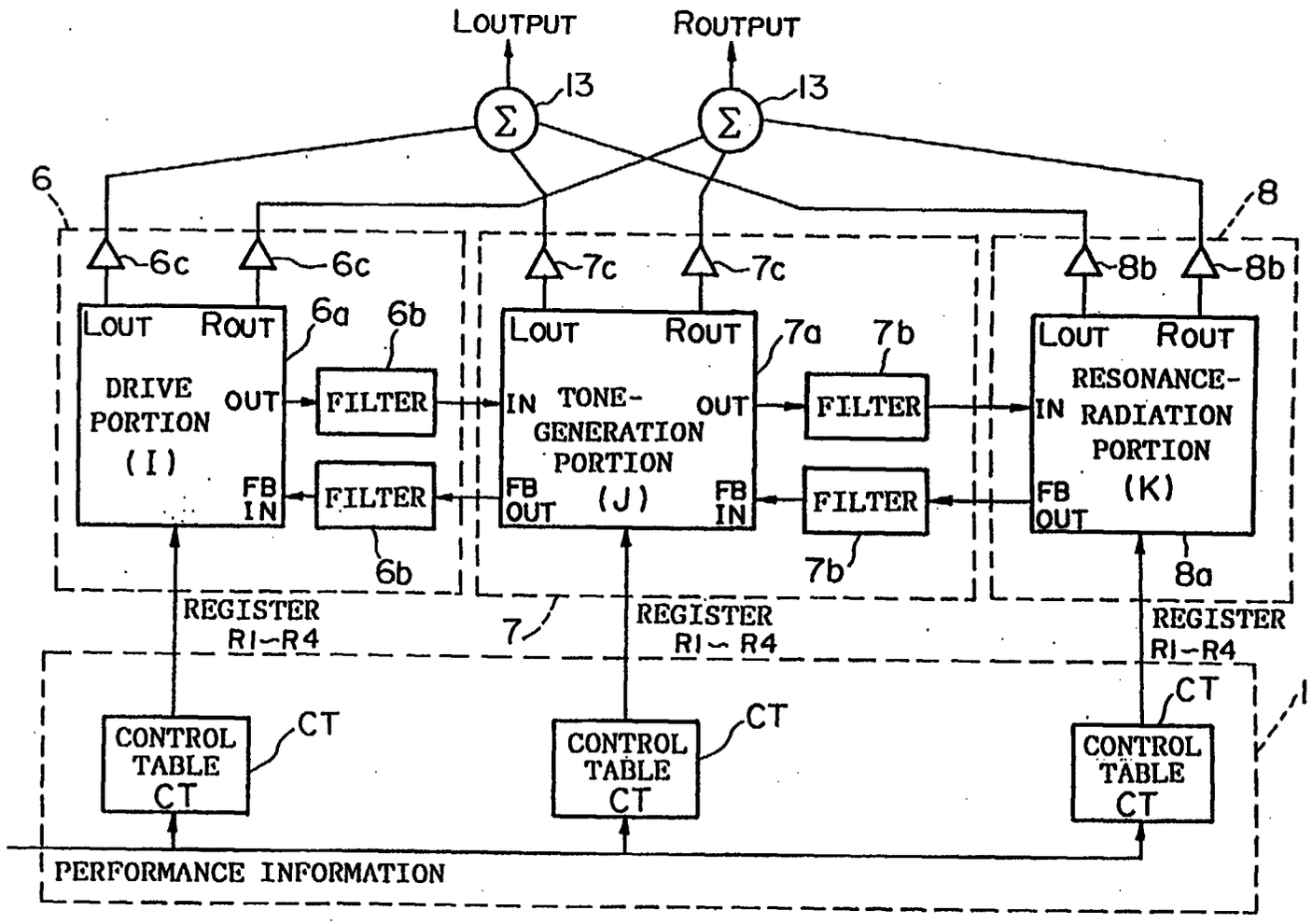
LOUTPUT
ROUTPUT
13
13
6
8
6c
6c
7c
7c
8b
8b
LOUT
ROUT
DRIVE PORTION (I)
OUT
FB IN
6a
6b
FILTER
FILTER
6b
LOUT
ROUT
IN
TONE-GENERATION PORTION (J)
OUT
FB OUT
FB IN
7a
7b
FILTER
FILTER
7b
LOUT
ROUT
IN
RESONANCE-RADIATION PORTION (K)
FB OUT
8a
7
REGISTER R1-R4
REGISTER R1-R4
REGISTER R1-R4
CONTROL TABLE CT
CT
CONTROL TABLE CT
CT
CONTROL TABLE CT
CT
1
PERFORMANCE INFORMATION

FIG.2

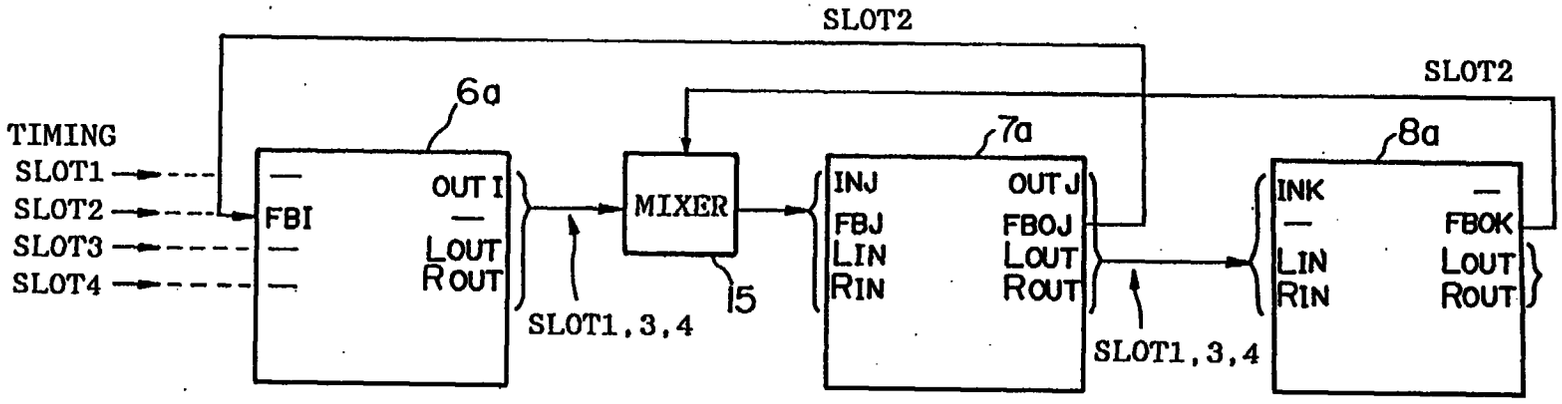
SLOT2
SLOT2
TIMING
SLOT1
SLOT2
SLOT3
SLOT4
6a
FBI
OUT I
LOUT
ROUT
SLOT1,3,4
MIXER
15
7a
INJ
FBJ
LIN
RIN
OUT J
FBOJ
LOUT
ROUT
SLOT1,3,4
8a
INK
LIN
RIN
FBOK
LOUT
ROUT

FIG.3

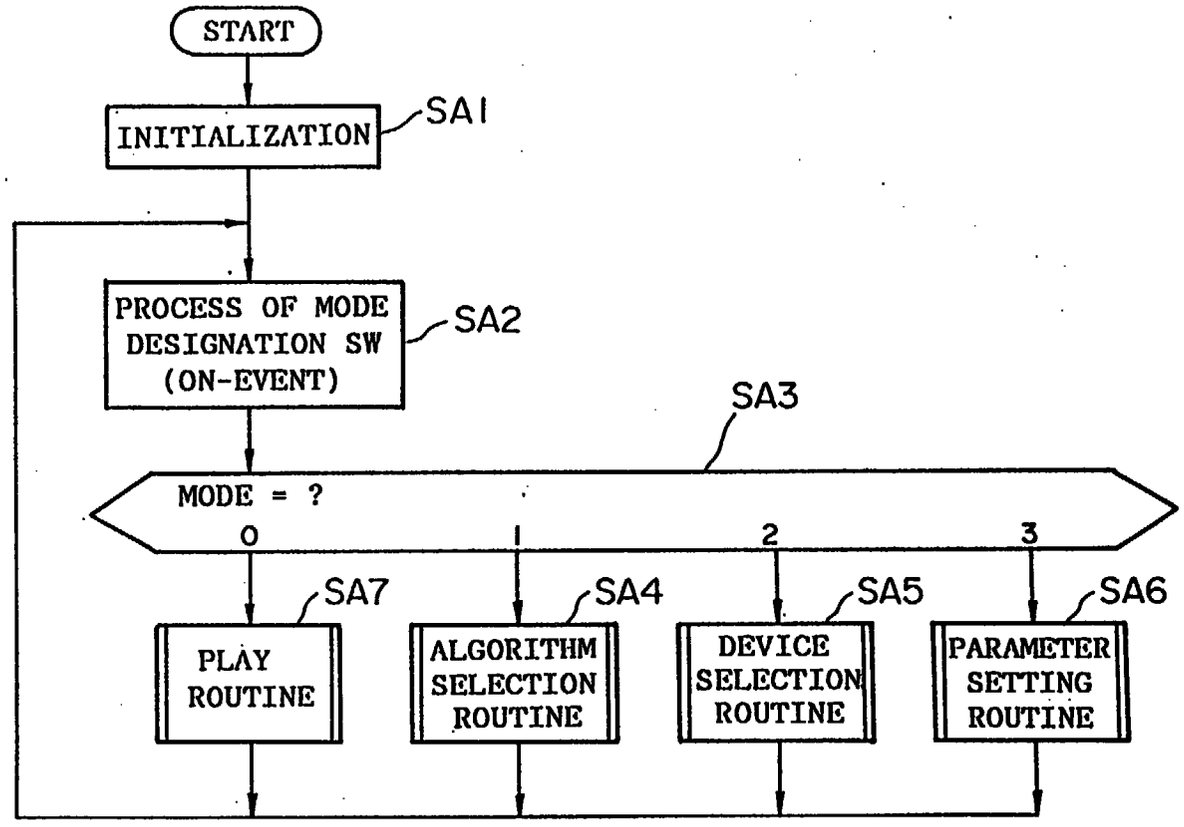

FIG.4 (MAIN ROUTINE)

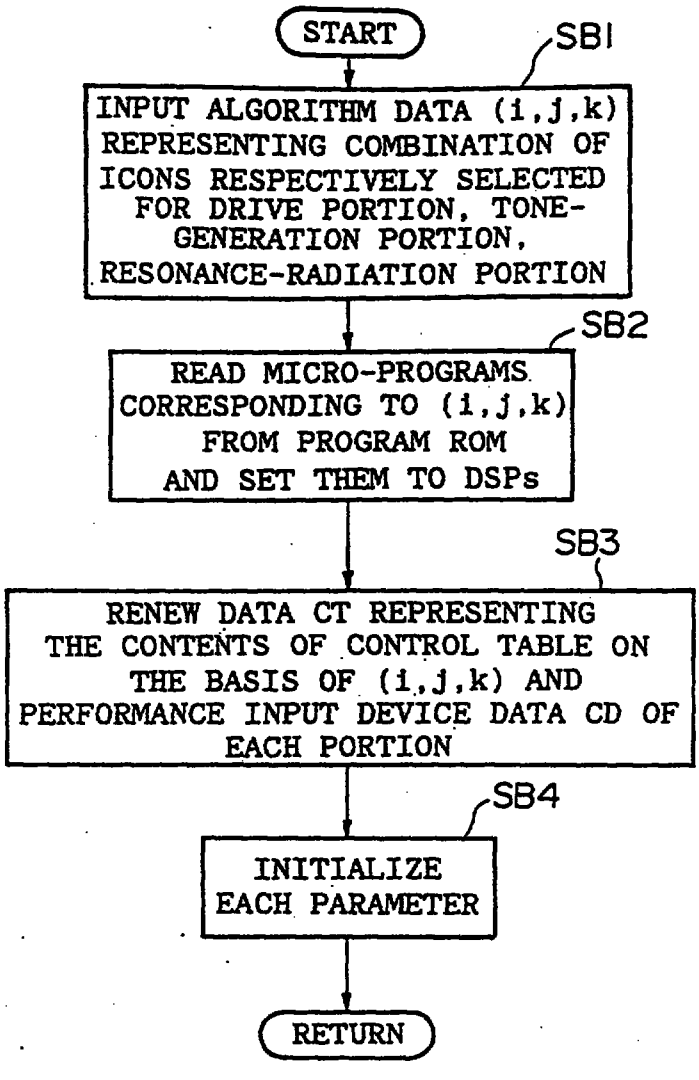

FIG.5

(ALGORITHM SELECTION ROUTINE)

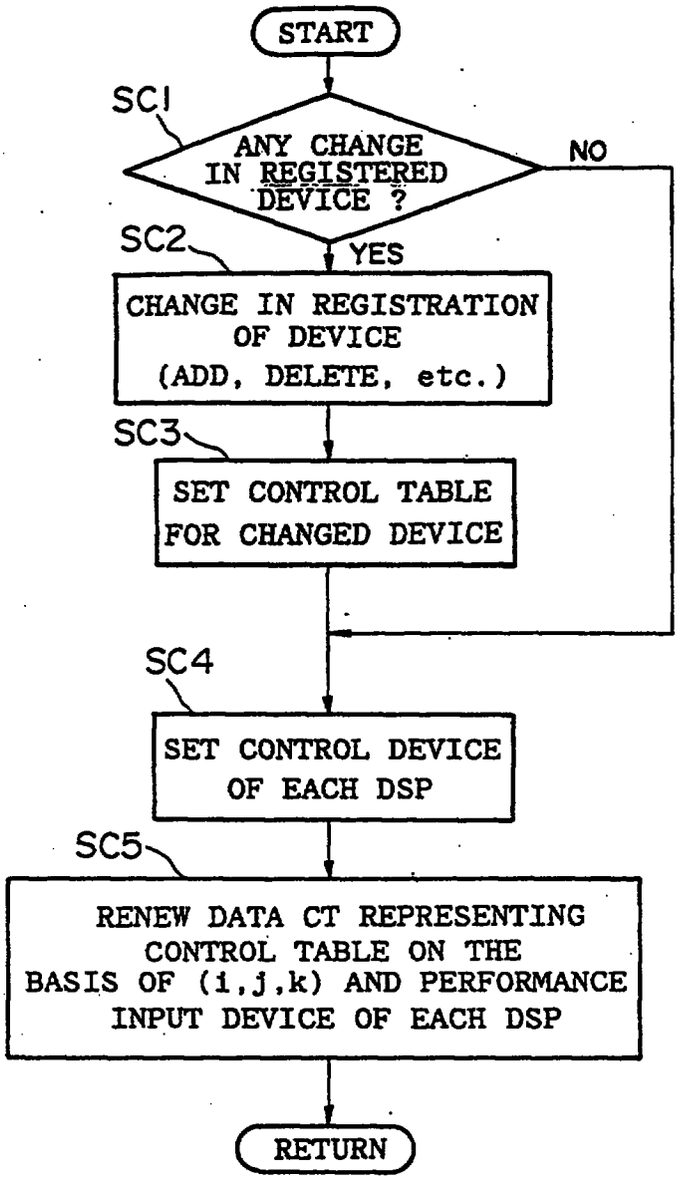

FIG.6

(DEVICE SELECTION ROUTINE)

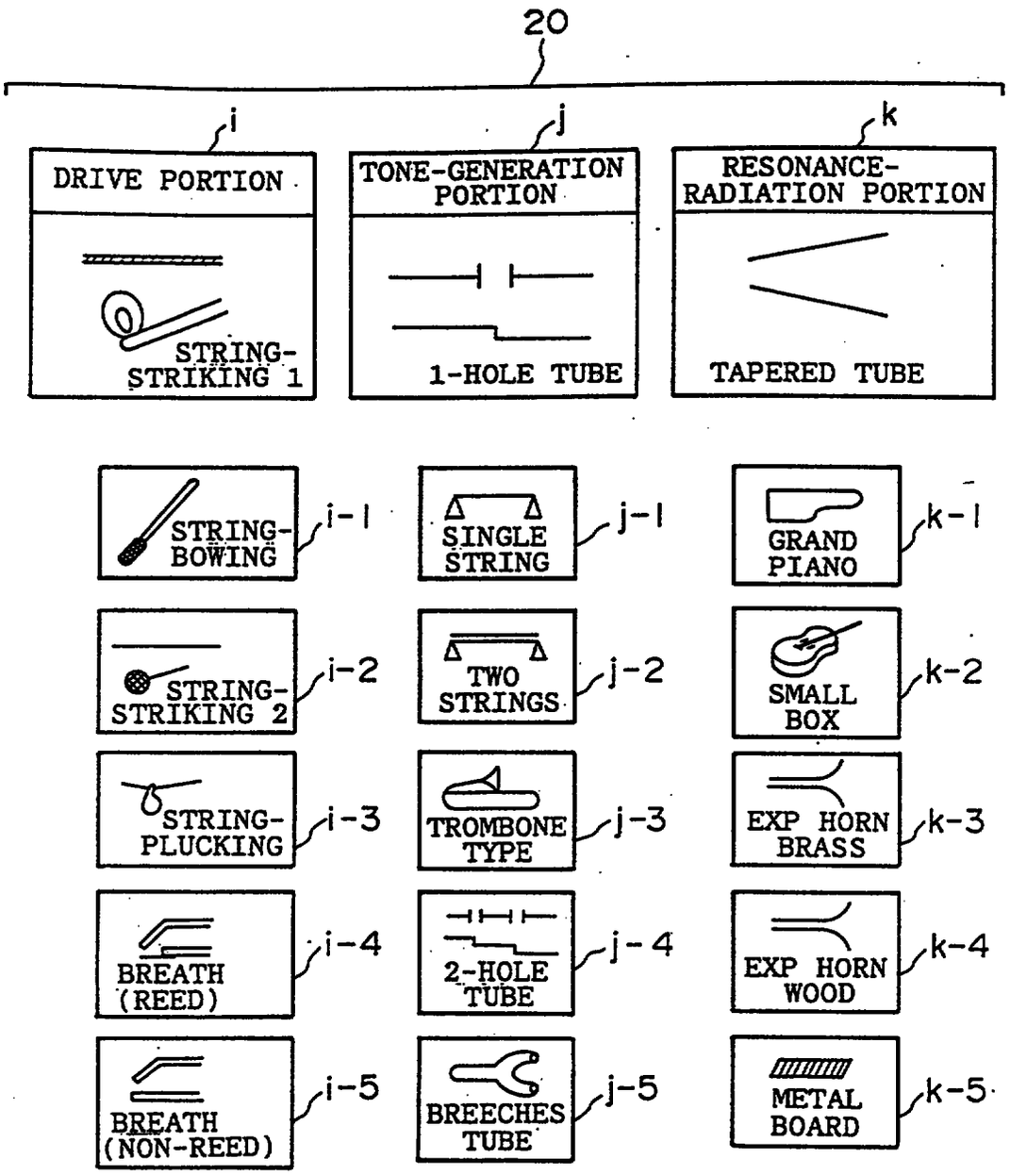
20
i
j
k
DRIVE PORTION
TONE-GENERATION PORTION
RESONANCE-RADIATION PORTION
STRING-STRIKING 1
1-HOLE TUBE
TAPERED TUBE
STRING-BOWING
i-1
SINGLE STRING
j-1
GRAND PIANO
k-1
STRING-STRIKING 2
i-2
TWO STRINGS
j-2
SMALL BOX
k-2
STRING-PLUCKING
i-3
TROMBONE TYPE
j-3
EXP HORN BRASS
k-3
BREATH (REED)
i-4
2-HOLE TUBE
j-4
EXP HORN WOOD
k-4
BREATH (NON-REED)
i-5
BREECHES TUBE
j-5
METAL BOARD
k-5

FIG.7

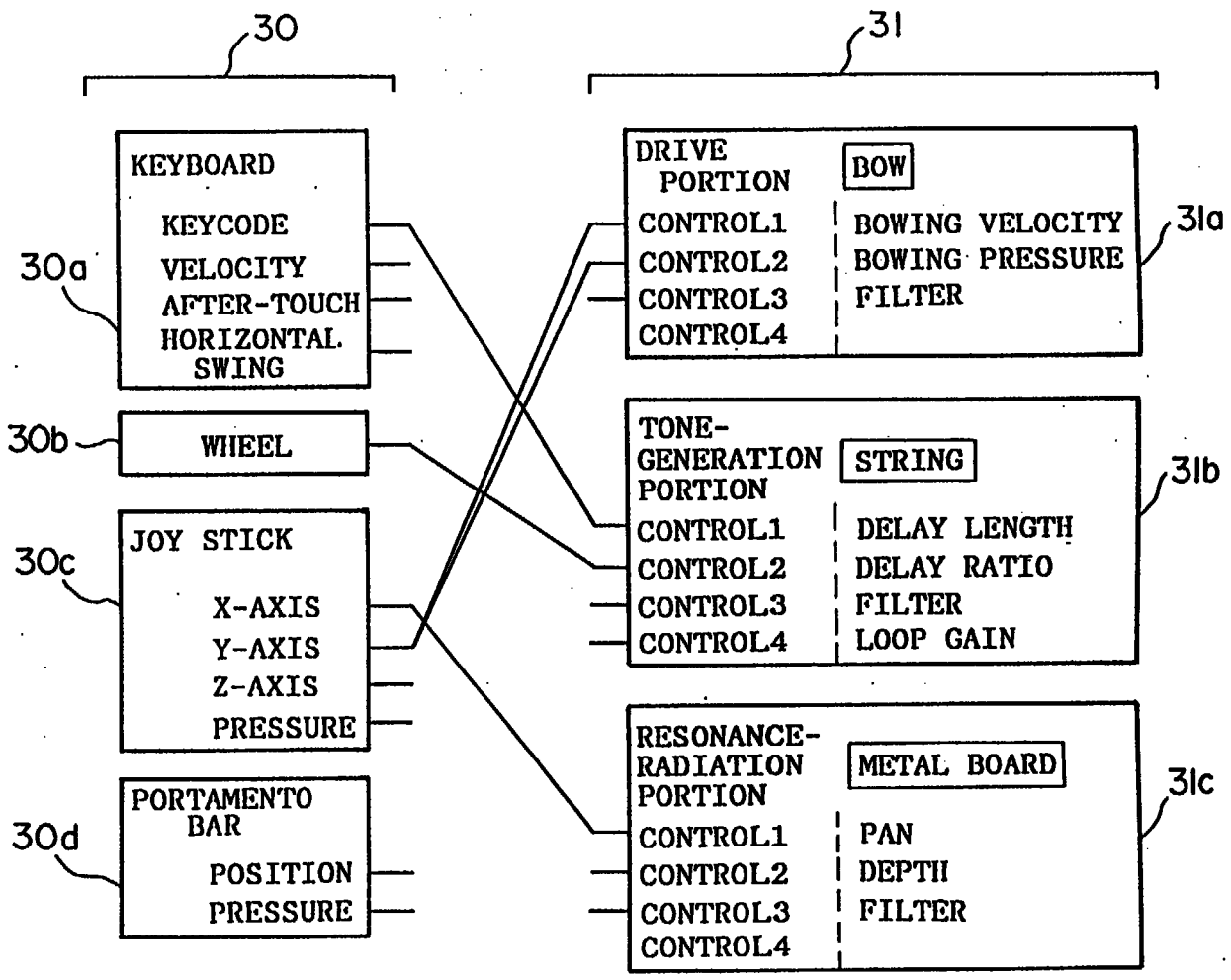
30
31
KEYBOARD
KEYCODE
VELOCITY
AFTER-TOUCH
HORIZONTAL SWING
30a
WHEEL
30b
JOY STICK
X-AXIS
Y-AXIS
Z-AXIS
PRESSURE
30c
PORTAMENTO BAR
POSITION
PRESSURE
30d
DRIVE PORTION
BOW
CONTROL1
CONTROL2
CONTROL3
CONTROL4
BOWING VELOCITY
BOWING PRESSURE
FILTER
31a
TONE-GENERATION PORTION
STRING
CONTROL1
CONTROL2
CONTROL3
CONTROL4
DELAY LENGTH
DELAY RATIO
FILTER
LOOP GAIN
31b
RESONANCE-RADIATION PORTION
METAL BOARD
CONTROL1
CONTROL2
CONTROL3
CONTROL4
PAN
DEPTH
FILTER
31c

FIG.8

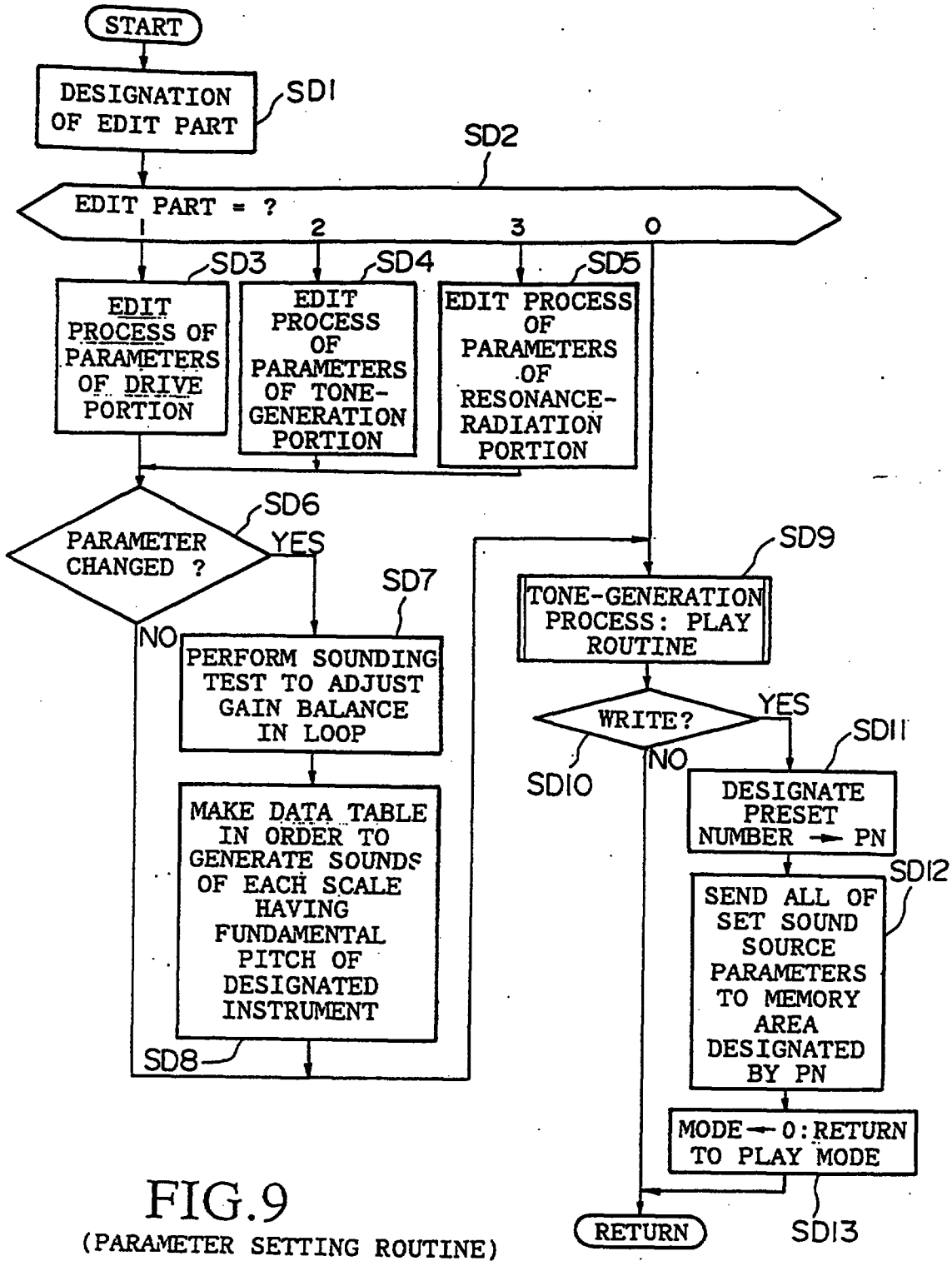

FIG.9
(PARAMETER SETTING ROUTINE)

RESONANCE-RADIATION PORTION TAPERED TUBE

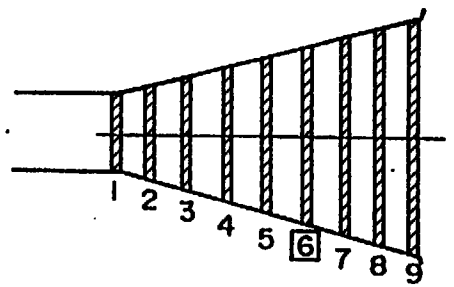

POSITION = 6

RADIUS = 2.5

NUMBER OF STAGES = 9

HORN LENGTH = 8

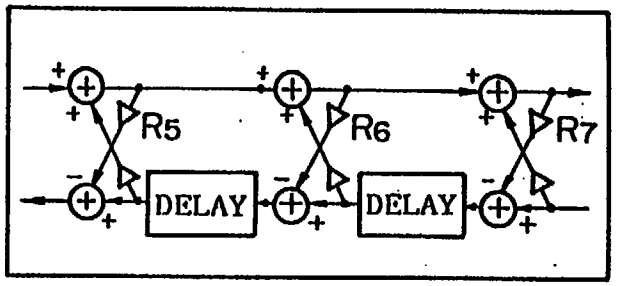

$$A_6 = \pi \times (2.5)^2$$

$$R_6 = \frac{A_7 - A_6}{A_7 + A_6}$$

$$= 0.04$$

FIG.10

TONE-GENERATION PORTION 1-HOLE TUBE

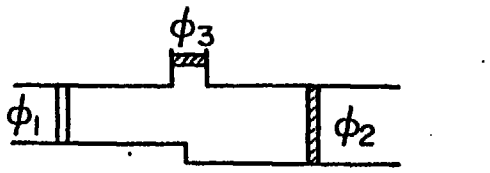

FILTER 1 = 3

FILTER 2 = 1

DIAMETER $\phi 1$ = 1.5

DIAMETER $\phi 2$ = 2

DIAMETER $\phi 3$ = 1

FUNDAMENTAL PITCH = 400 Hz

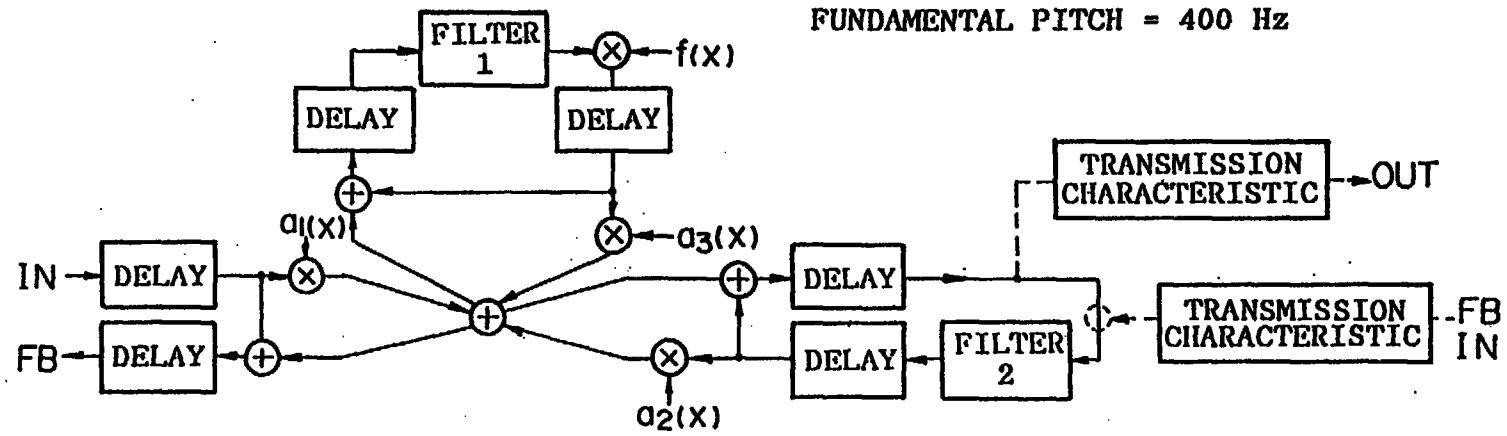

FIG.11

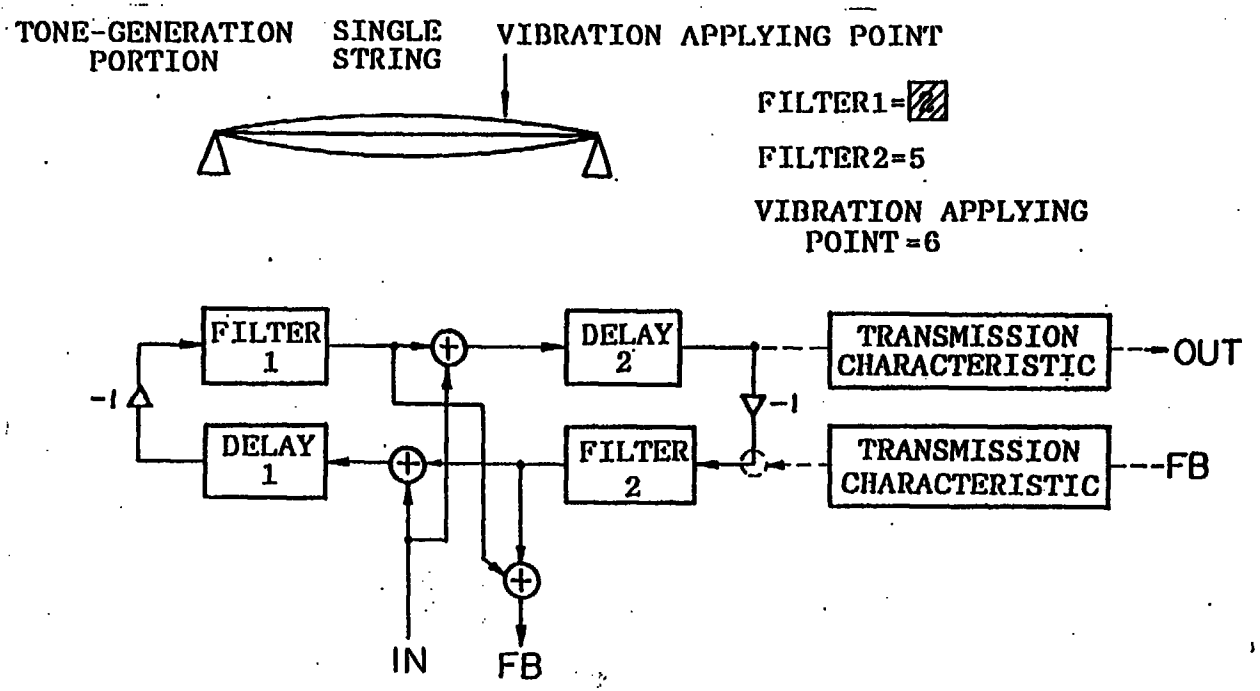
TONE-GENERATION PORTION
SINGLE STRING
VIBRATION APPLYING POINT
FILTER1=
FILTER2=5
VIBRATION APPLYING POINT=6
FILTER 1
DELAY 1
DELAY 2
FILTER 2
-1
-1
TRANSMISSION CHARACTERISTIC
TRANSMISSION CHARACTERISTIC
OUT
FB
IN
FB

FIG.12

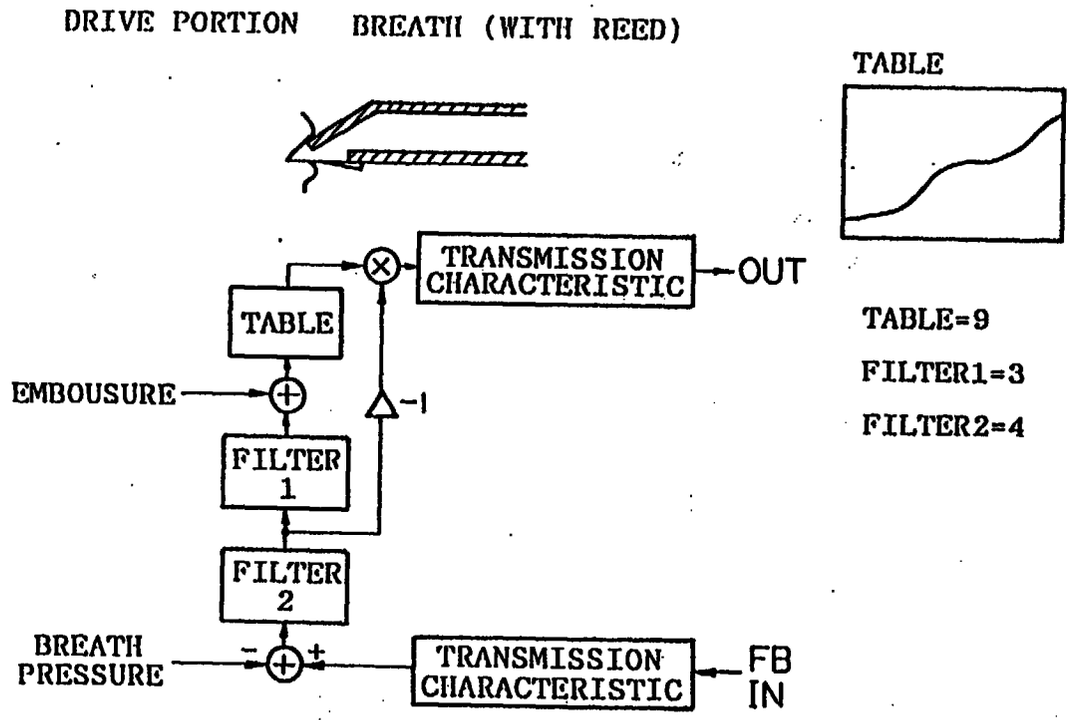
DRIVE PORTION
BREATH (WITH REED)
TABLE
TRANSMISSION CHARACTERISTIC
OUT
TABLE
EMBOUSURE
-1
FILTER 1
FILTER 2
BREATH PRESSURE
TRANSMISSION CHARACTERISTIC
FB IN
TABLE=9
FILTER1=3
FILTER2=4

FIG.13

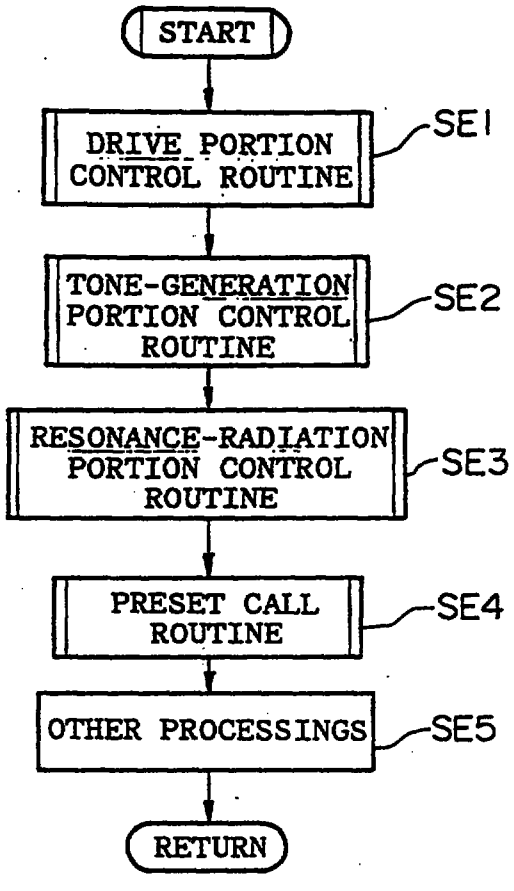

FIG.14 (PLAY ROUTINE)

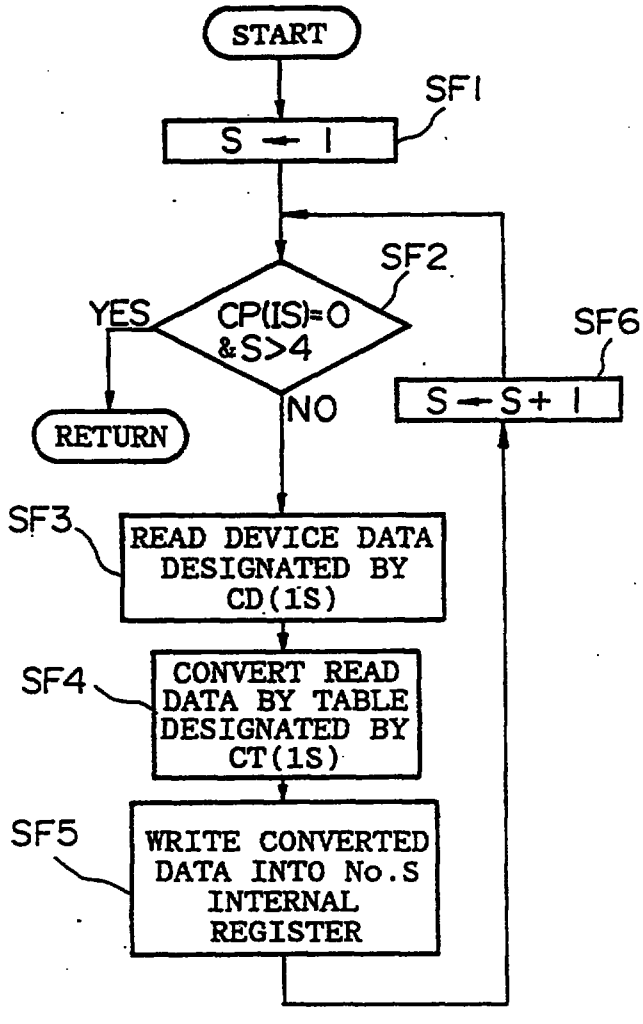

FIG.15 (CONTROL ROUTINE)

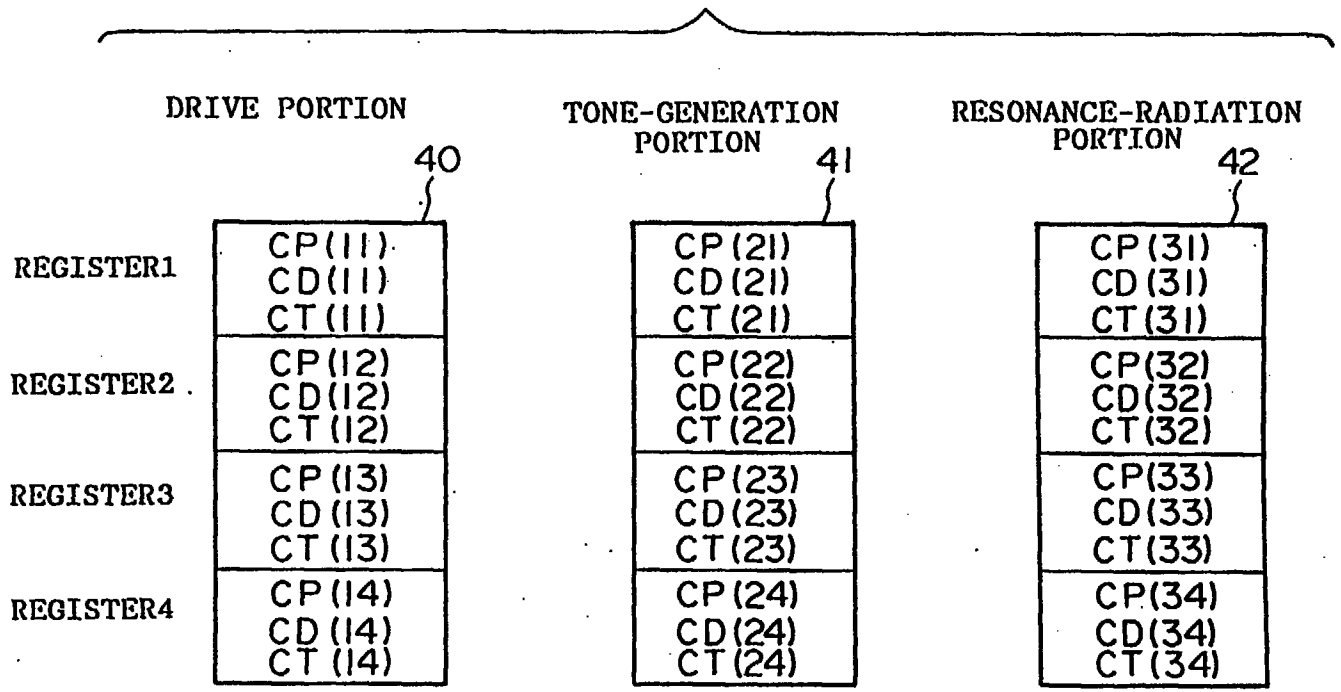
DRIVE PORTION
40
TONE-GENERATION PORTION
41
RESONANCE-RADIATION PORTION
42
REGISTER1
REGISTER2
REGISTER3
REGISTER4
CP(11) CD(11) CT(11)
CP(12) CD(12) CT(12)
CP(13) CD(13) CT(13)
CP(14) CD(14) CT(14)
CP(21) CD(21) CT(21)
CP(22) CD(22) CT(22)
CP(23) CD(23) CT(23)
CP(24) CD(24) CT(24)
CP(31) CD(31) CT(31)
CP(32) CD(32) CT(32)
CP(33) CD(33) CT(33)
CP(34) CD(34) CT(34)

FIG.16

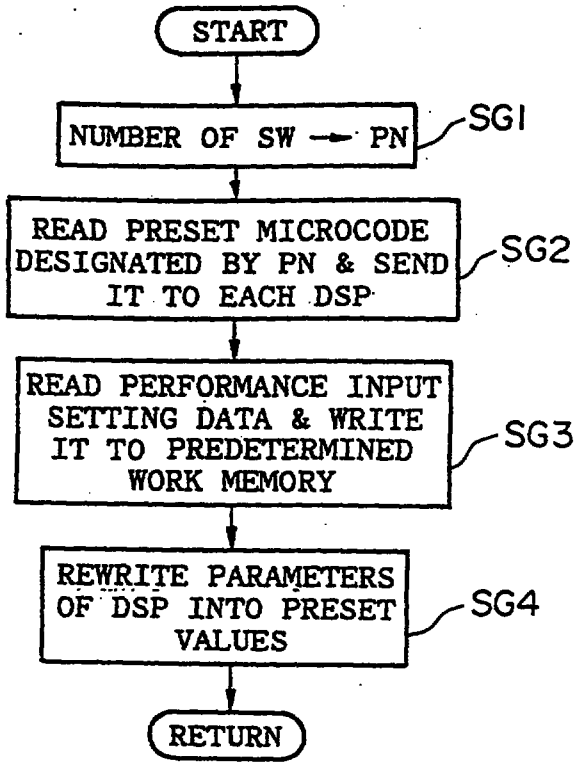

FIG.17 (PRESET CALL ROUTINE)

9702888-0 IPO S

REPLACEMENT SHEET

REPLACEMENT SHEETS SG
☑ Description : paged 1 to paged 4
☑ Claim(s) : paged 19 to paged 27
☐ Drawing(s) : paged ..... to paged .....
☐ Abstract : paged ..... to paged .....

DATE OF RECEIPT 13/10/99

REPLACEMENT SHEET
13 OCT 1999

ELECTRONIC MUSICAL INSTRUMENT

BACKGROUND OF THE INVENTION

The present invention relates to an electronic musical instrument which is suitable for synthesizing a desirable musical tone by combining plural sounds.

Recently, there are developed several kinds of electronic musical instruments each of which activates a simulation model of a tone-generation mechanism of a non-electronic musical instrument so as to synthesize its musical tone. Such music synthesis technique is disclosed in the papers such as U.S. Patent Nos. 4,984,276 and 4,130,043. Herein, there is disclosed an electronic musical instrument which simulates a tone-generation mechanism of the wind instrument such as the clarinet. In addition, the above mentioned papers also disclose about the electronic musical instruments which simulate tone-generation mechanisms of the string-plucking-type instrument such as the guitar and string-striking-type instrument such as the piano.

In EP 0 393 701 a musical tone synthesizing apparatus is disclosed which synthesizes a musical tone signal in response to a wind instrument, brass instrument or the like. Therein an excitation circuit simulates operations of a reed or mouth piece, while a resonance circuit simulates the resonance tube. An excitation signal is circulated in the loop consisting of the excitation and the resonance circuit. The apparatus picks up a signal from this loop and generates a musical tone signal to simulate the wind instrument tone or the like.

EP 0 397 149 discloses a music tone waveform signal generating apparatus to simulate the sound waveform of a wind instrument. A waveform signal is circulated in a loop consisting of two signal lines. A conversion portion receives the waveform signal to generate a musical tone control signal. In response to this a converted

REPLACEMENT SHEET
13 OCT 1999

waveform signal is obtained to be outputted to the first signal line. A transmission portion delays the waveform signal while transmitting it from the first to the second signal line. The delayed signal is fed back to the second signal line. A signal loop portion mixes the waveform signals on first and second signal lines.

Meanwhile, currently produced electronic musical instrument may provide plural FM sound sources called "operators". By arbitrarily combining some of these operators, a desirable musical tone is to be synthesized. In addition, the above-mentioned electronic musical instrument provides a liquid crystal display (i.e., "LCD") which displays the combining state or connecting manner of these operators. This combining state of the operators is called "algorithm" which is an important element for determining the tone color of the musical tone to be generated. By use of this algorithm, the user of this electronic musical instrument can acknowledge the physical combination of the sound sources. Therefore, by changing the contents of this algorithm, it is possible to carry out the sound synthesis or sound composition with ease.

When applying the above-mentioned function to the conventional electronic musical instrument which simulates the tone-generation mechanism of the non-electronic musical instrument, it is possible to carry out the varied sound synthesis by arbitrarily combining some of the tone- generation mechanisms of the non-electronic musical instruments. However, when using the different musical instrument to be simulated, such electronic musical instrument must require completely different tone-generation algorithm or its operation parameters. For this reason, when carrying out the sound synthesis by freely using several kinds of the tone-generation mechanisms, it is required for the user to have the expert knowledge concerning the tone- generation mechanism of the instrument itself to be simulated. This is difficult for the non-professional user who does not have the expert knowledge about the musical instrument, because such user cannot figure out the setting manner of the algorithm or operation parameters. Thus, there is a problem in that the sound synthesis is very difficult for the users.

REPLACEMENT SHEET
13 OCT 1999

It is accordingly a primary object of the present invention to provide an electronic musical instrument which can carry out the sound synthesis by freely using several kinds of the tone-generation mechanisms of the non-electronic musical instruments with ease.

In a first aspect of the present invention, there is provided an electronic musical instrument comprising:

drive means for generating an excitation signal corresponding to tone-generation energy;

tone-generation means for resonating the excitation signal so as to output a resonated signal;

display means for displaying tone-generation algorithms defined by operation manners of the drive means and tone-generation means respectively in form of the graphics or graphic patters; and

algorithm control means for varying the operation manners of the drive means and tone-generation means displayed by the display means and/or combining them so as to control the tone-generation algorithms.

In a second aspect of the present invention, there is provided an electronic musical instrument comprising:

sound source means for outputting a musical tone signal in accordance with a tone-generation algorithm which is pre-defined for each of instruments to be simulated;

display means for displaying the tone-generation algorithm in form of a predetermined graphic pattern; and

algorithm control means for controlling the display means to thereby vary the contents of the tone-generation algorithm in accordance with an operation made by a

REPLACEMENT SHEET
13 OCT 1999

performer.

BRIEF DESCRIPTION OF THE DRAWINGS

Further objects and advantages of the present invention will be apparent from the following description, reference being had to the accompanying drawings wherein the preferred embodiment of the present invention is clearly shown.

In the drawings:

Fig. 1 is a block diagram showing the whole configuration of an electronic musical instrument according to an embodiment of the present invention;

Fig. 2 is a block diagram showing a detailed configuration of a sound source shown in Fig. 1;

Fig. 3 is a system diagram showing a connection manner of DSPs used in the sound source shown in Fig. 2;

Fig. 4 is a flowchart showing a main routine of an operation of the present embodiment to be executed;

Fig. 5 is a flowchart showing an algorithm selection routine;

Fig. 6 is a flowchart showing a device selection routine;

Fig. 7 illustrates an example of a screen image of an initial menu which is displayed by the present embodiment when the algorithm selection routine is started;

Fig. 8 illustrates an example of a screen image for the device selection to be displayed when the device selection routine is started;

Fig. 9 is a flowchart showing a parameter setting routine;

value of at least an additional parameter which controls at least one of gain balance between the first and second operation means and a fundamental pitch of a tone to be generated, thereby to stabilize operation of the electronic musical apparatus in response to parameter changes.

14. An electronic musical apparatus as in claim 1,
wherein the tone generation system includes a first digital signal processor (6) for executing a first algorithm, and a second digital signal processor (7, 8) for executing a second algorithm, wherein the first and second digital signal processors correspond to the at least two operating portions,
wherein the tone generation system generates a musical tone signal in accordance with a tone generation algorithm based on cooperative execution of the respective first and second algorithms by the first and second digital signal processors,
wherein the apparatus further comprises:
a memory for storing a plurality of different first algorithms (i-1, i-2, i-3, i-4, i-5) and a plurality of different second algorithms (j-1, j-2, j-3, j-4, j-5; k-1, k-2, k-3, k-4, k-5), wherein the selector selects one of the first algorithms and one of the second algorithms;
control means (1a) for setting the selected first algorithm for use by the first digital signal processor and the selected second algorithm for use by the second digital signal processor, whereby a musical tone signal is generated in accordance with the selected first and second algorithms.

15. An electronic musical apparatus providing a drive means for generating an excitation signal corresponding to tone-generation energy and a tone-generation means for resonating said excitation signal to thereby output a resonated signal, said electronic musical apparatus comprising:
display means for displaying tone-generation algorithms defined by operation manners of said drive means and said tone-generation means respectively in form of the graphics or graphic patterns; and
algorithm control means for varying the operation manners of said drive means and said tone-generation means displayed by said display means and/or combining them so as to control said tone-generation algorithms.

16. An electronic musical apparatus comprising:
sound source means for outputting a musical tone signal in accordance with a tone-