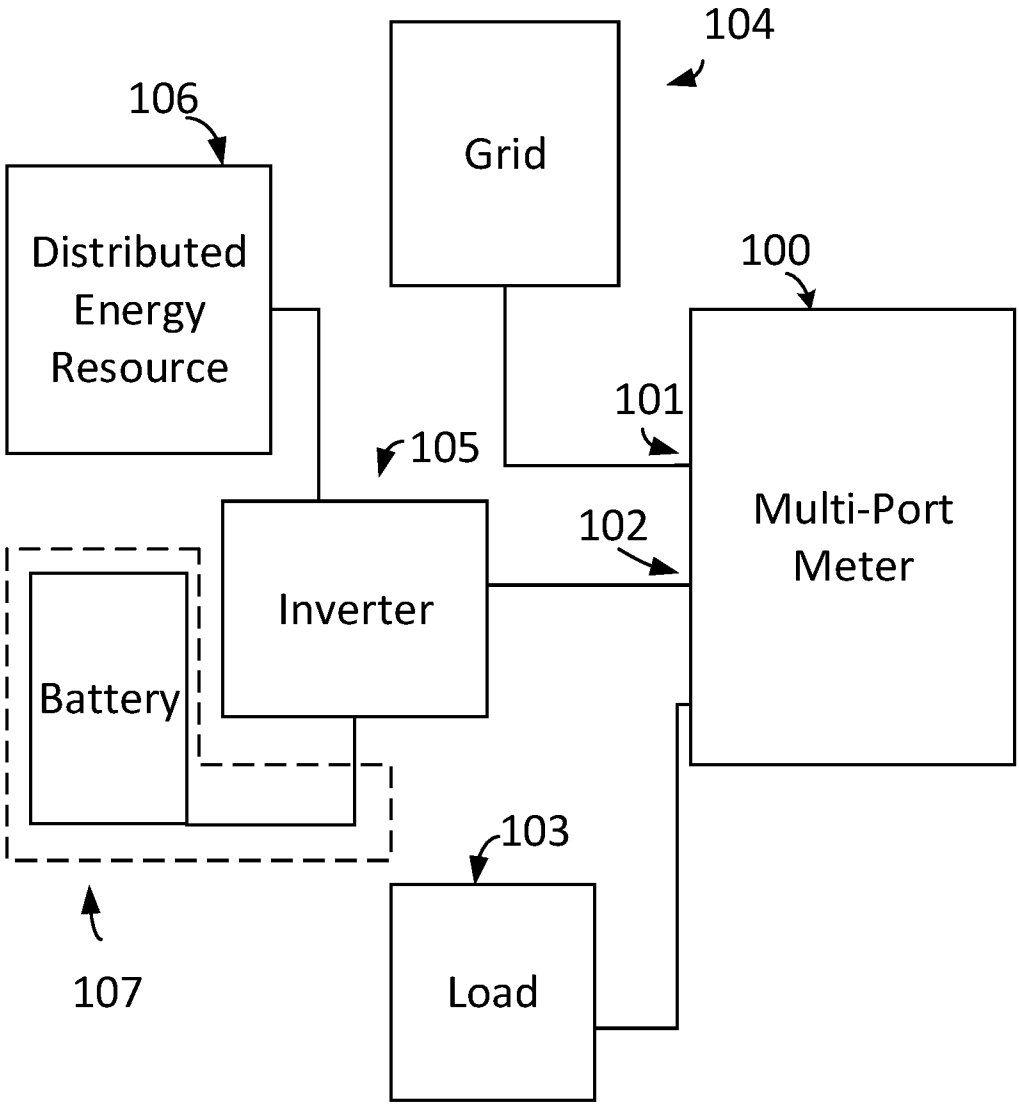
104
Grid
106
Distributed Energy Resource
100
101
105
Multi-Port Meter
102
Inverter
Battery
103
Load
107

Fig. 1

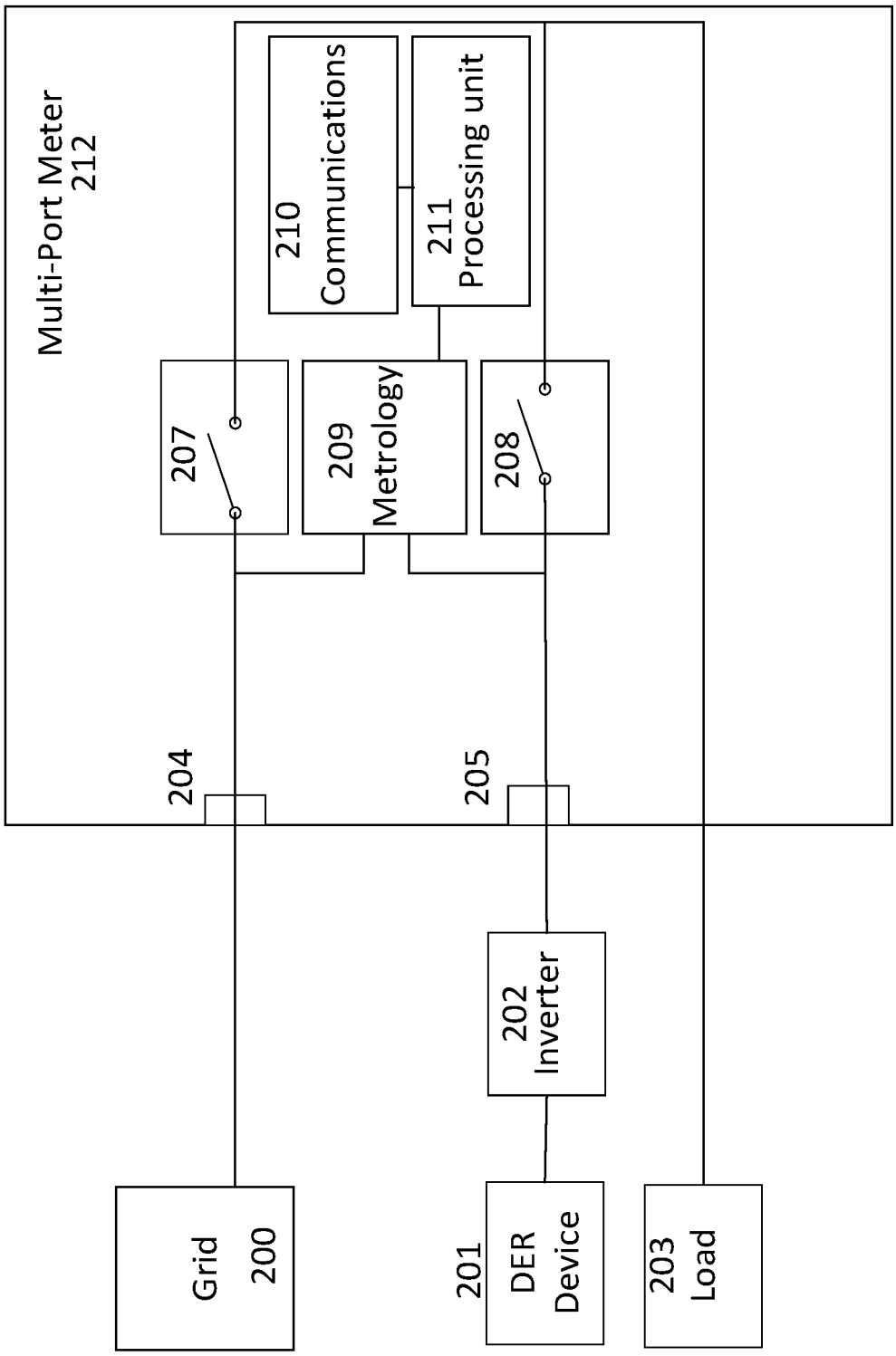
Multi-Port Meter
212
210
Communications
211
Processing unit
207
209
Metrology
208
204
205
Grid
200
202
Inverter
201
DER
Device
203
Load

Fig. 2

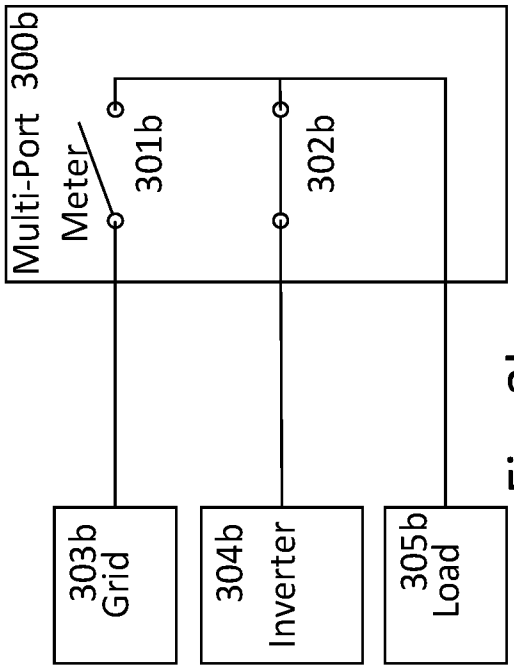

Fig. 3b

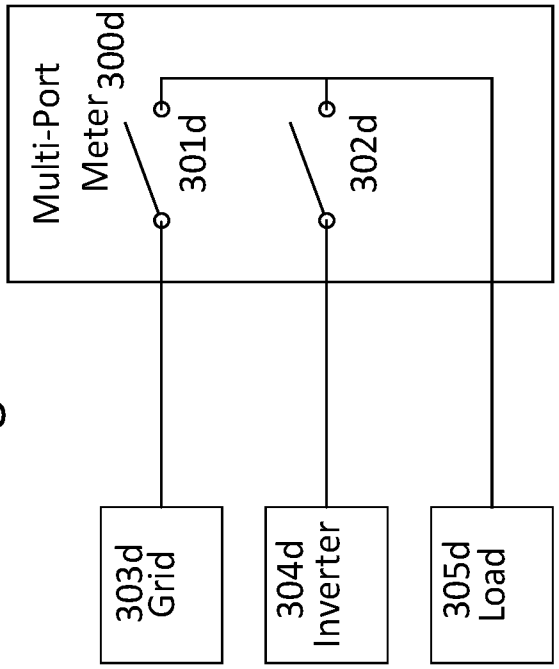

Fig. 3d

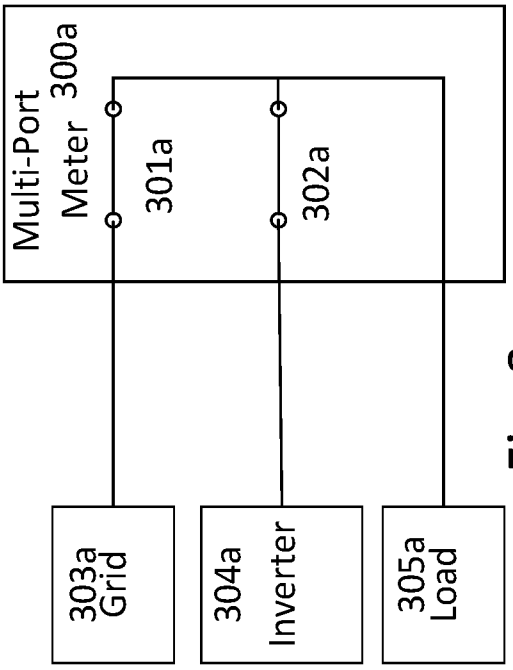

Fig. 3a

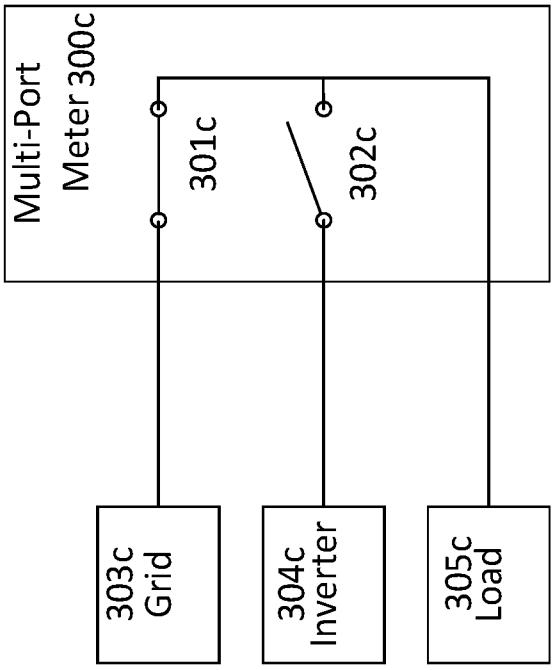

Fig. 3c

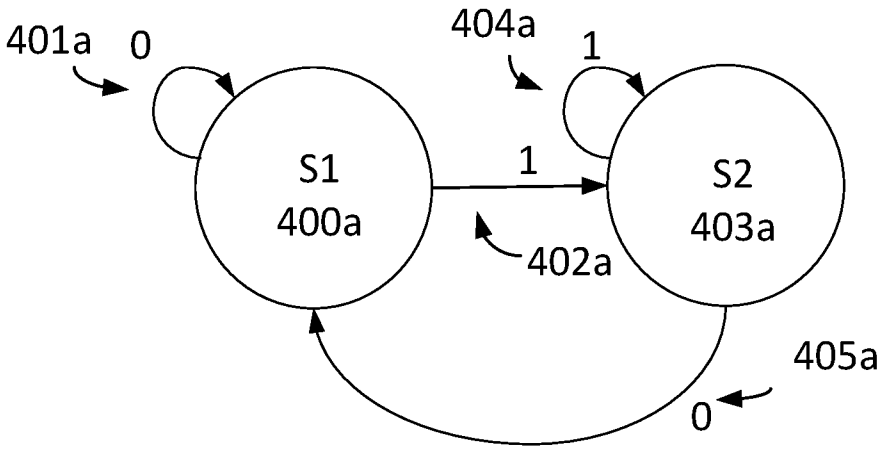
401a
0
404a
1
S1
400a
1
S2
403a
402a
405a
0

Fig. 4a

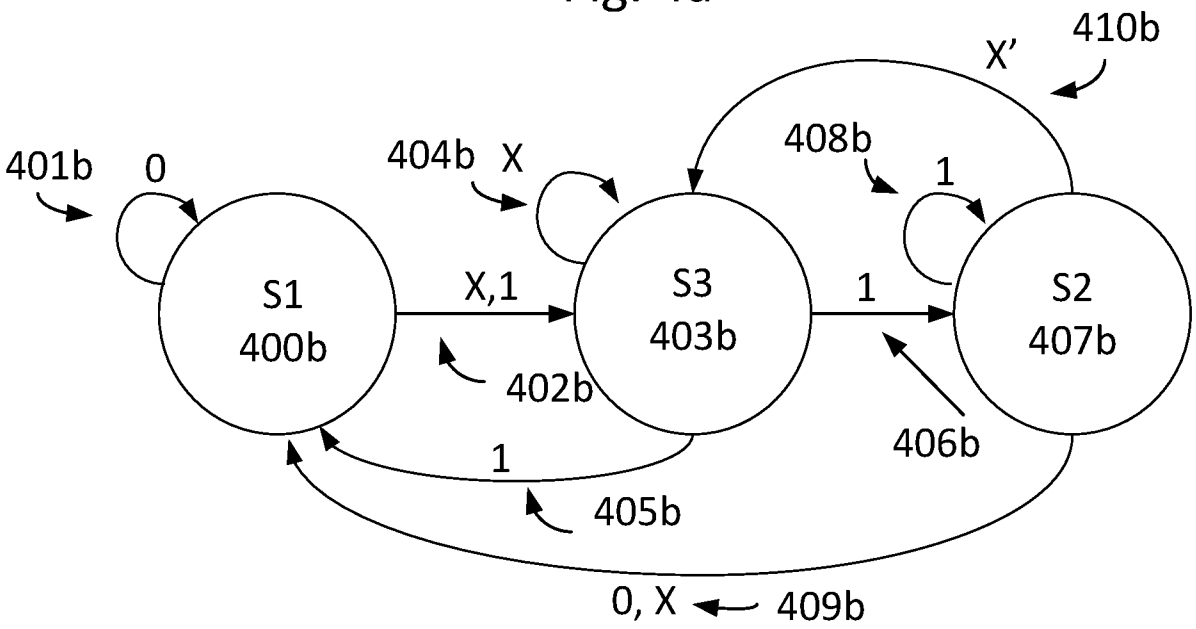
410b
X'
401b
0
404b
X
408b
1
S1
400b
X,1
S3
403b
1
S2
407b
402b
406b
1
405b
0, X
409b

Fig. 4b

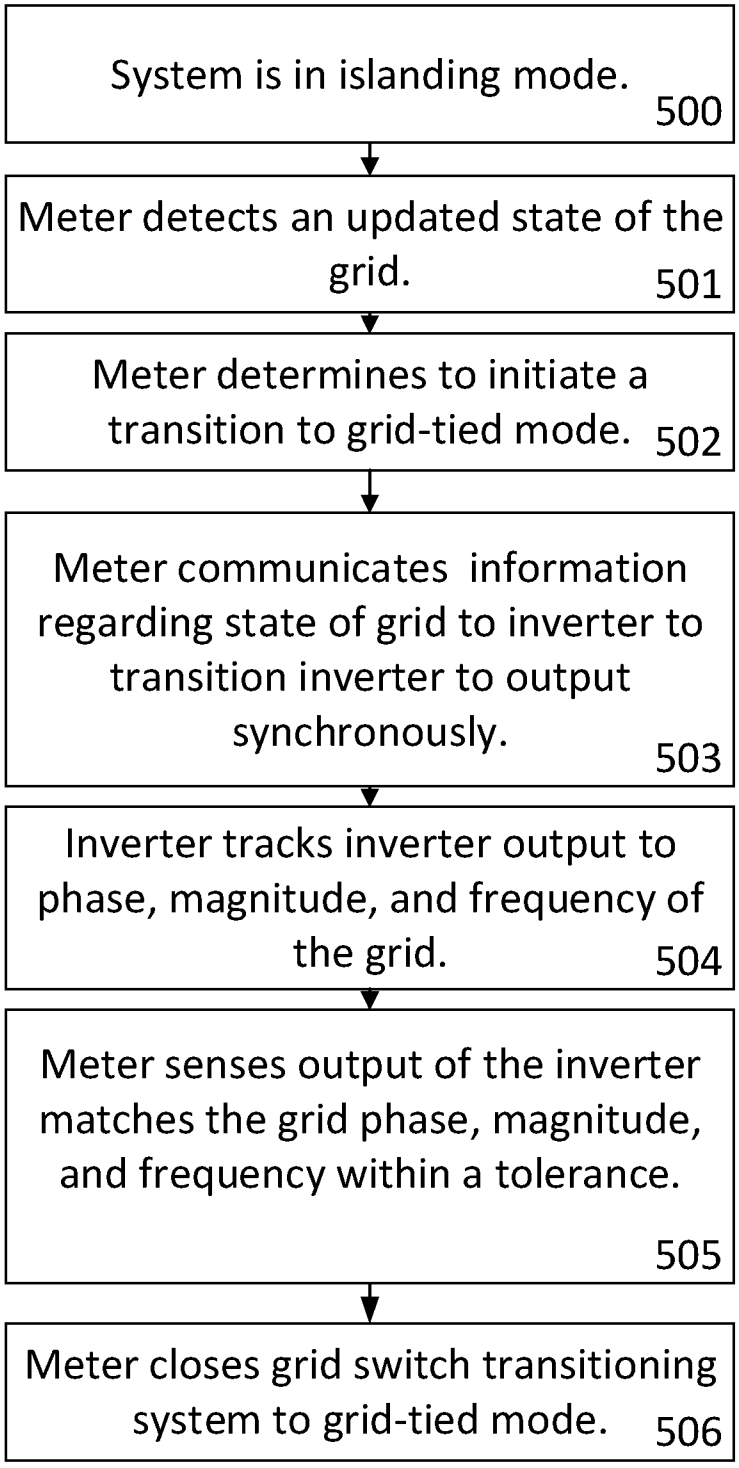
System is in islanding mode.
500
Meter detects an updated state of the grid.
501
Meter determines to initiate a transition to grid-tied mode.
502
Meter communicates information regarding state of grid to inverter to transition inverter to output synchronously.
503
Inverter tracks inverter output to phase, magnitude, and frequency of the grid.
504
Meter senses output of the inverter matches the grid phase, magnitude, and frequency within a tolerance.
505
Meter closes grid switch transitioning system to grid-tied mode.
506

Fig. 5

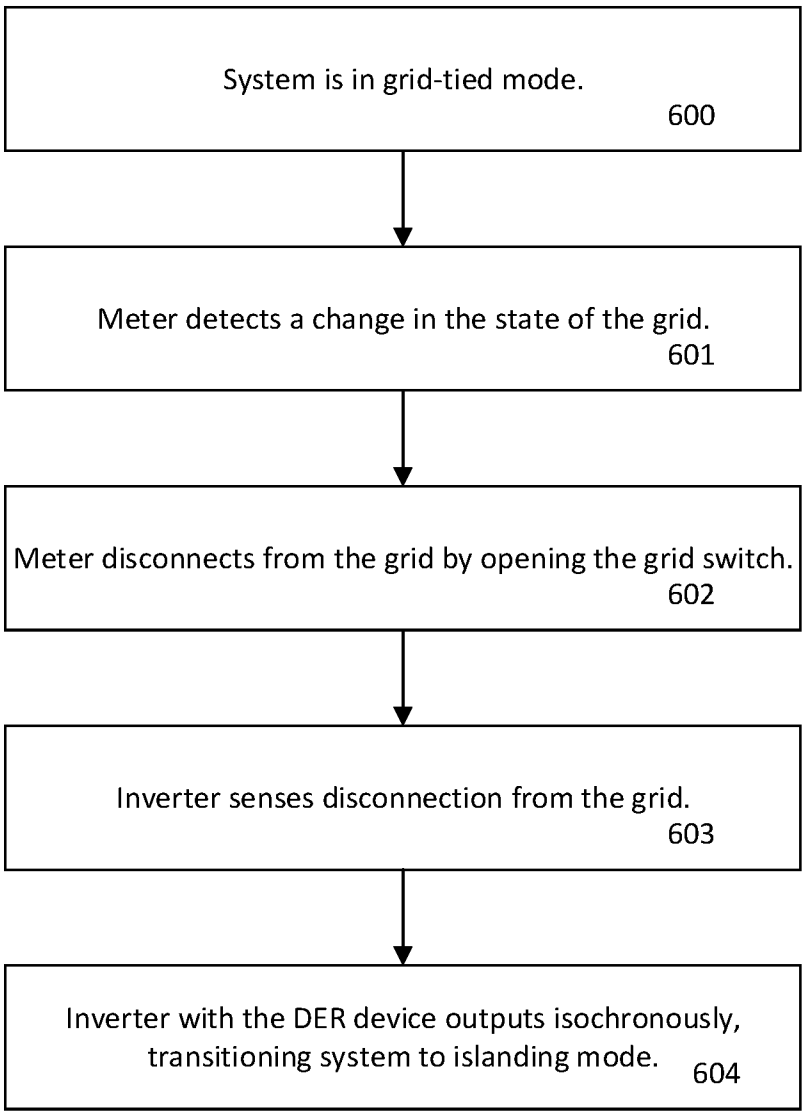
System is in grid-tied mode.
600
Meter detects a change in the state of the grid.
601
Meter disconnects from the grid by opening the grid switch.
602
Inverter senses disconnection from the grid.
603
Inverter with the DER device outputs isochronously, transitioning system to islanding mode.
604

Fig. 6

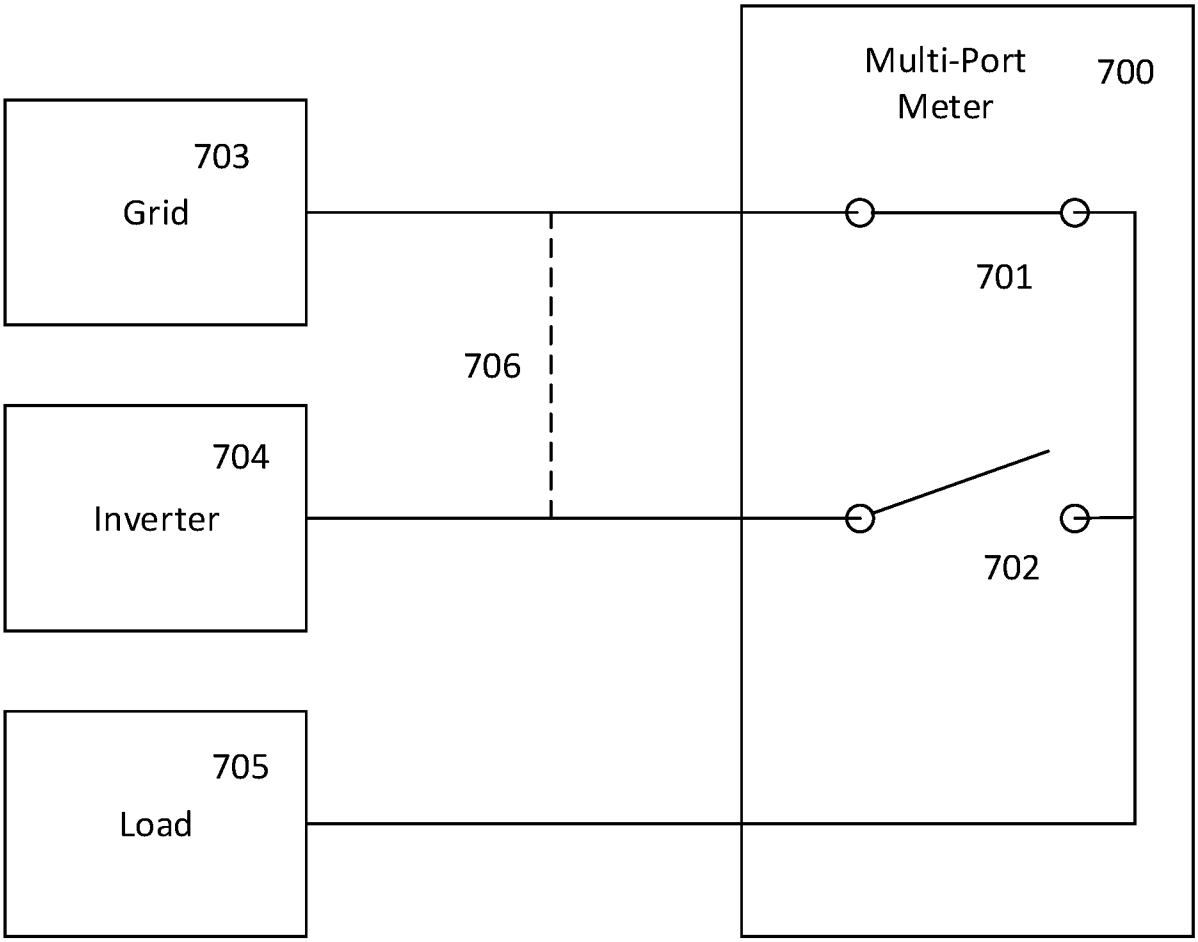
Multi-Port
Meter
700
703
Grid
701
706
704
Inverter
702
705
Load

Fig. 7

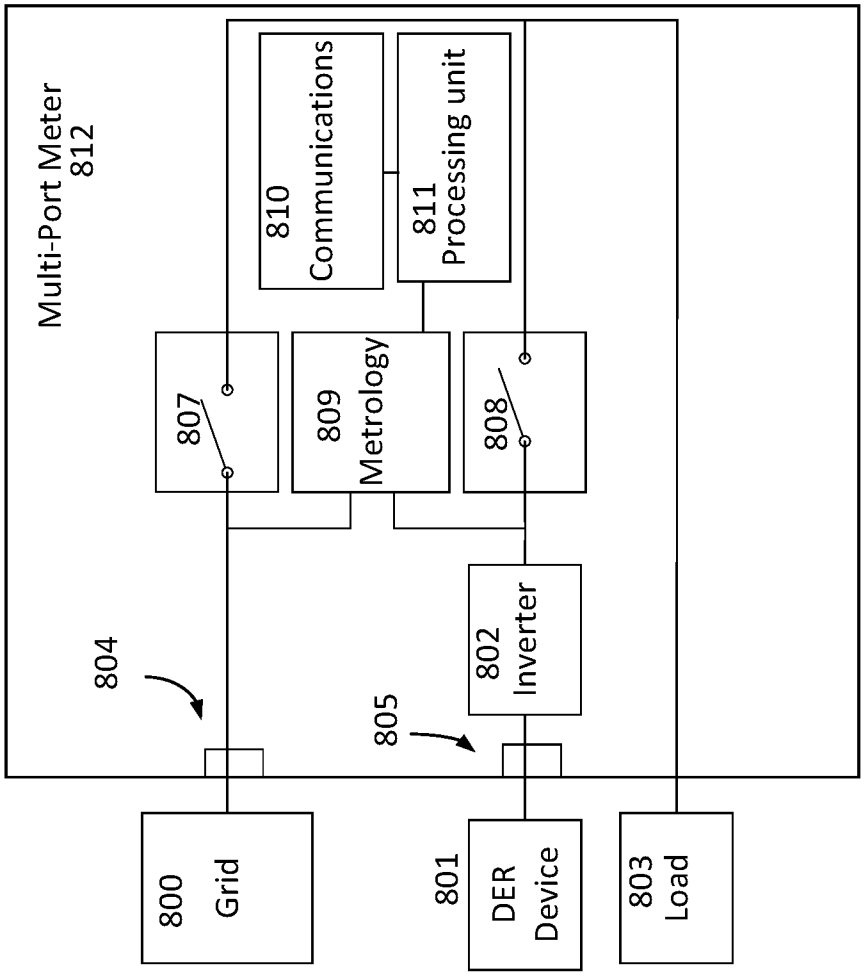
Multi-Port Meter
812
810
Communications
811
Processing unit
807
809
Metrology
808
802
Inverter
804
805
800
Grid
801
DER
Device
803
Load

Fig. 8

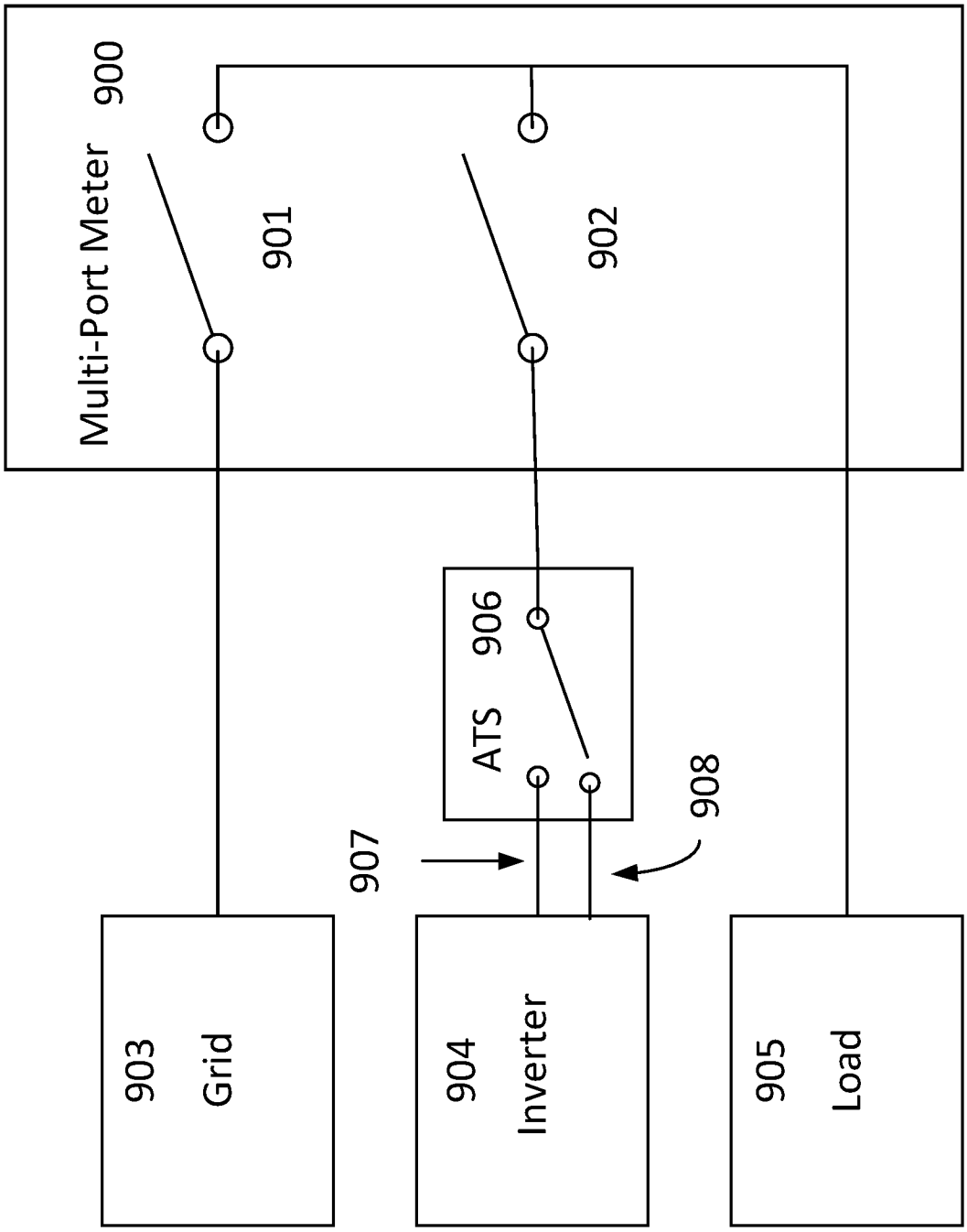
Multi-Port Meter 900
901
902
ATS 906
907
908
903 Grid
904 Inverter
905 Load

Fig. 9