(12) INTERNATIONAL APPLICATION PUBLISHED UNDER THE PATENT COOPERATION TREATY (PCT)

(19) World Intellectual Property Organization
International Bureau

(43) International Publication Date
11 May 2006 (11.05.2006)

PCT

(10) International Publication Number
WO 2006/048018 A1

(51) International Patent Classification:
A01G 27/00 (2006.01) *F16K 31/00* (2006.01)

(21) International Application Number:
PCT/DK2005/000701

(22) International Filing Date:
3 November 2005 (03.11.2005)

(25) Filing Language: Danish

(26) Publication Language: English

(30) Priority Data:
PA 2004 01694 4 November 2004 (04.11.2004) DK

(71) Applicant *(for all designated States except US)*: **IDEKONTORET APS** [DK/DK]; Tinggårdsvænget 2A, Tune, DK-4000 Roskilde (DK).

(72) Inventors; and
(75) Inventors/Applicants *(for US only)*: **ANDERSEN, Tom, Juul** [DK/DK]; Tinggårdsvænget 2 A Tune, DK-4000 Roskilde (DK). **BOYE, Bo** [DK/DK]; Carinaparken 79, DK-3460 Birkerød (DK).

(74) Agents: **ROHDE, Vibeke, Warberg** et al.; Internationalt Patent Bureau A/S, Høje Taastrup Boulevard 23, DK-2630 Taastrup (DK).

(81) Designated States *(unless otherwise indicated, for every kind of national protection available)*: AE, AG, AL, AM, AT, AU, AZ, BA, BB, BG, BR, BW, BY, BZ, CA, CH, CN, CO, CR, CU, CZ, DE, DK, DM, DZ, EC, EE, EG, ES, FI, GB, GD, GE, GH, GM, HR, HU, ID, IL, IN, IS, JP, KE, KG, KM, KN, KP, KR, KZ, LC, LK, LR, LS, LT, LU, LV, LY, MA, MD, MG, MK, MN, MW, MX, MZ, NA, NG, NI, NO, NZ, OM, PG, PH, PL, PT, RO, RU, SC, SD, SE, SG, SK, SL, SM, SY, TJ, TM, TN, TR, TT, TZ, UA, UG, US, UZ, VC, VN, YU, ZA, ZM, ZW.

(84) Designated States *(unless otherwise indicated, for every kind of regional protection available)*: ARIPO (BW, GH, GM, KE, LS, MW, MZ, NA, SD, SL, SZ, TZ, UG, ZM, ZW), Eurasian (AM, AZ, BY, KG, KZ, MD, RU, TJ, TM), European (AT, BE, BG, CH, CY, CZ, DE, DK, EE, ES, FI, FR, GB, GR, HU, IE, IS, IT, LT, LU, LV, MC, NL, PL, PT, RO, SE, SI, SK, TR), OAPI (BF, BJ, CF, CG, CI, CM, GA, GN, GQ, GW, ML, MR, NE, SN, TD, TG).

Published:
— *with international search report*
— *with amended claims*

For two-letter codes and other abbreviations, refer to the "Guidance Notes on Codes and Abbreviations" appearing at the beginning of each regular issue of the PCT Gazette.

(54) **Title:** A DEVICE AND A METHOD FOR DOSAGE OF FLUIDS

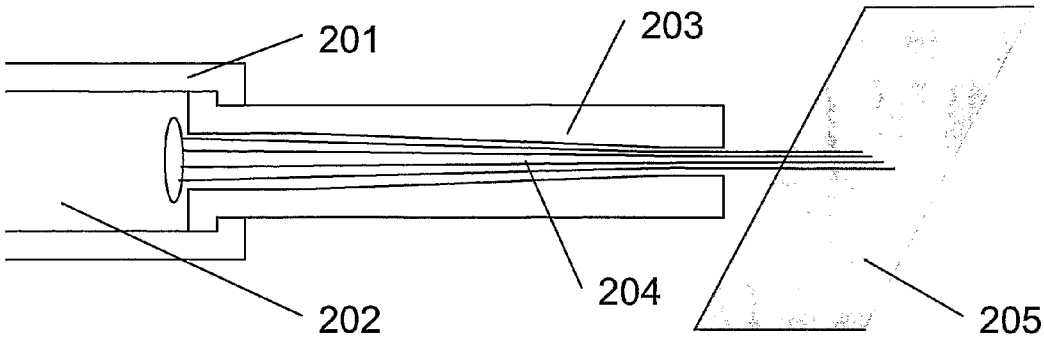

(57) **Abstract:** A device and a method for continuous and adjustable dosage of fluids at low pressure. The invention is self-cleaning and low tech. It consists of a tapering dosage unit in which a filling, which allows fluids to pass in the longitudinal direction of the dosage unit, is inserted. At the outlet end of the dosage unit, a venturi tube is located which clamps the filling and thereby create a nozzle opening that fits the fluids viscosity and the pressure for a given desired dosage. When the dosage unit clogs, a flushing can be obtained by either increasing the pressure of the fluid and thereby forcing a flexible dosage unit to increase the sectional area and allow cleaning or in the same way through a mechanical opening of the dosage unit.

WO 2006/048018 A1