FIG. 1

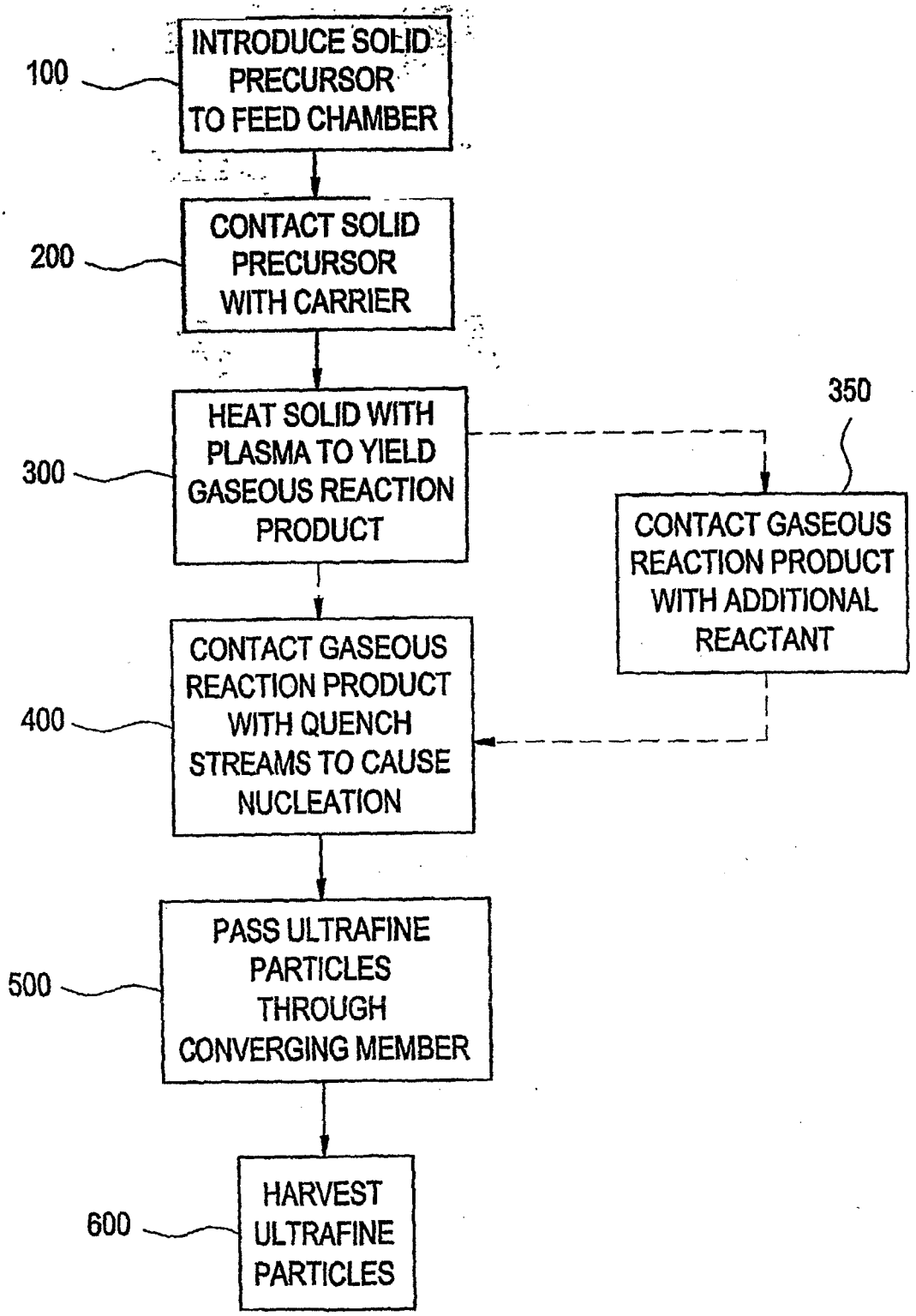
INTRODUCE SOLID PRECURSOR TO FEED CHAMBER
100
CONTACT SOLID PRECURSOR WITH CARRIER
200
HEAT SOLID WITH PLASMA TO YIELD GASEOUS REACTION PRODUCT
300
350
CONTACT GASEOUS REACTION PRODUCT WITH ADDITIONAL REACTANT
CONTACT GASEOUS REACTION PRODUCT WITH QUENCH STREAMS TO CAUSE NUCLEATION
400
PASS ULTRAFINE PARTICLES THROUGH CONVERGING MEMBER
500
HARVEST ULTRAFINE PARTICLES
600

FIG. 2

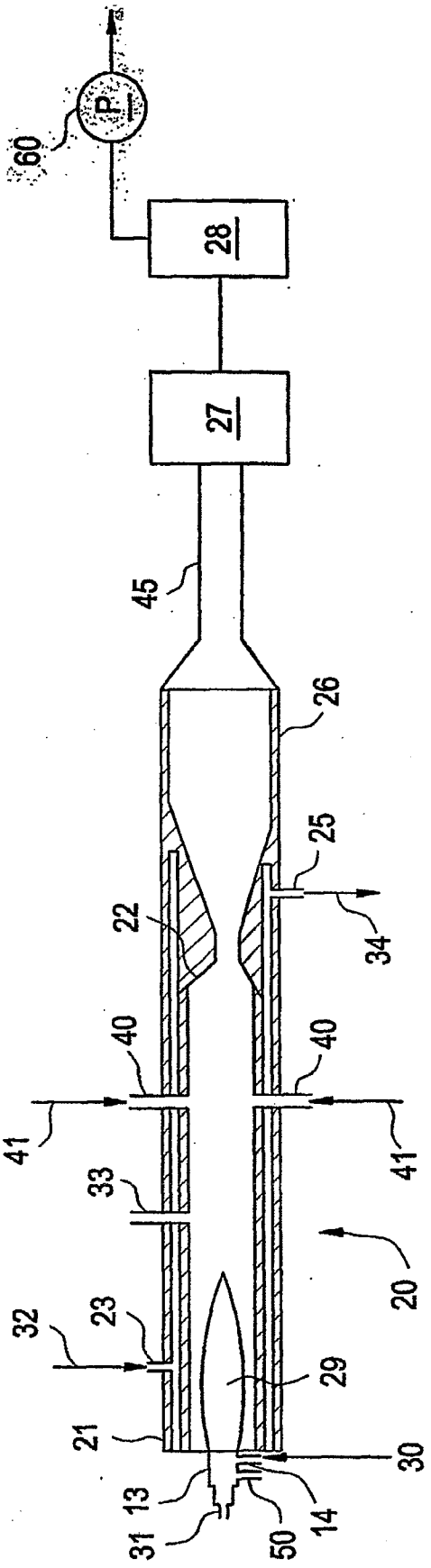

FIG. 3

