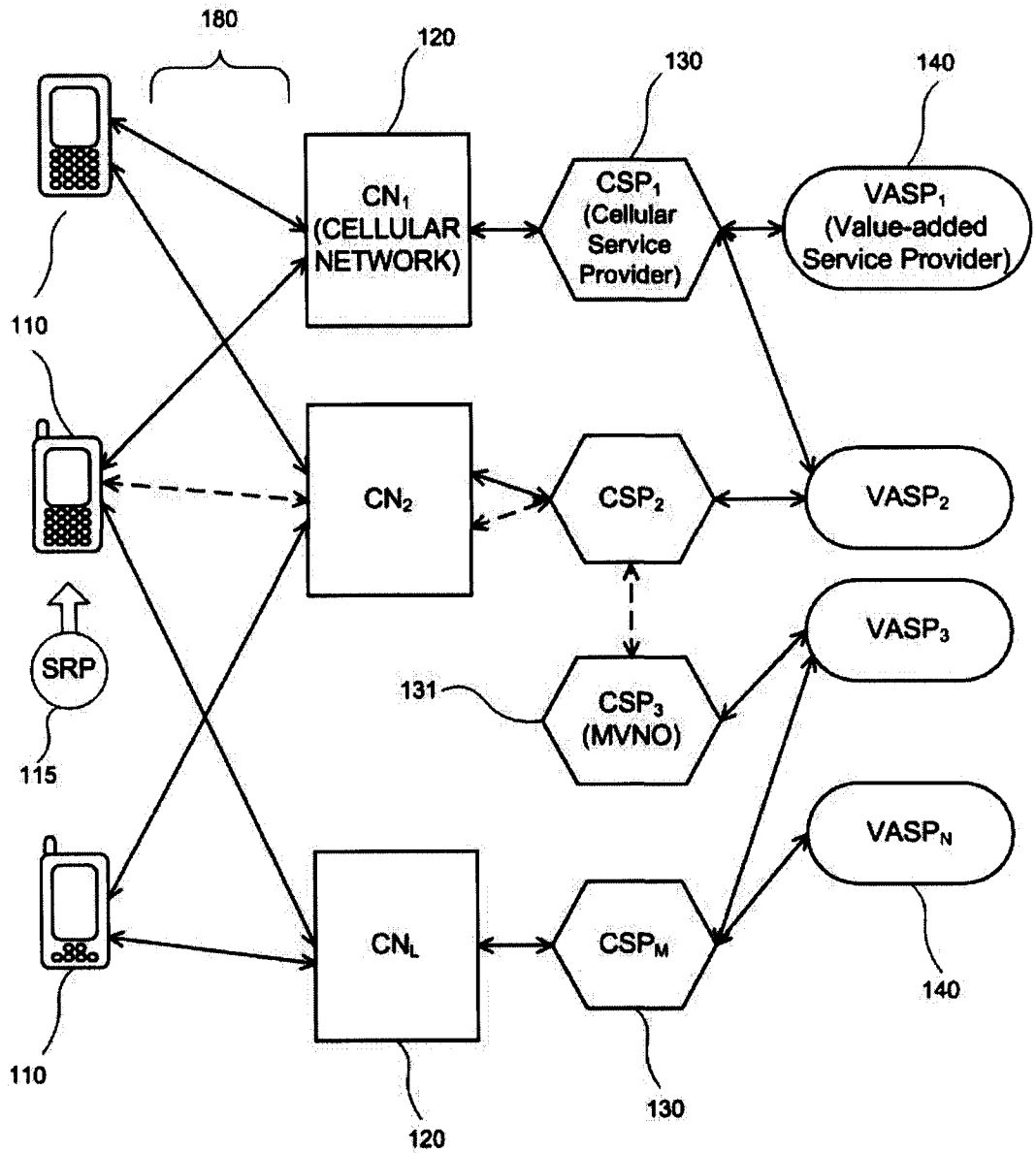
180
120
130
140
CN1 (CELLULAR NETWORK)
CSP1 (Cellular Service Provider)
VASP1 (Value-added Service Provider)
110
CN2
CSP2
VASP2
SRP
115
131
CSP3 (MVNO)
VASP3
VASPN
CNL
CSPM
140
110
130
120
100

FIG.1

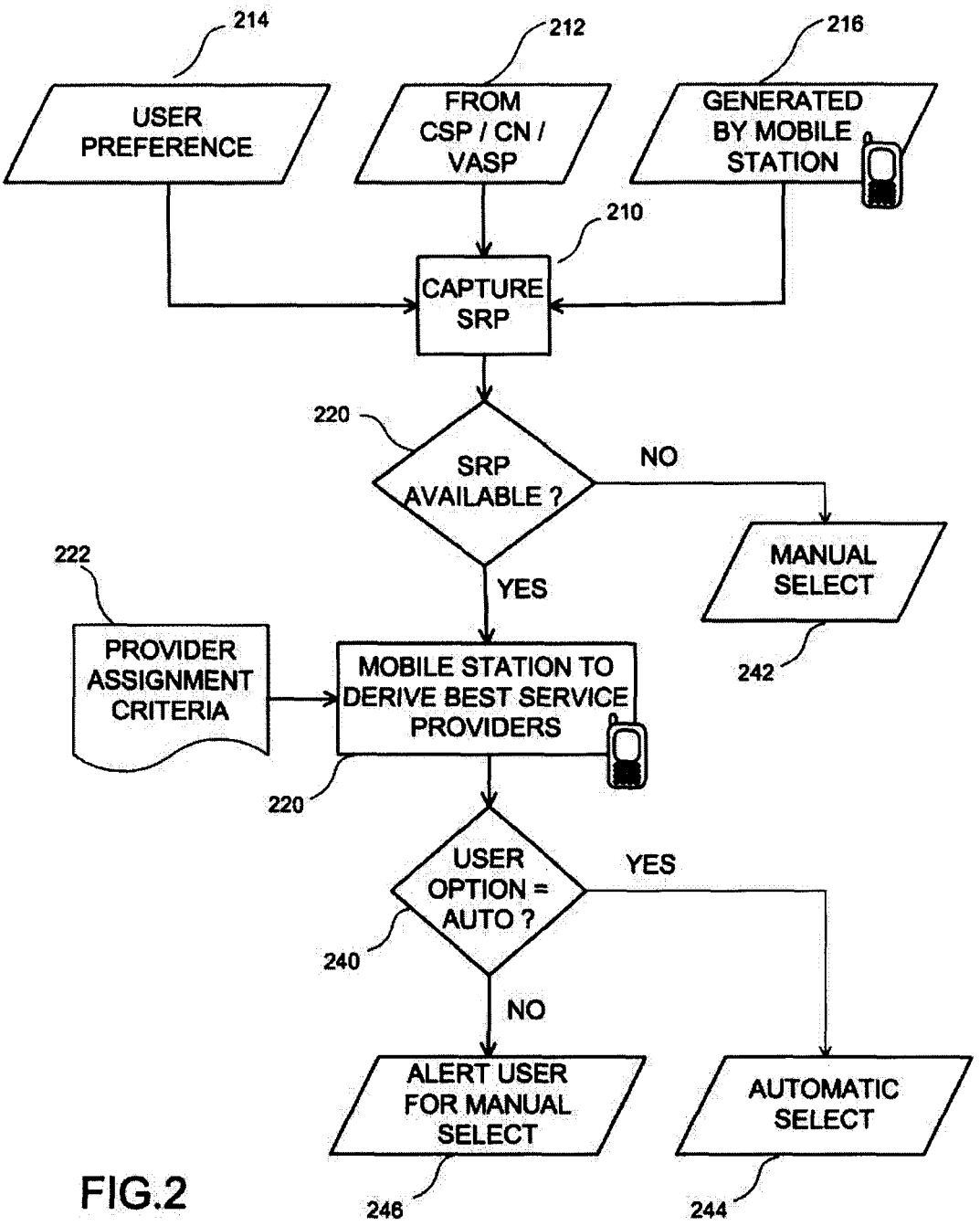
214
USER PREFERENCE
212
FROM CSP / CN / VASP
216
GENERATED BY MOBILE STATION
210
CAPTURE SRP
220
SRP AVAILABLE ?
NO
YES
MANUAL SELECT
242
222
PROVIDER ASSIGNMENT CRITERIA
MOBILE STATION TO DERIVE BEST SERVICE PROVIDERS
220
USER OPTION = AUTO ?
240
YES
NO
ALERT USER FOR MANUAL SELECT
246
AUTOMATIC SELECT
244

FIG.2

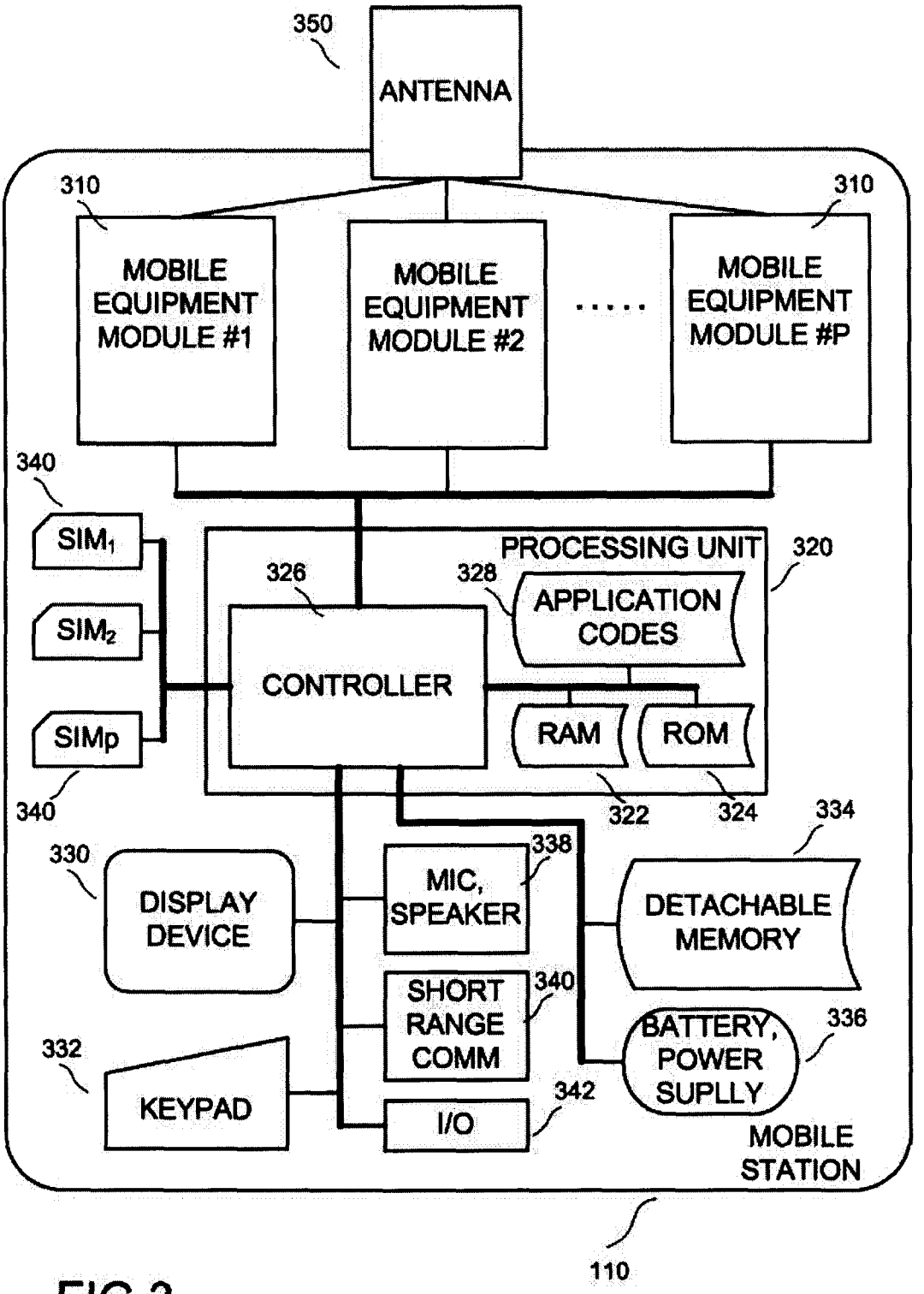
350
ANTENNA
310
310
MOBILE EQUIPMENT MODULE #1
MOBILE EQUIPMENT MODULE #2
.....
MOBILE EQUIPMENT MODULE #P
340
SIM1
SIM2
SIMp
340
PROCESSING UNIT
320
326
328
APPLICATION CODES
CONTROLLER
RAM
ROM
322
324
334
330
338
DISPLAY DEVICE
MIC, SPEAKER
DETACHABLE MEMORY
SHORT RANGE COMM
340
336
BATTERY, POWER SUPLLY
332
KEYPAD
342
I/O
MOBILE STATION
110

FIG.3

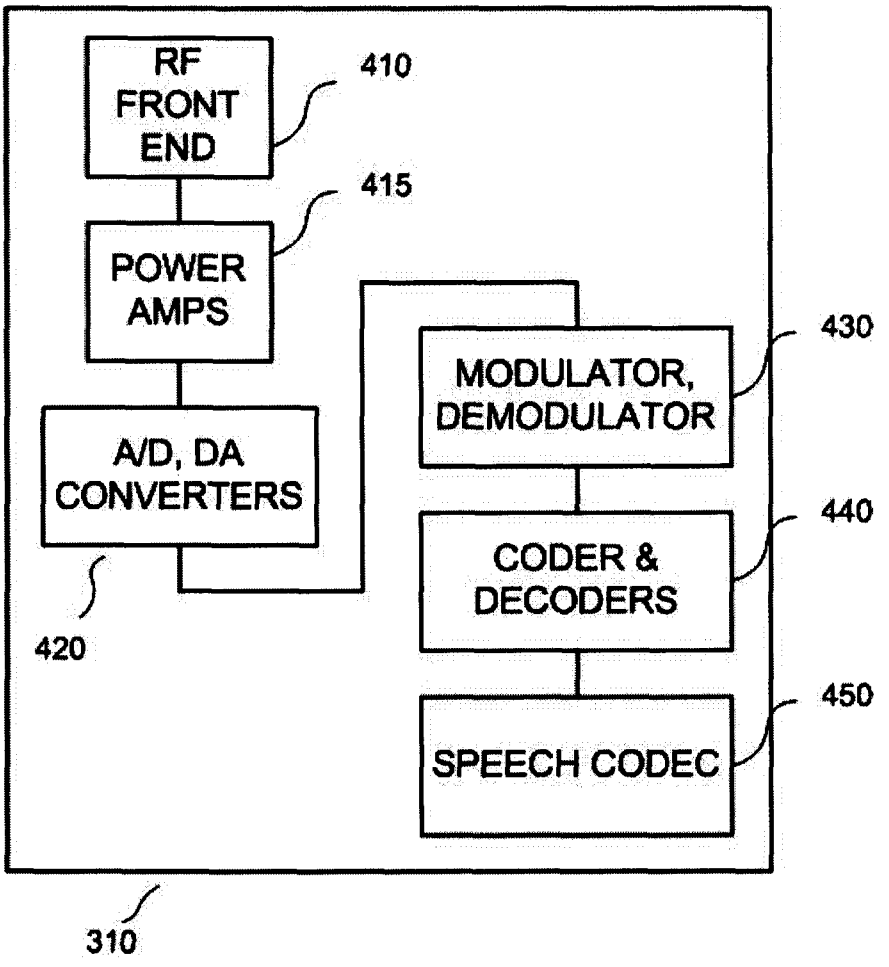
RF FRONT END
410
POWER AMPS
415
A/D, DA CONVERTERS
420
MODULATOR, DEMODULATOR
430
CODER & DECODERS
440
SPEECH CODEC
450
310

FIG.4