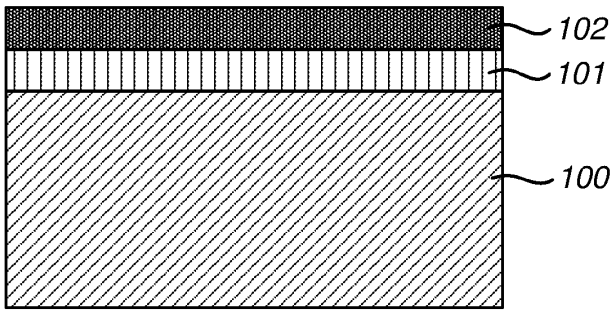

FIG. 1

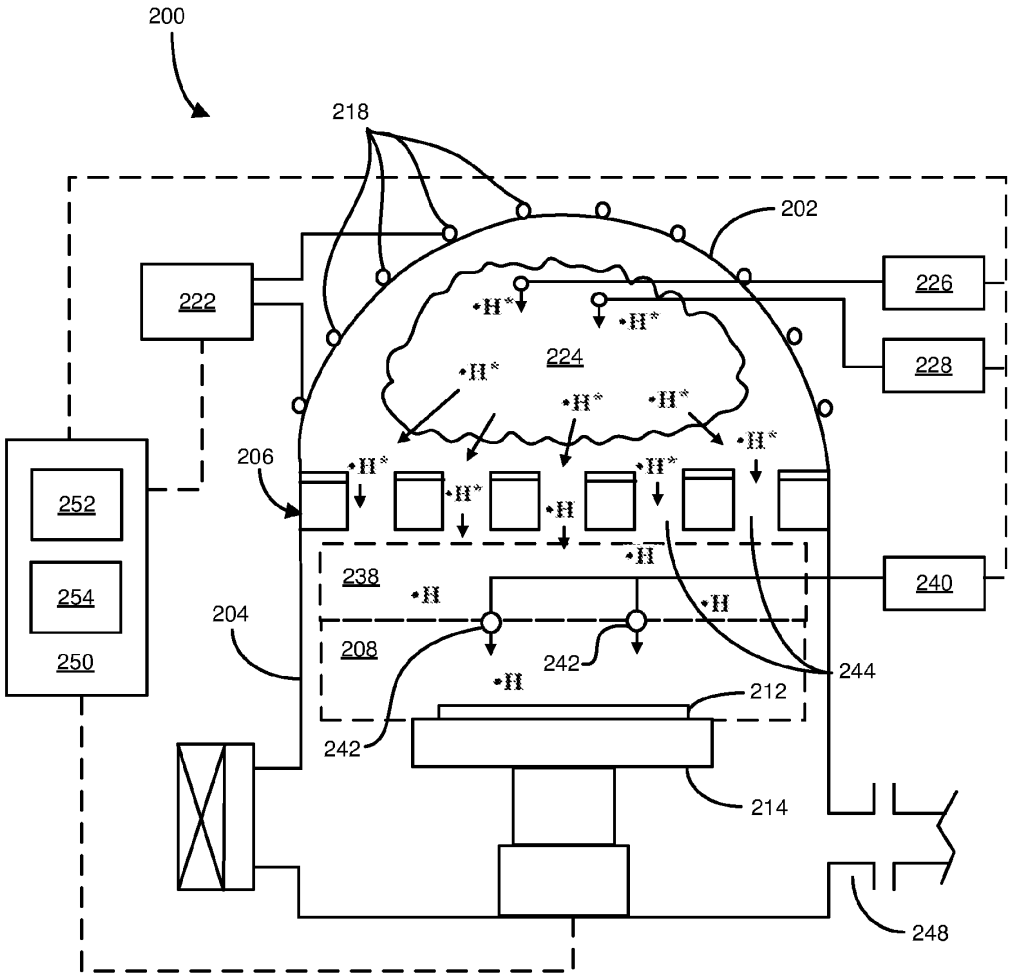
200
218
202
222
226
228
224
206
252
254
250
238
240
204
208
242
244
212
214
248

FIG. 2

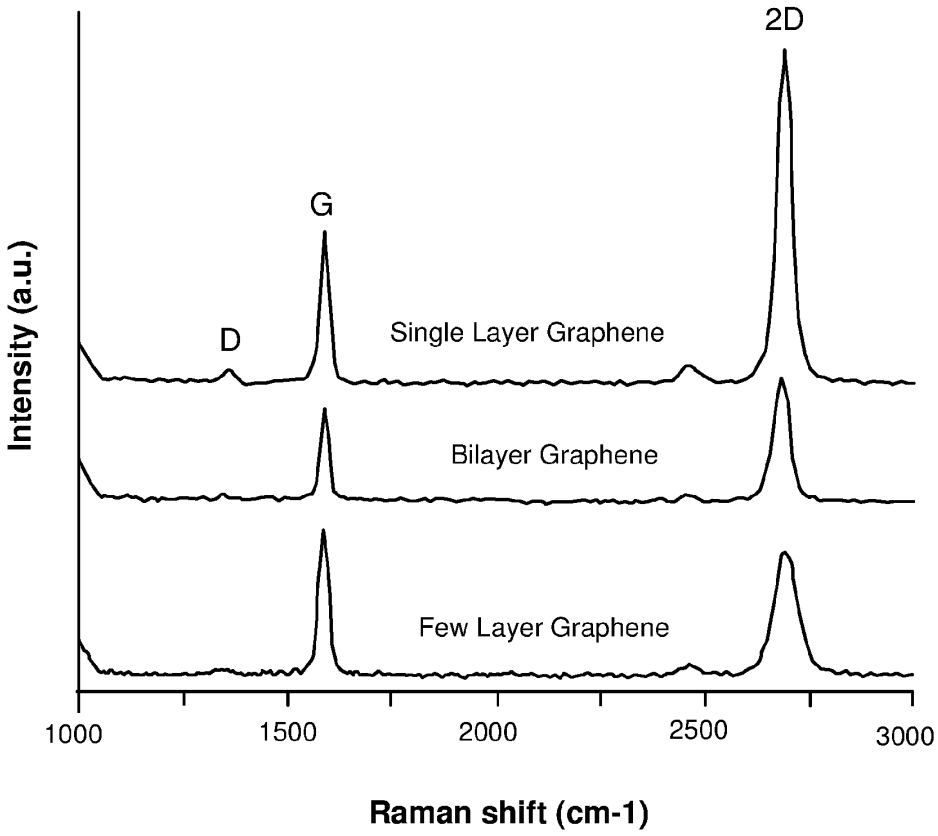
2D
G
D
Single Layer Graphene
Bilayer Graphene
Few Layer Graphene
Intensity (a.u.)
1000
1500
2000
2500
3000
Raman shift (cm-1)

FIG. 3

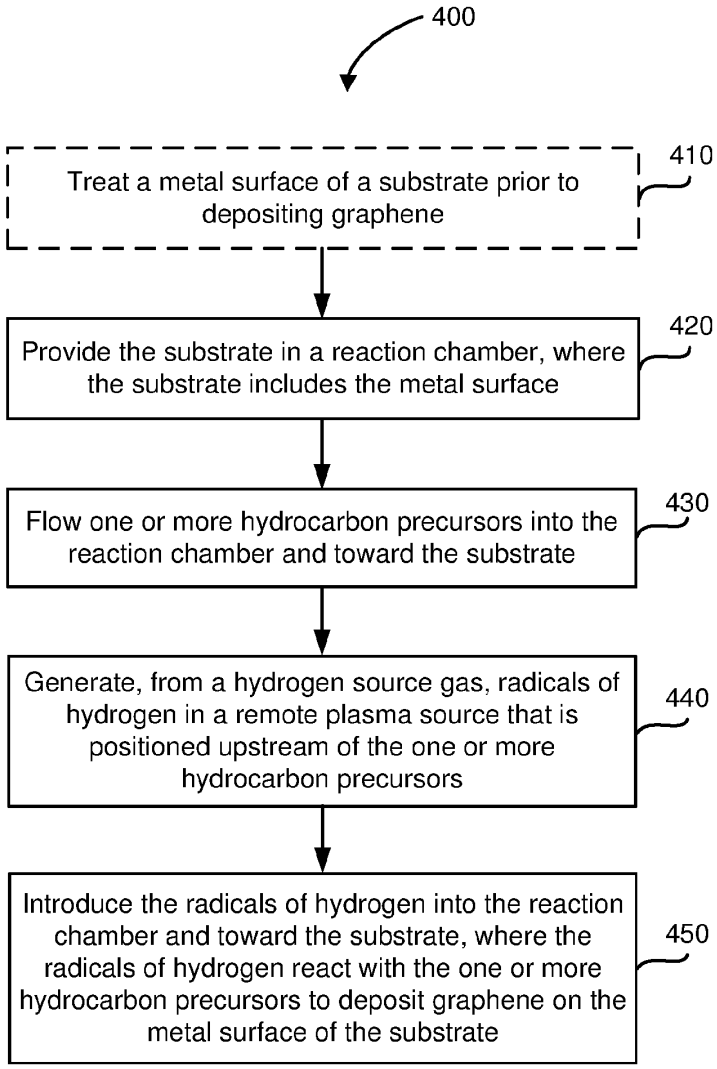
400
Treat a metal surface of a substrate prior to depositing graphene
410
Provide the substrate in a reaction chamber, where the substrate includes the metal surface
420
Flow one or more hydrocarbon precursors into the reaction chamber and toward the substrate
430
Generate, from a hydrogen source gas, radicals of hydrogen in a remote plasma source that is positioned upstream of the one or more hydrocarbon precursors
440
Introduce the radicals of hydrogen into the reaction chamber and toward the substrate, where the radicals of hydrogen react with the one or more hydrocarbon precursors to deposit graphene on the metal surface of the substrate
450

FIG. 4

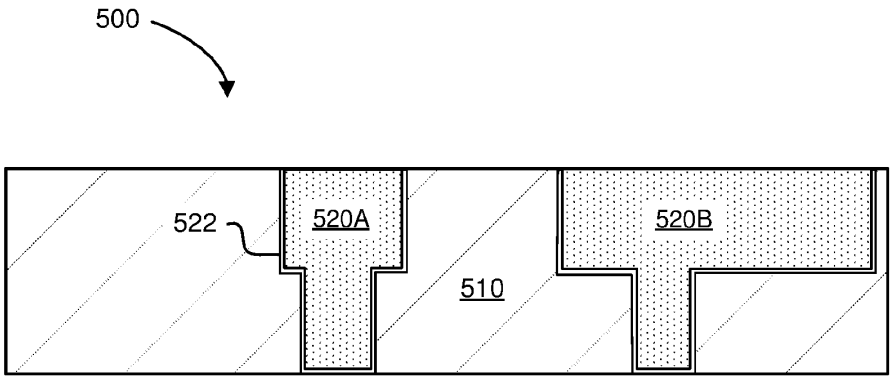

FIGURE 5A

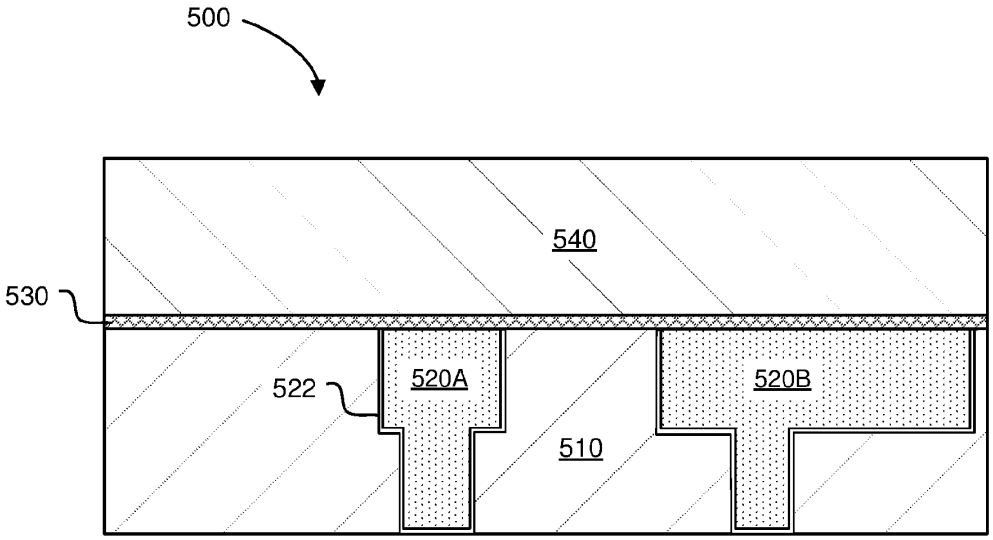

FIGURE 5B

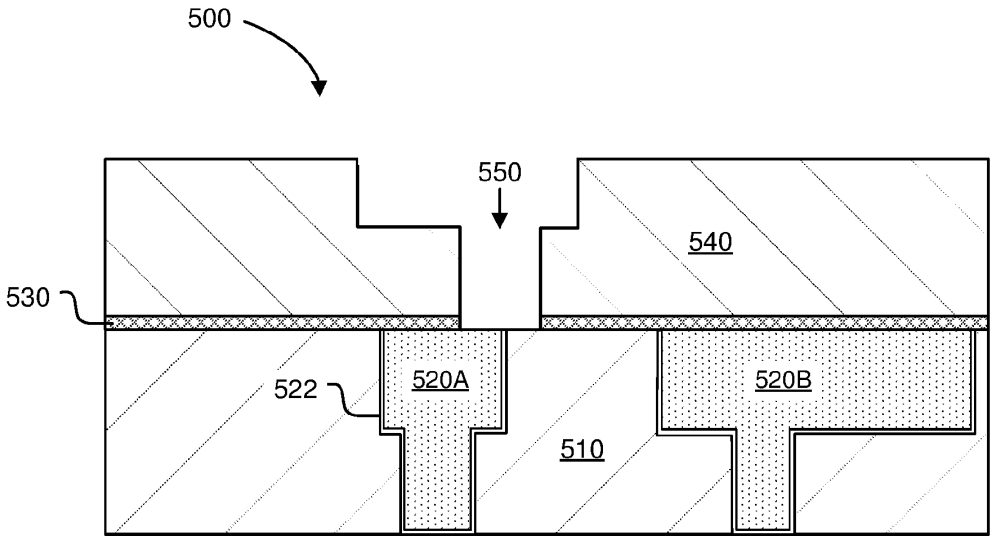

FIGURE 5C

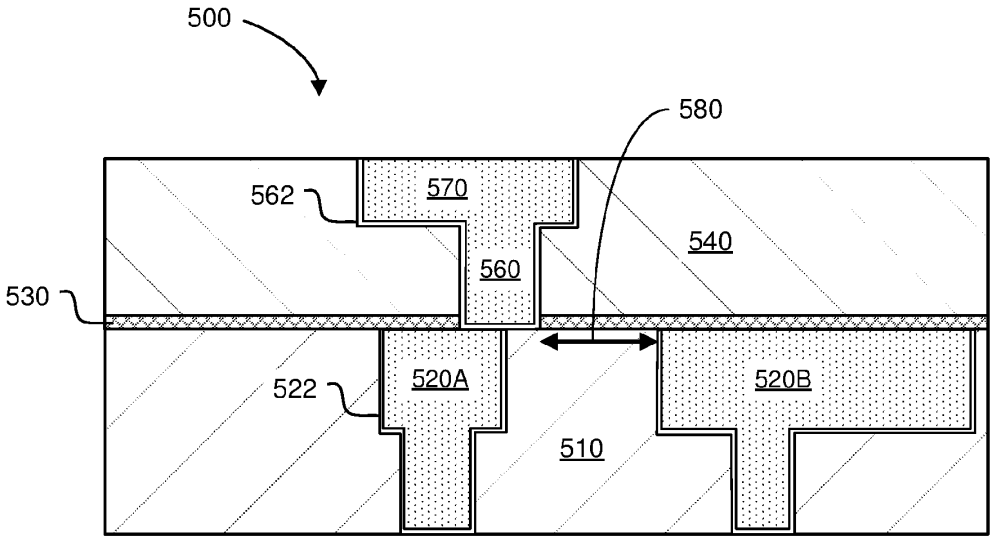

FIGURE 5D

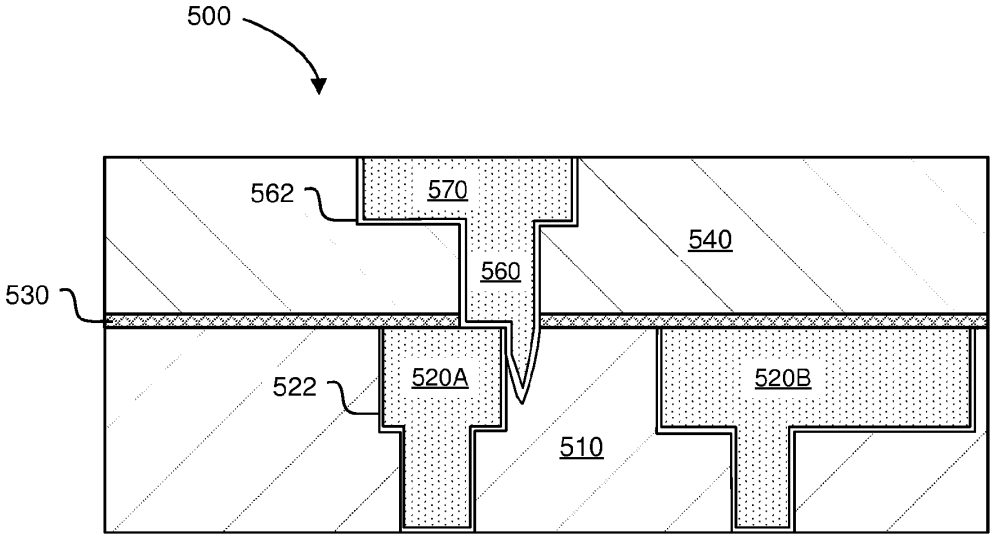

FIGURE 5E

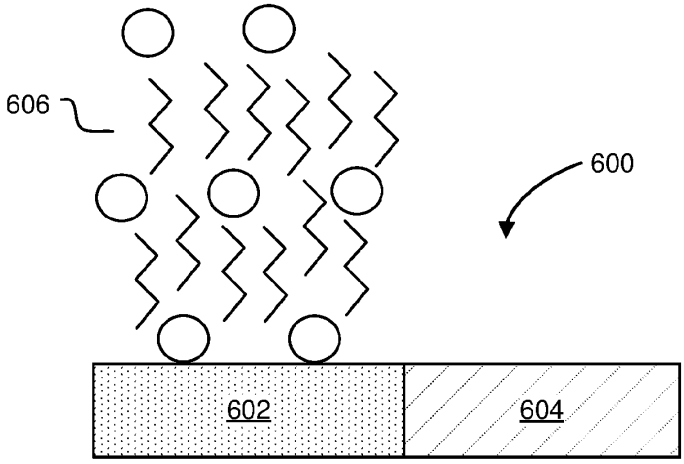

FIG. 6A

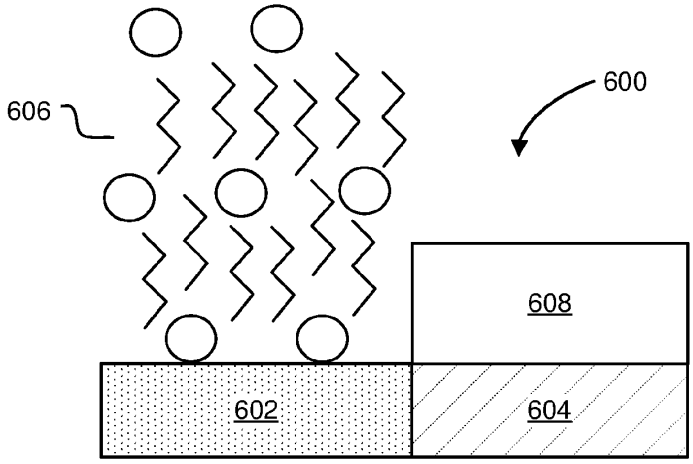

FIG. 6B

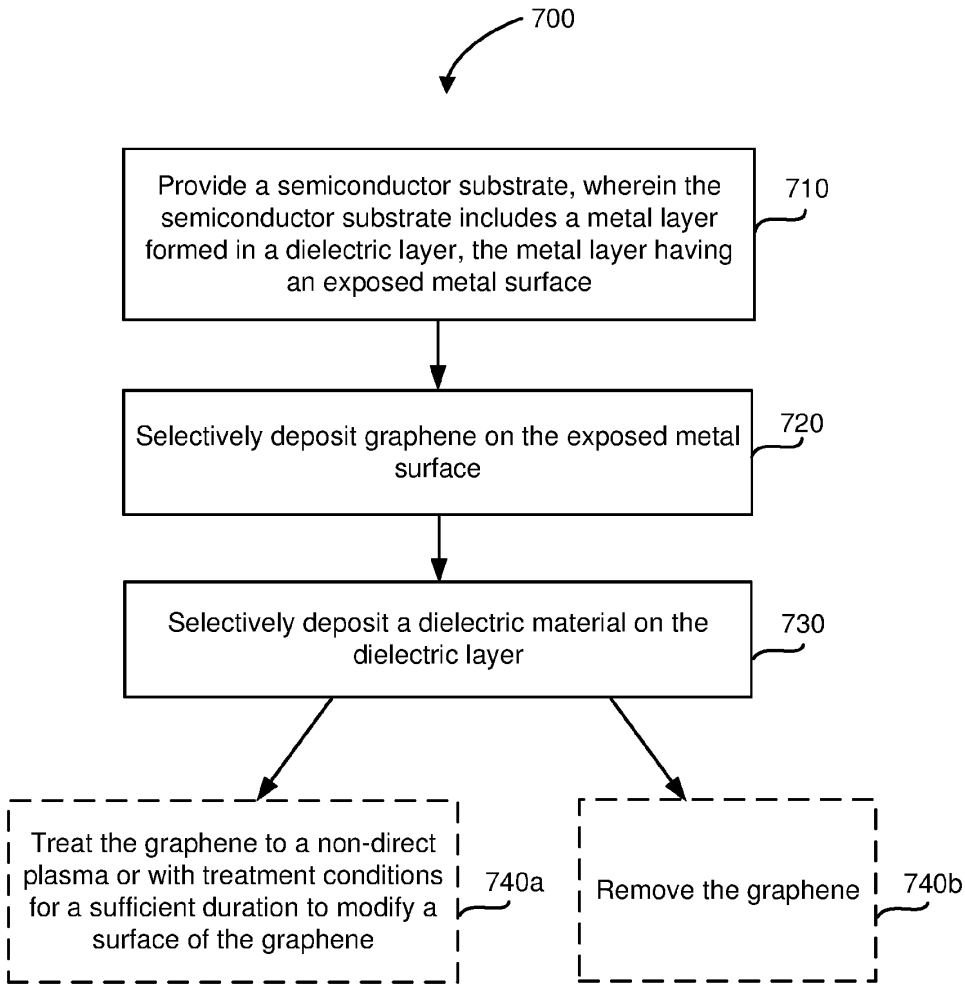
700
Provide a semiconductor substrate, wherein the semiconductor substrate includes a metal layer formed in a dielectric layer, the metal layer having an exposed metal surface
710
Selectively deposit graphene on the exposed metal surface
720
Selectively deposit a dielectric material on the dielectric layer
730
Treat the graphene to a non-direct plasma or with treatment conditions for a sufficient duration to modify a surface of the graphene
740a
Remove the graphene
740b

FIG. 7

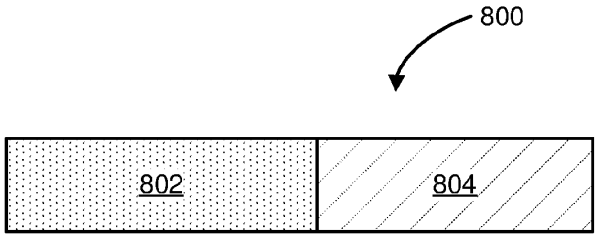

FIG. 8A

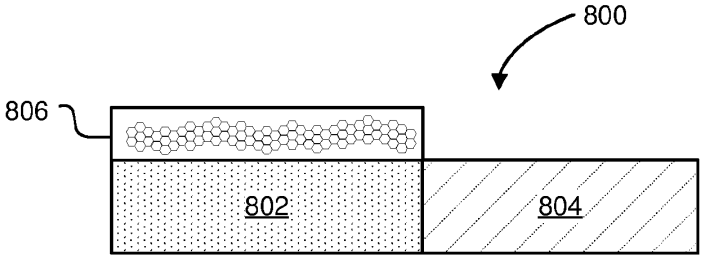

FIG. 8B

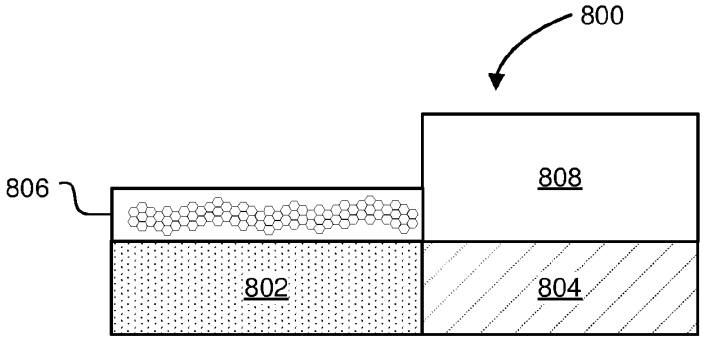

FIG. 8C

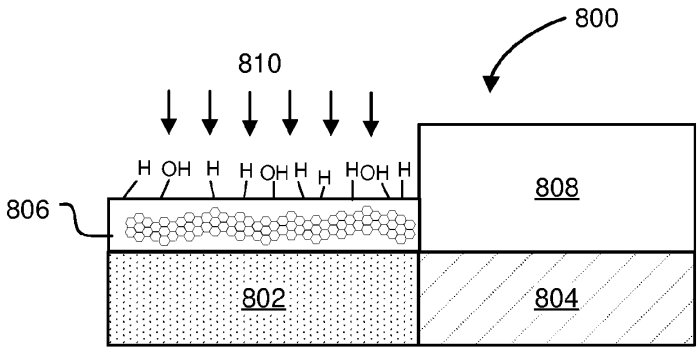

FIG. 8D

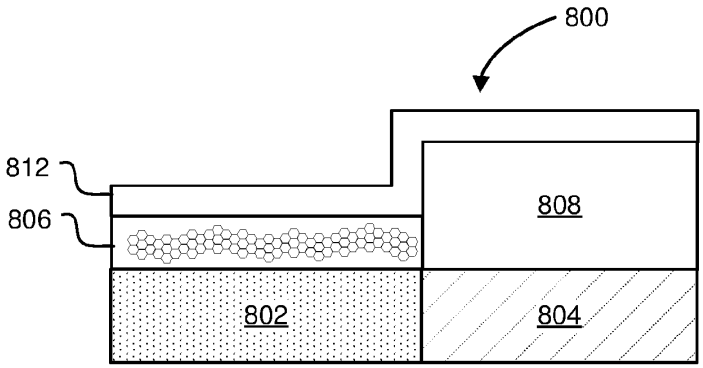

FIG. 8E

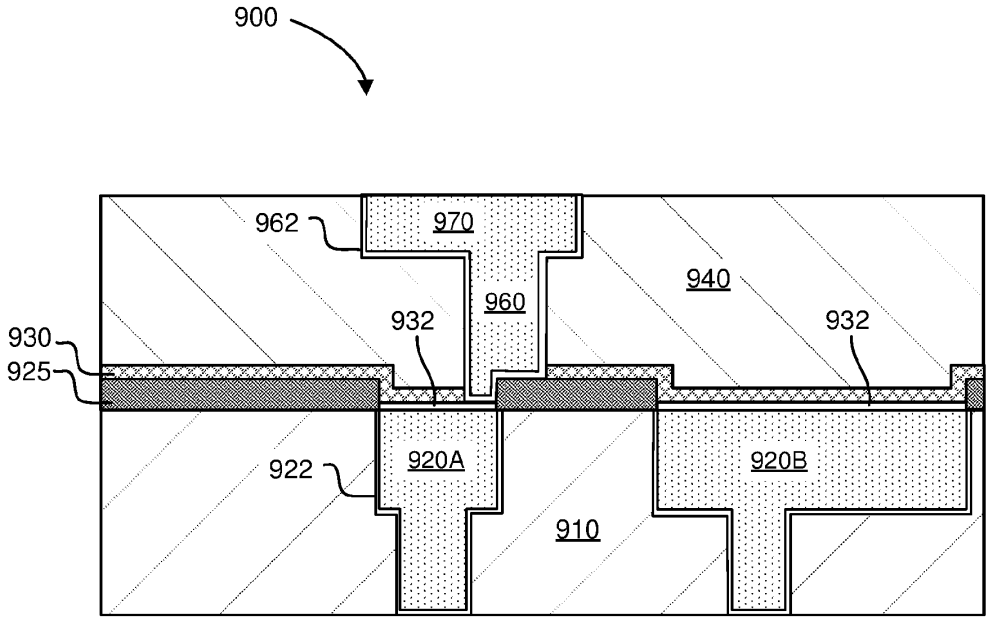

FIGURE 9