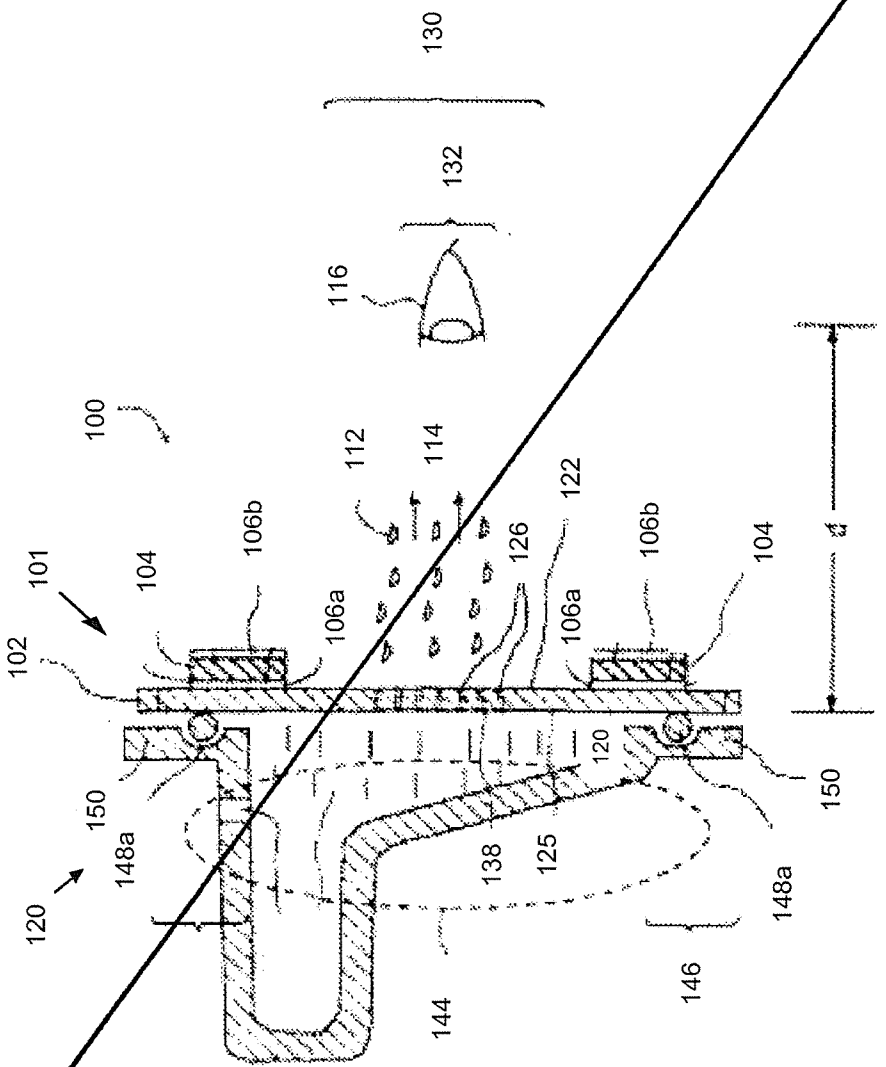
100
101
102
104
106a
106b
112
114
116
120
122
125
126
130
132
138
144
146
148a
150
d

FIG. 1

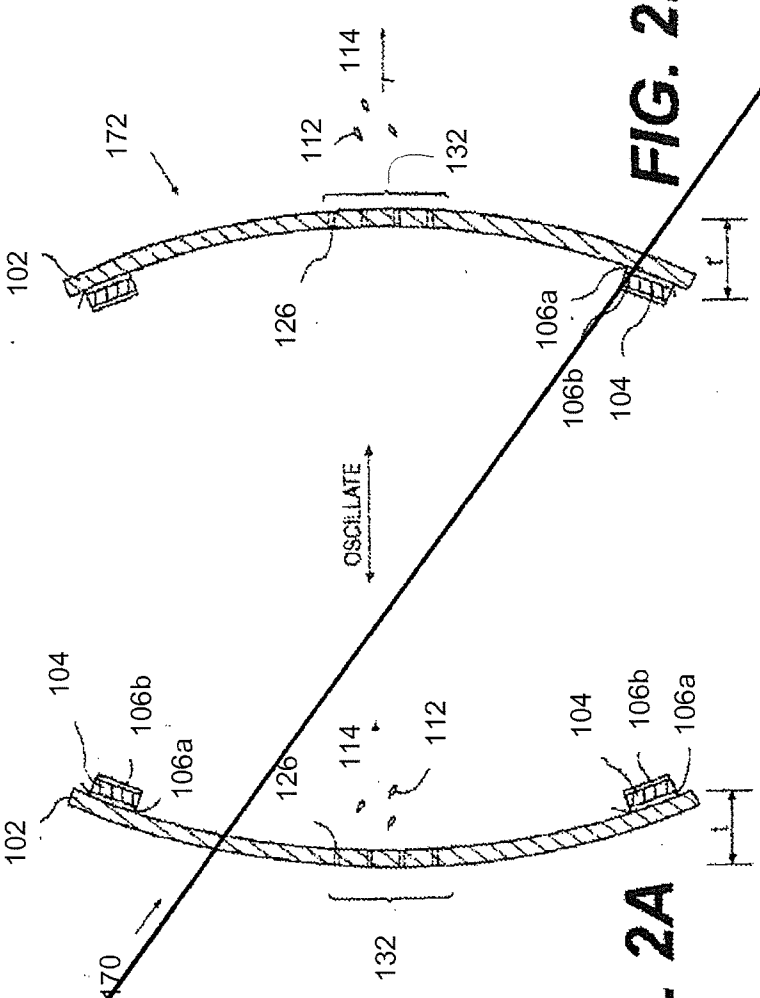

FIG. 2B

FIG. 2A

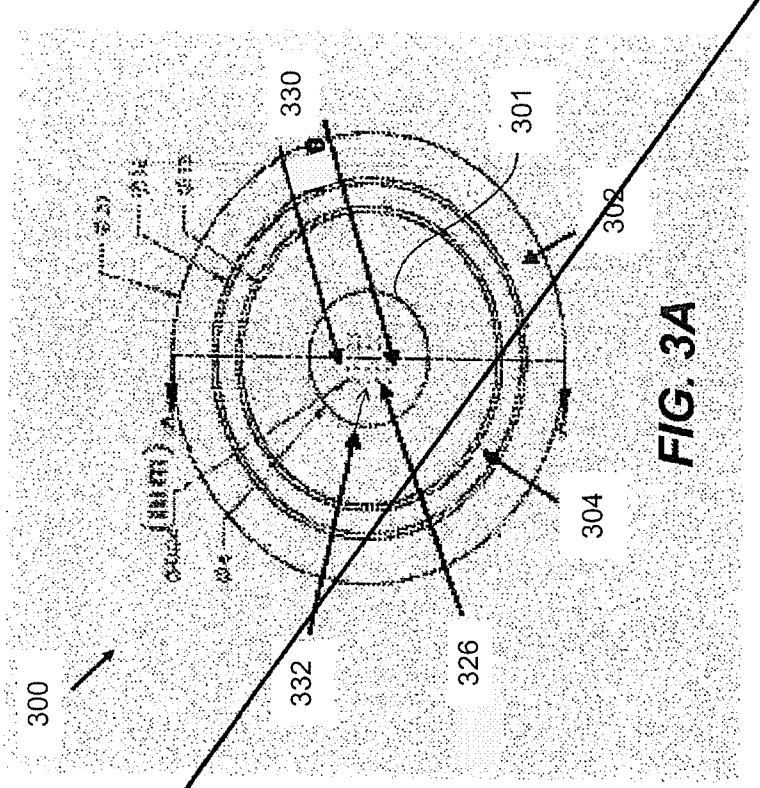

FIG. 3A

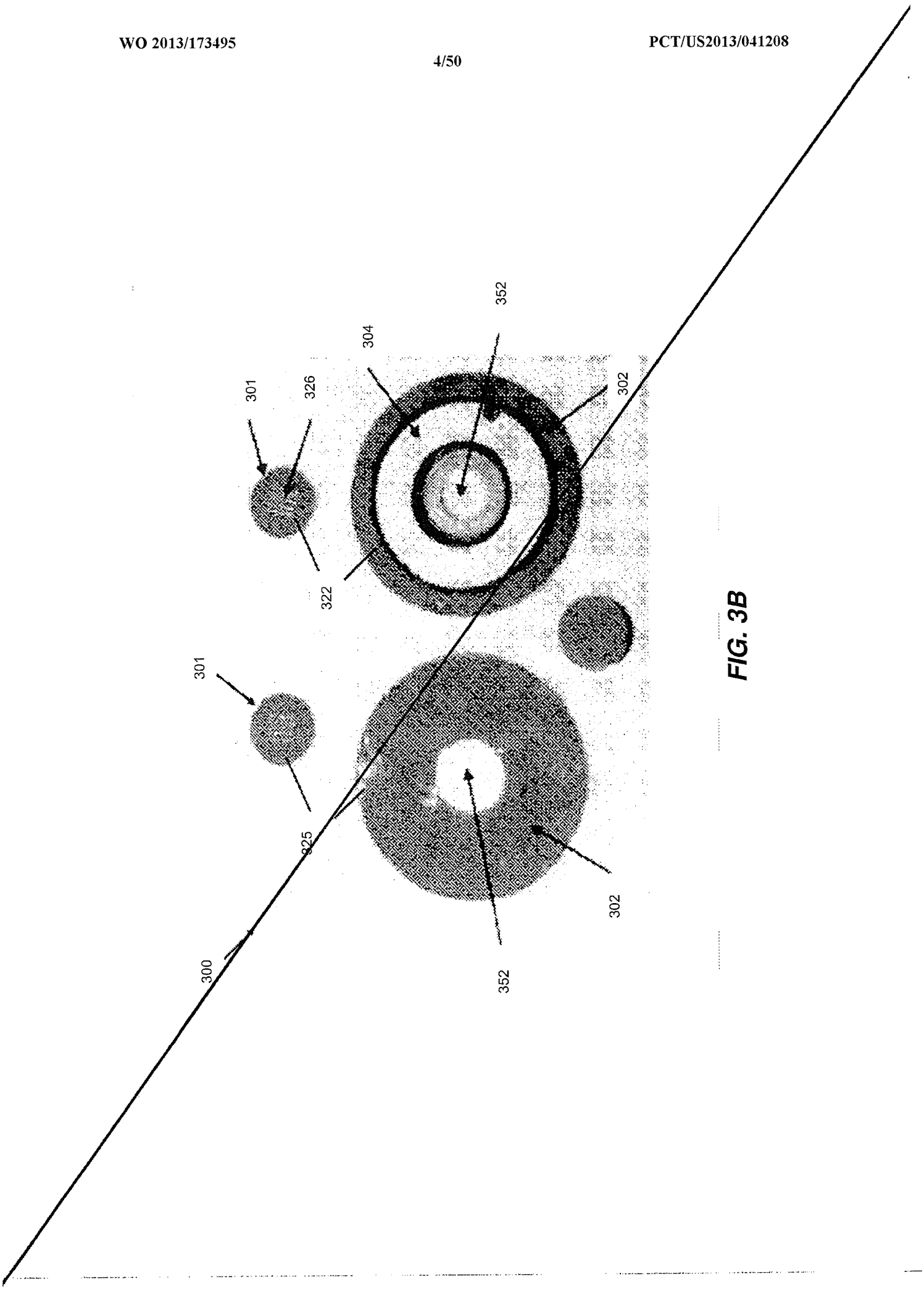

FIG. 3B

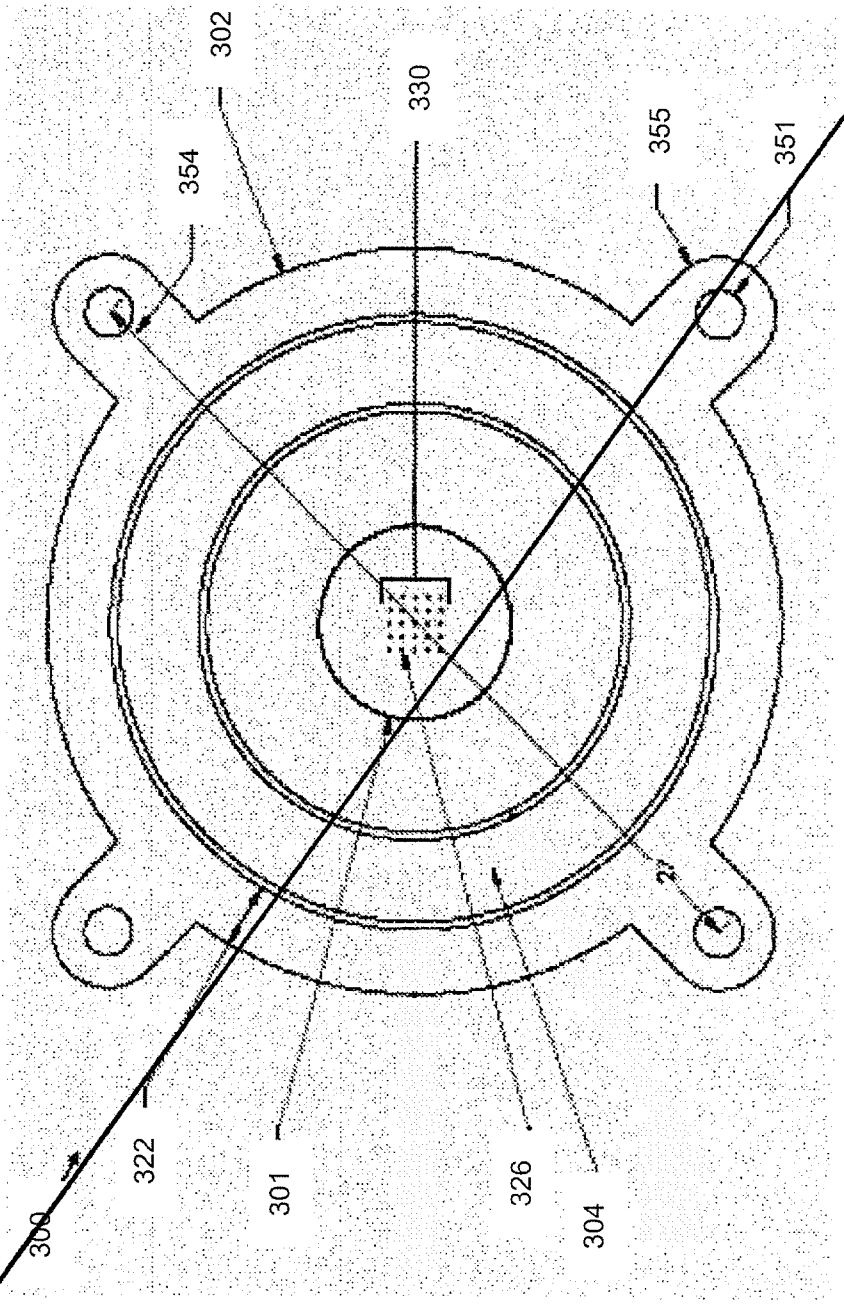

FIG. 3C

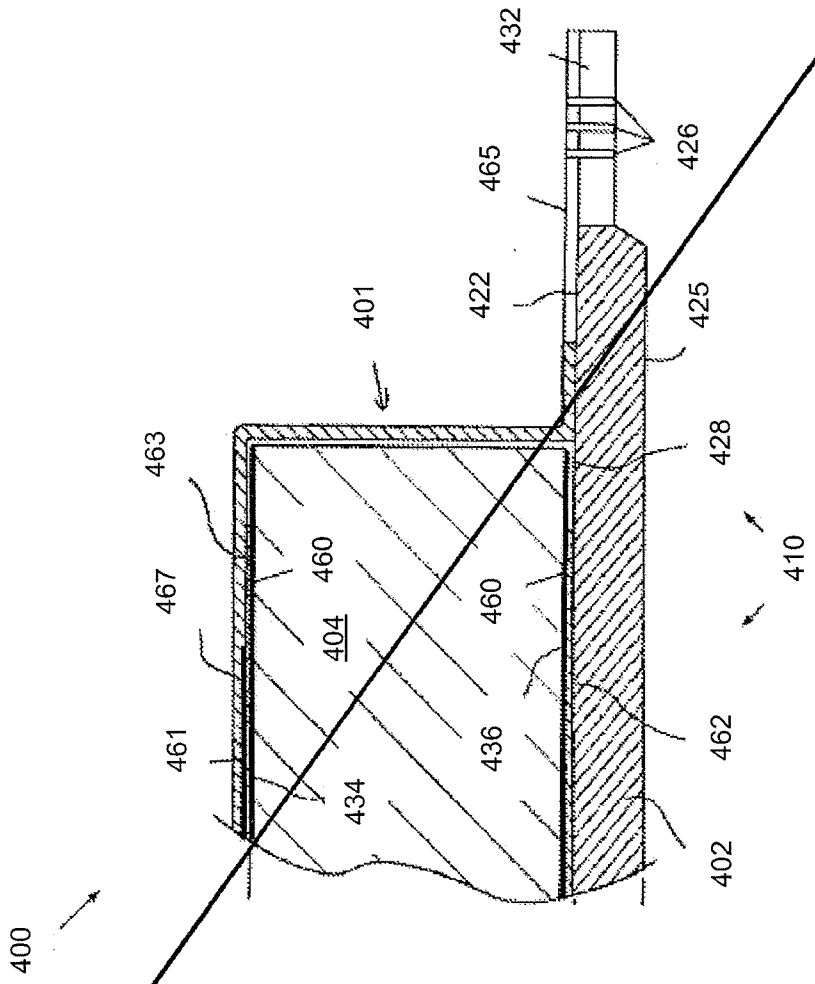
400
401
404
410
420
422
425
426
428
432
434
436
460
461
462
463
465
467
402

FIG. 4

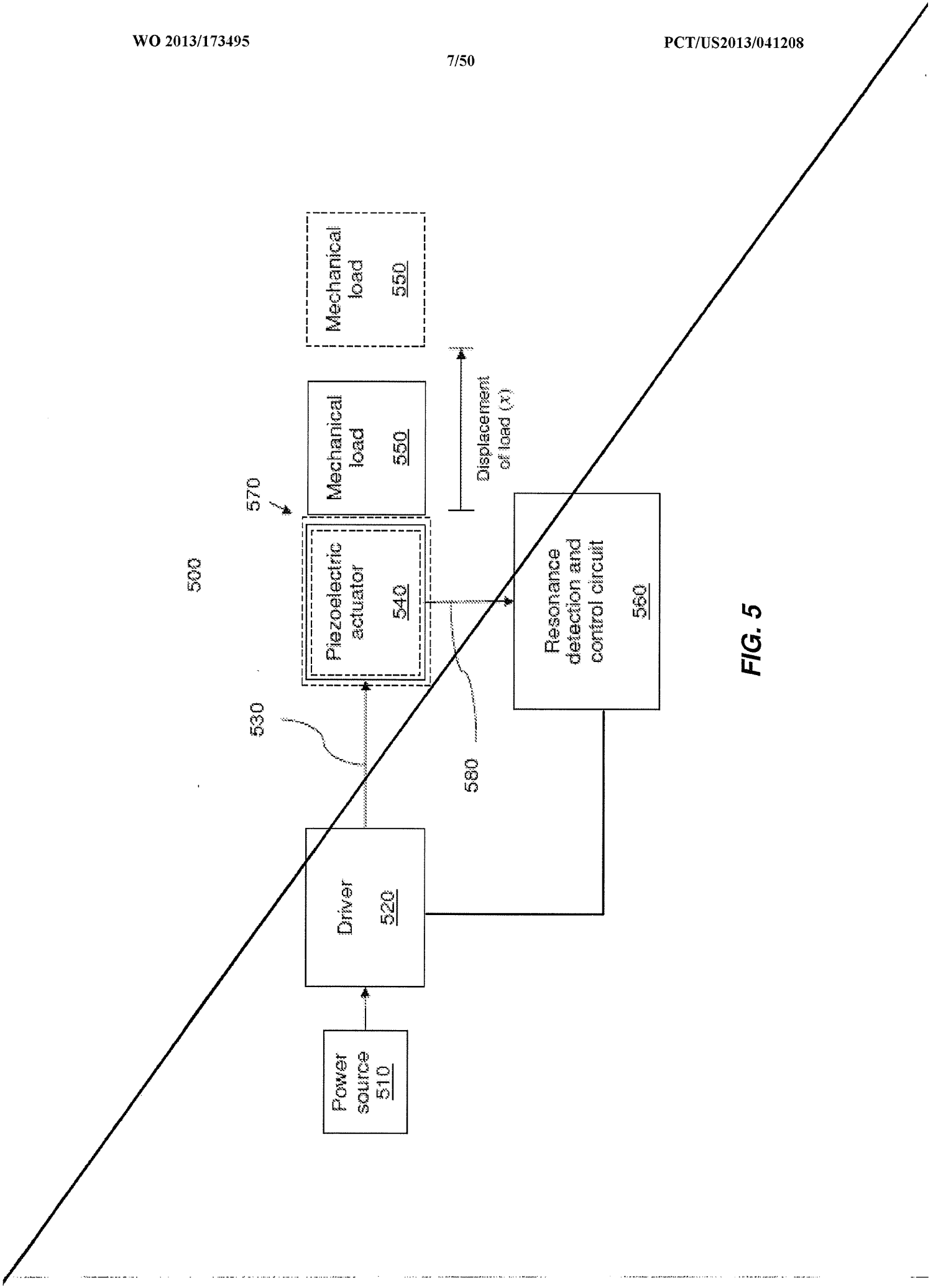
500
570
530
580
Power source 510
Driver 520
Piezoelectric actuator 540
Mechanical load 550
Mechanical load 550
Displacement of load (x)
Resonance detection and control circuit 560

FIG. 5

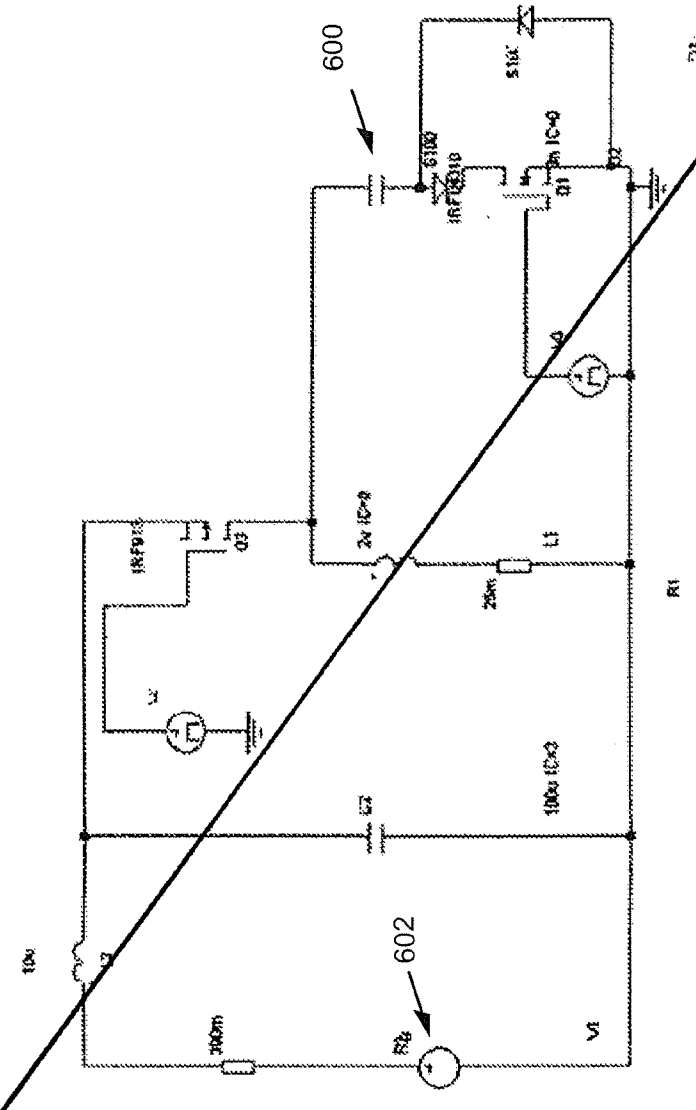

FIG. 6

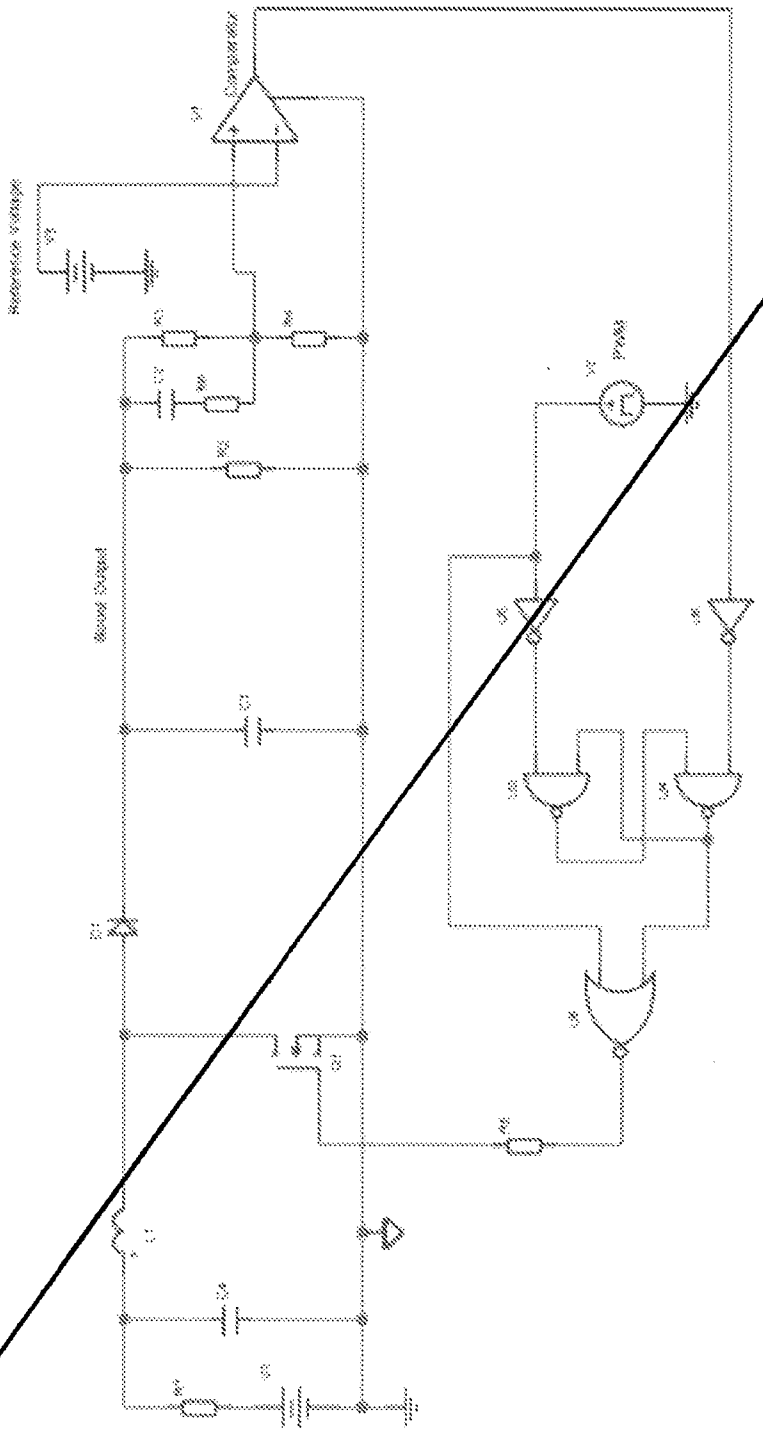

FIG. 7

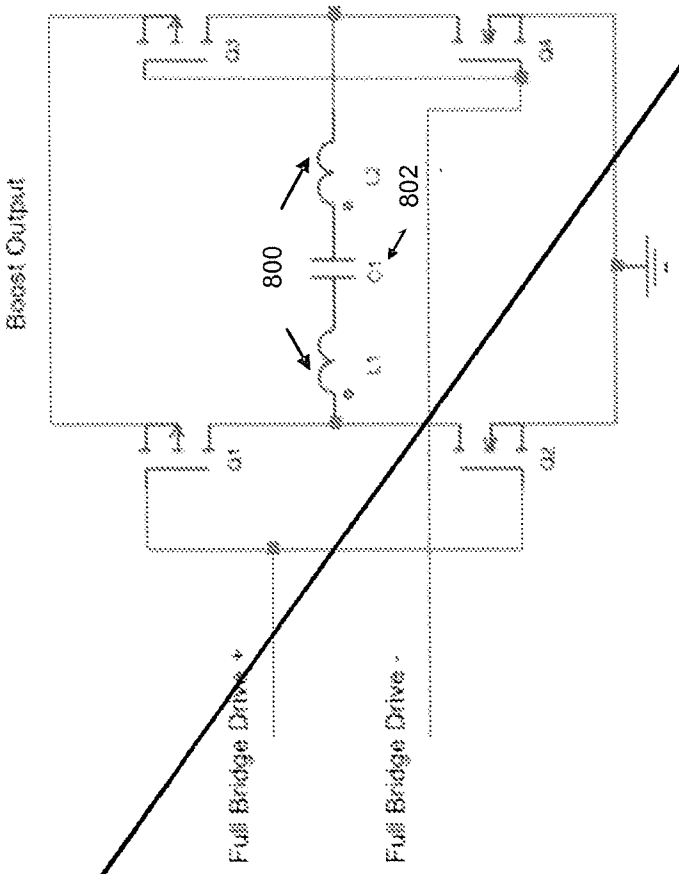

FIG. 8

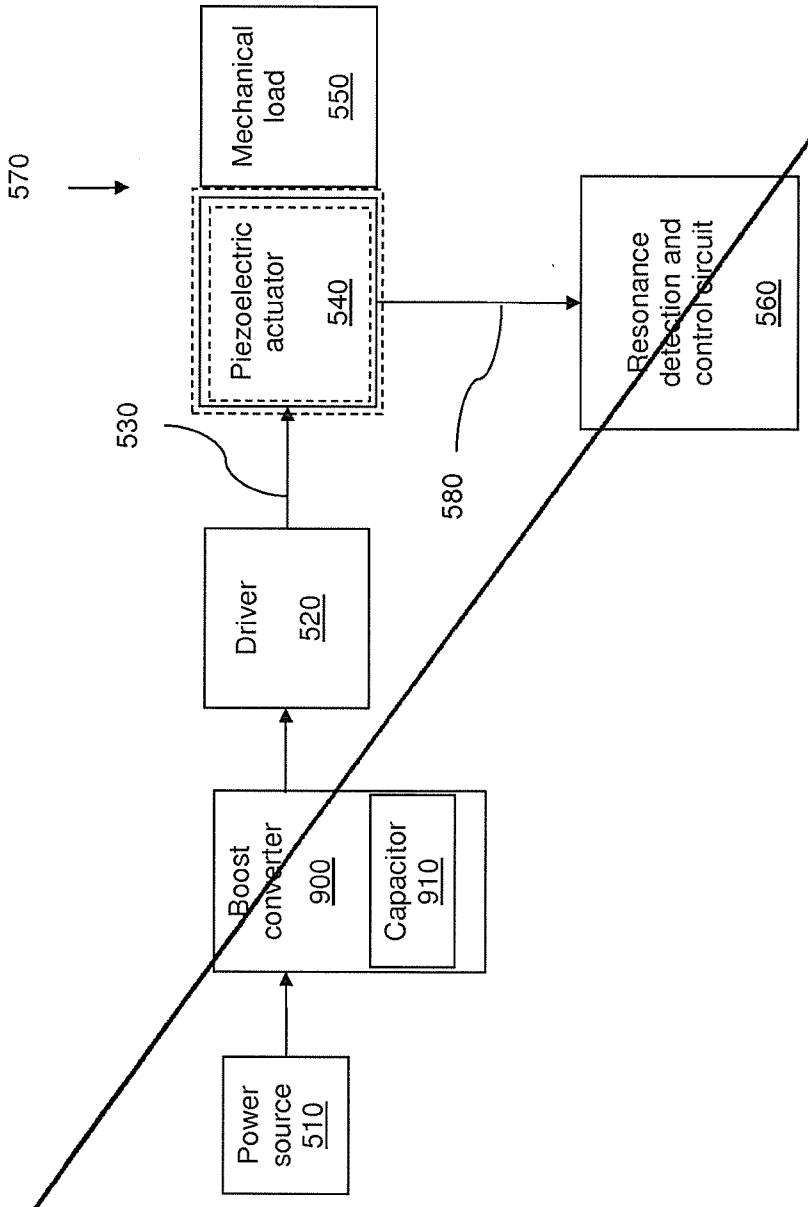
Power source 510
Boost converter 900
Capacitor 910
Driver 520
530
Piezoelectric actuator 540
Mechanical load 550
570
580
Resonance detection and control circuit 560

FIG. 9

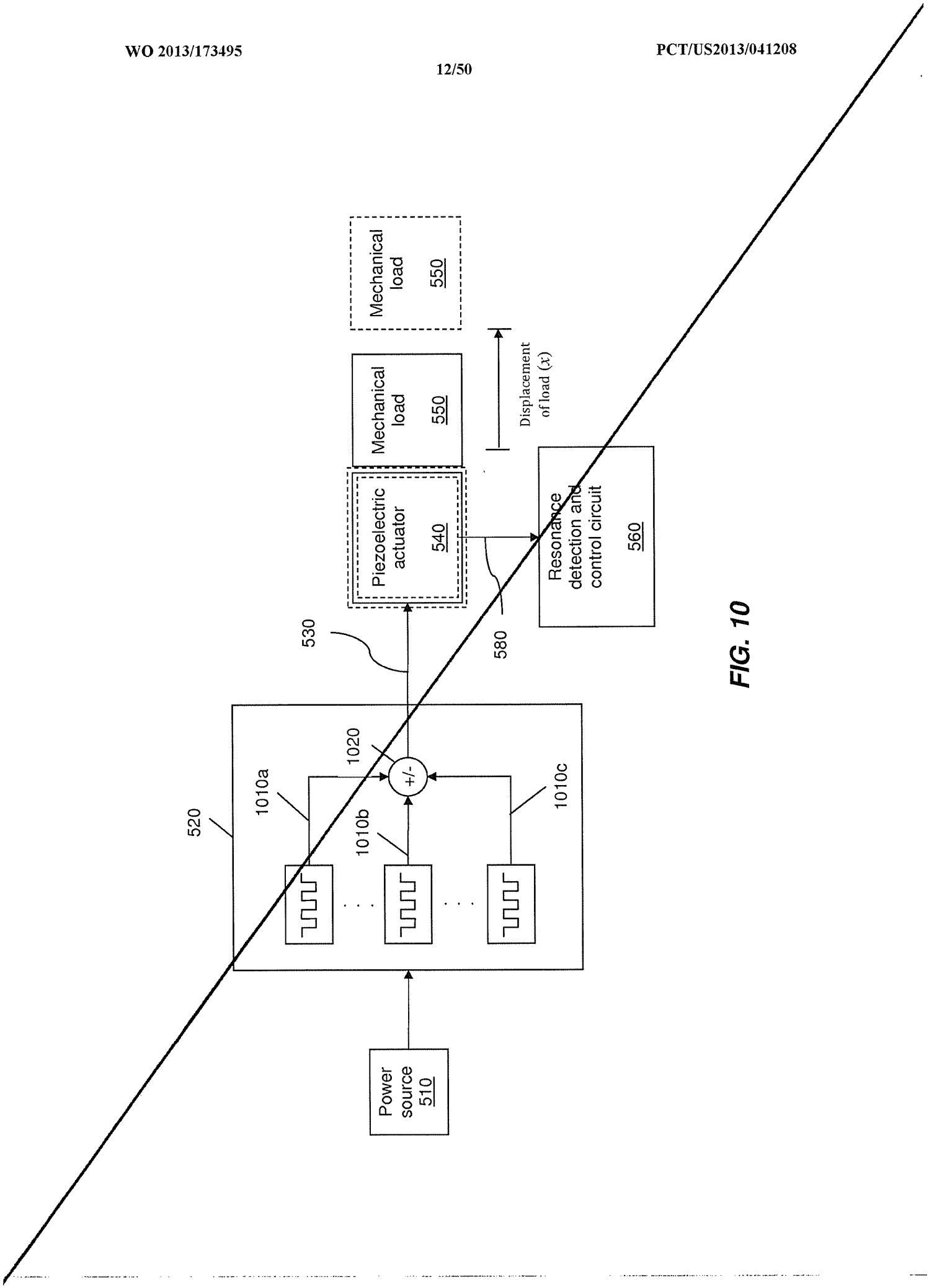
Power source 510
520
1010a
1010b
1010c
1020
+/-
530
Piezoelectric actuator 540
Mechanical load 550
Mechanical load 550
Mechanical load 550
Displacement of load (x)
580
Resonance detection and control circuit 560

FIG. 10

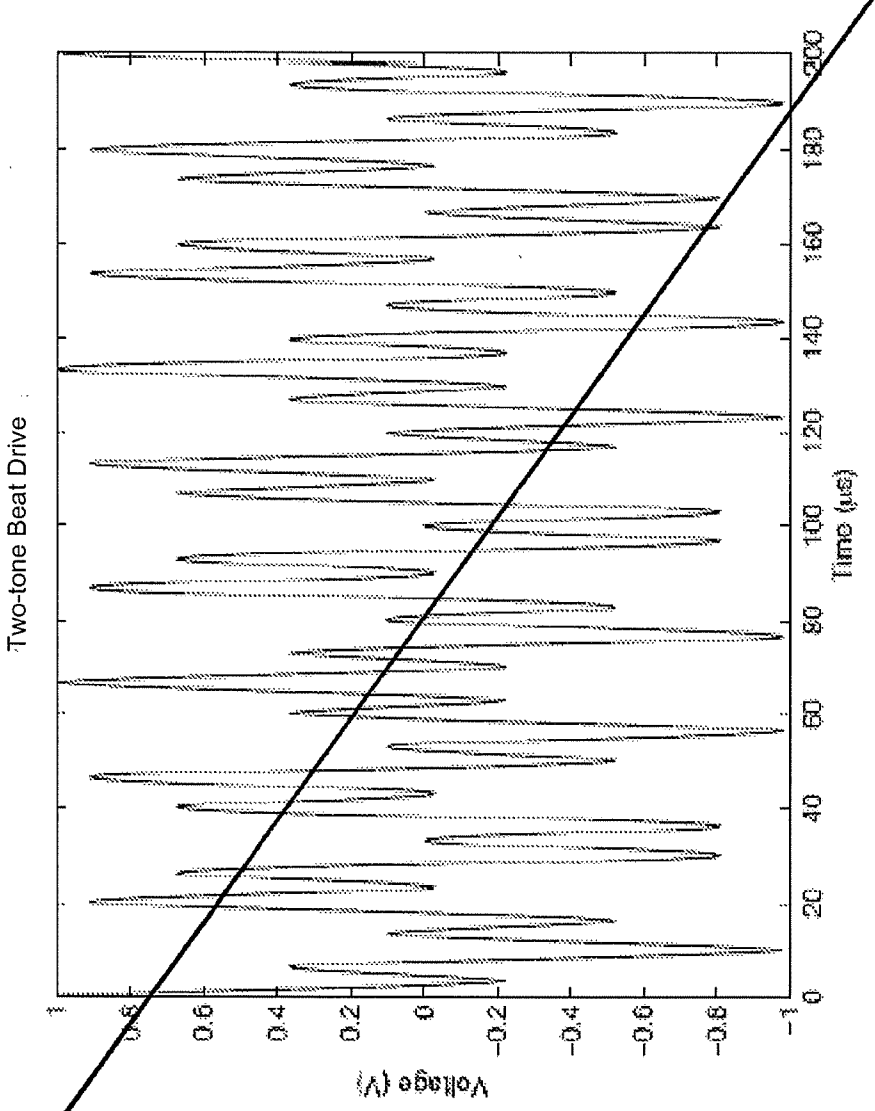
Two-tone Beat Drive
Voltage (V)
Time (µs)
1
0.8
0.6
0.4
0.2
0
-0.2
-0.4
-0.6
-0.8
-1
0
20
40
60
80
100
120
140
160
180
200

FIG. 11

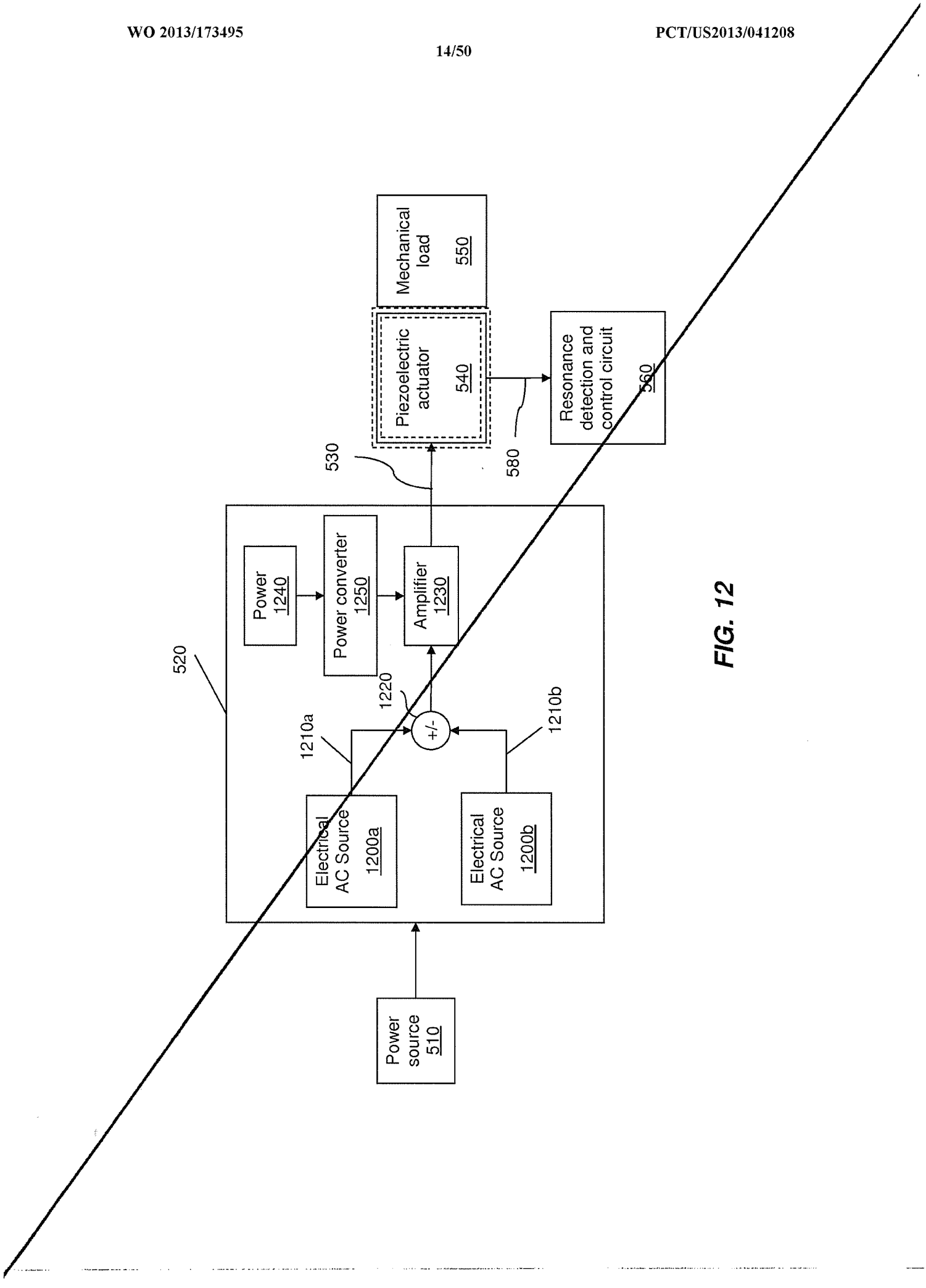
Mechanical load 550
Piezoelectric actuator 540
Resonance detection and control circuit 560
530
580
520
Power 1240
Power converter 1250
Amplifier 1230
1220
+/-
1210a
1210b
Electrical AC Source 1200a
Electrical AC Source 1200b
Power source 510

FIG. 12

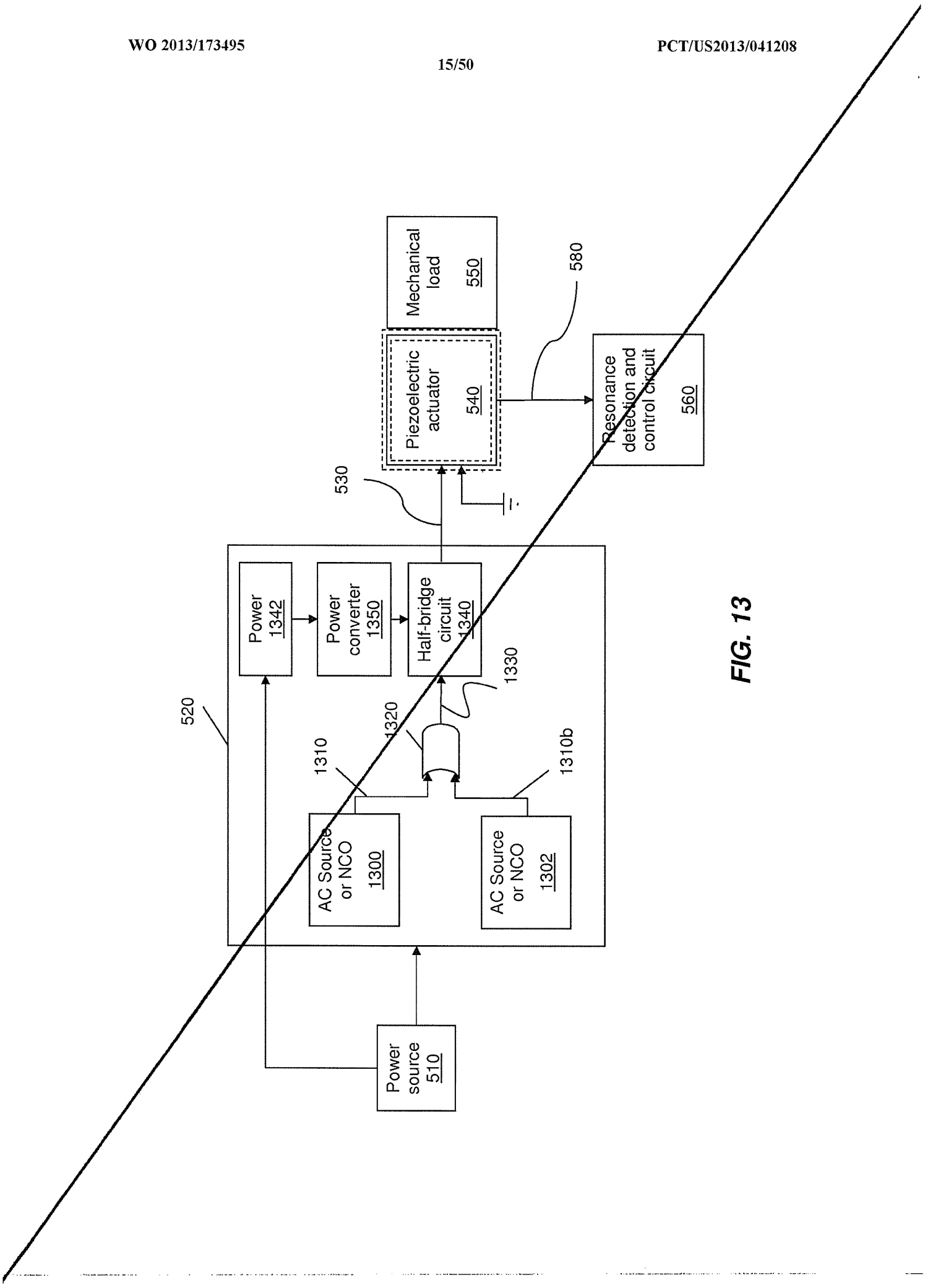
Mechanical load 550
580
Piezoelectric actuator 540
Resonance detection and control circuit 560
530
Power 1342
Power converter 1350
Half-bridge circuit 1340
1330
520
1320
1310
1310b
AC Source or NCO 1300
AC Source or NCO 1302
Power source 510

FIG. 13

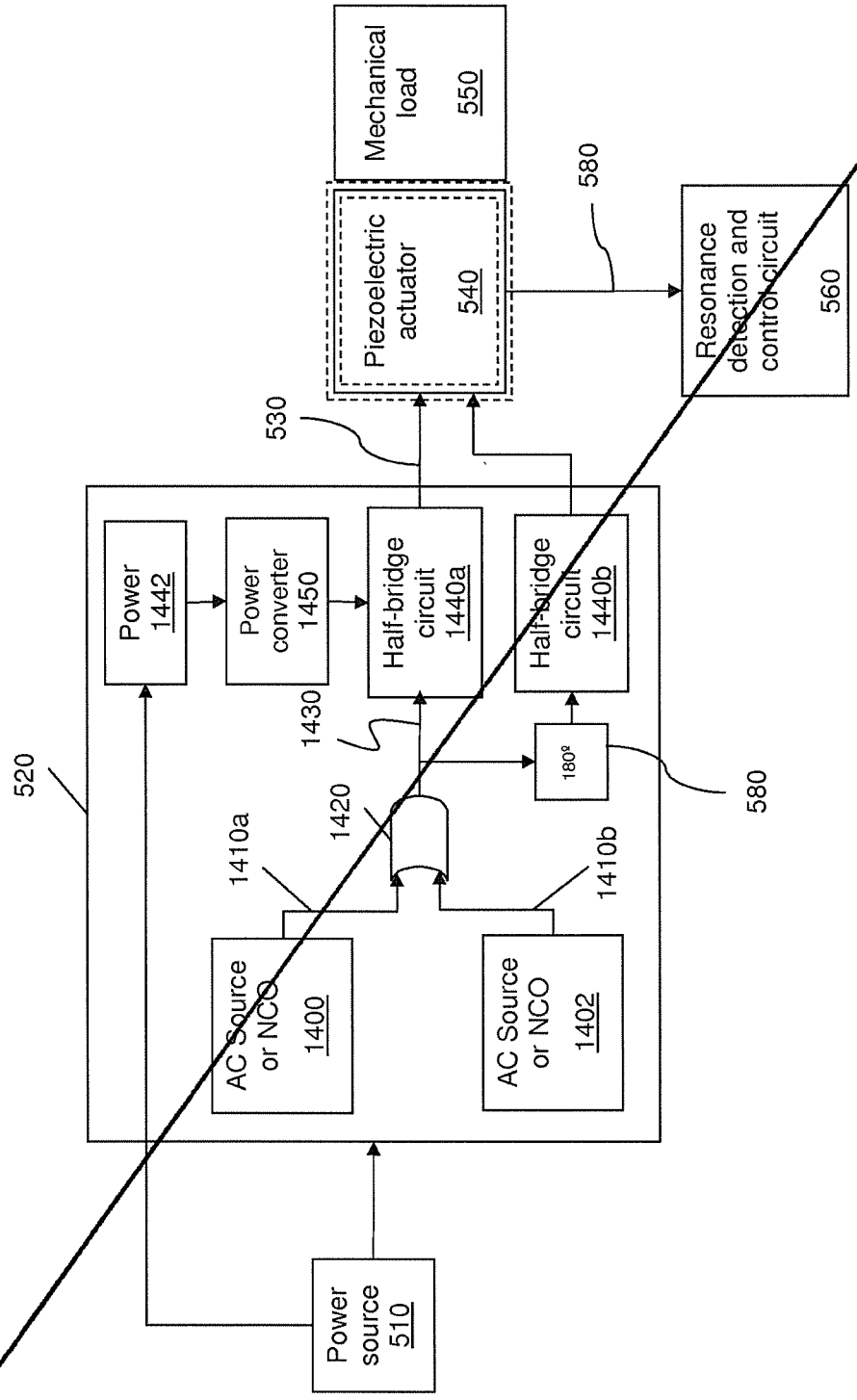
Mechanical load 550
580
Piezoelectric actuator 540
Resonance detection and control circuit 560
530
Power 1442
Power converter 1450
Half-bridge circuit 1440a
Half-bridge circuit 1440b
1430
180°
580
520
1420
1410a
1410b
AC Source or NCO 1400
AC Source or NCO 1402
Power source 510

FIG. 14

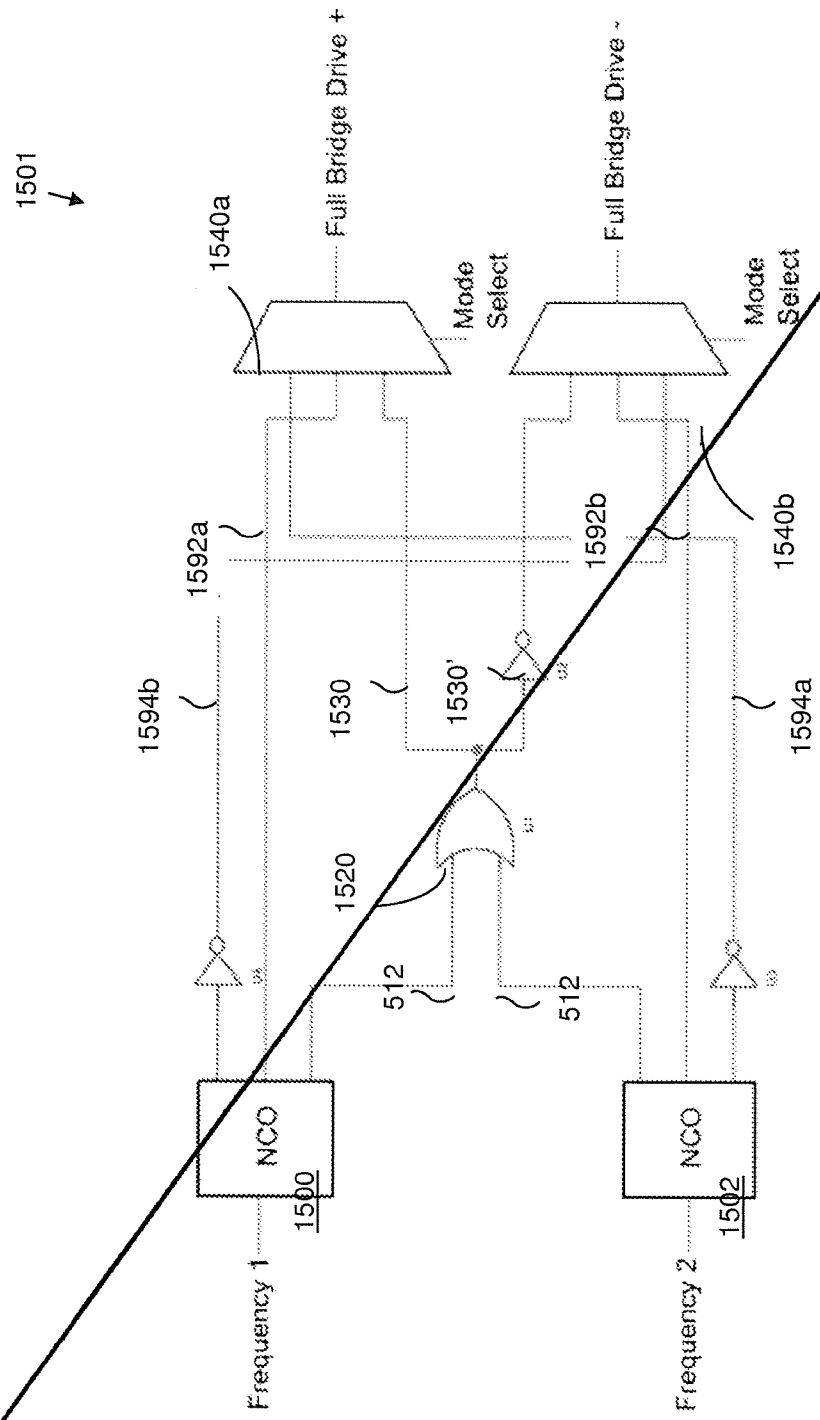
1501
1540a
Full Bridge Drive +
Mode Select
Full Bridge Drive -
Mode Select
1592a
1592b
1540b
1594b
1530
1530'
1594a
1520
512
512
NCO
1500
NCO
1502
Frequency 1
Frequency 2

FIG. 15

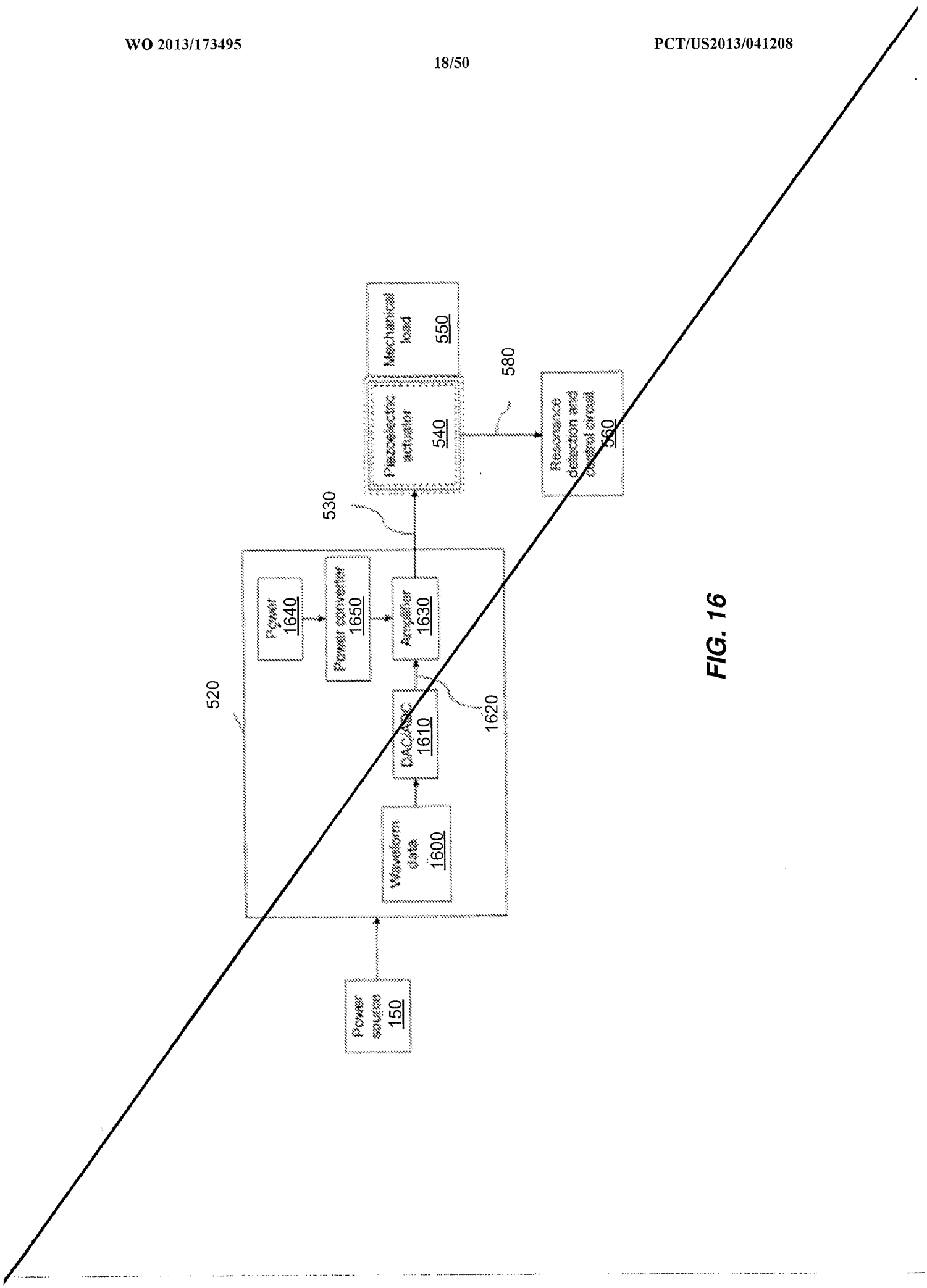
Power source 150
520
Waveform data 1600
DAC/ASIC 1610
1620
Power 1640
Power conversion 1650
Amplifier 1630
530
Piezoelectric actuator 540
Mechanical load 550
580
Response detection and control circuit 560

FIG. 16

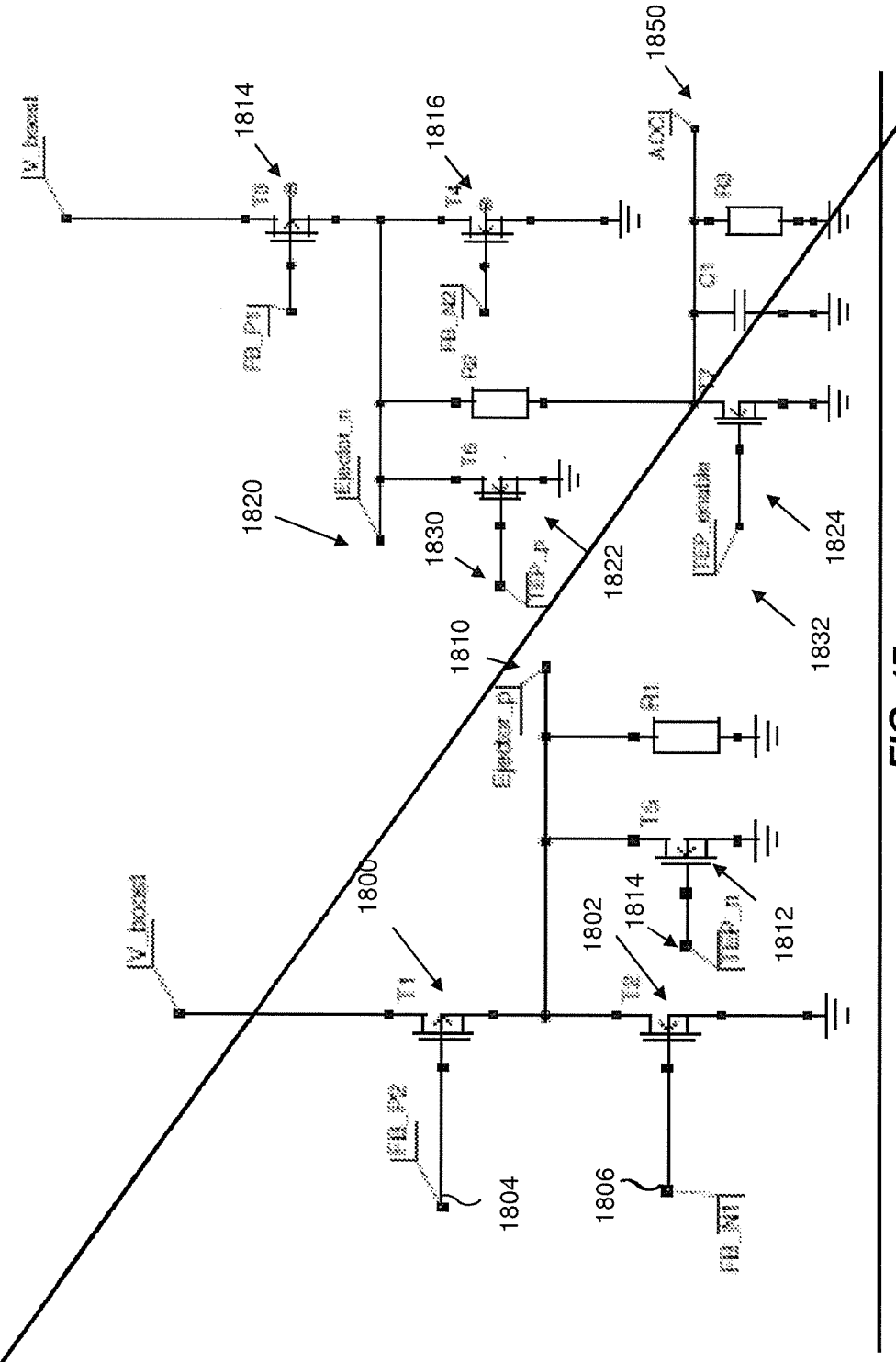
1800
1802
1804
1806
1810
1812
1814
1816
1820
1822
1824
1830
1832
1850

FIG. 17

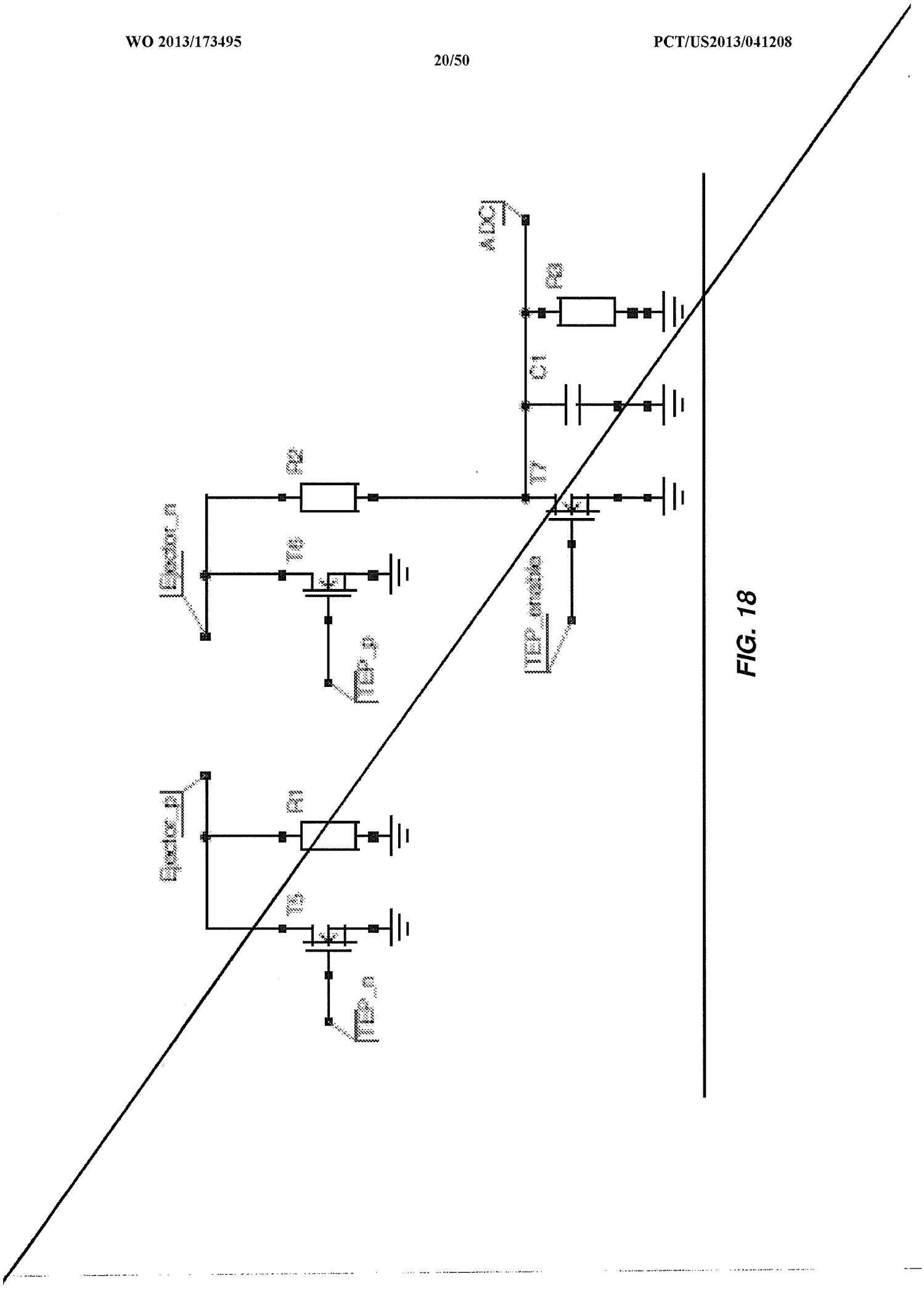

FIG. 18

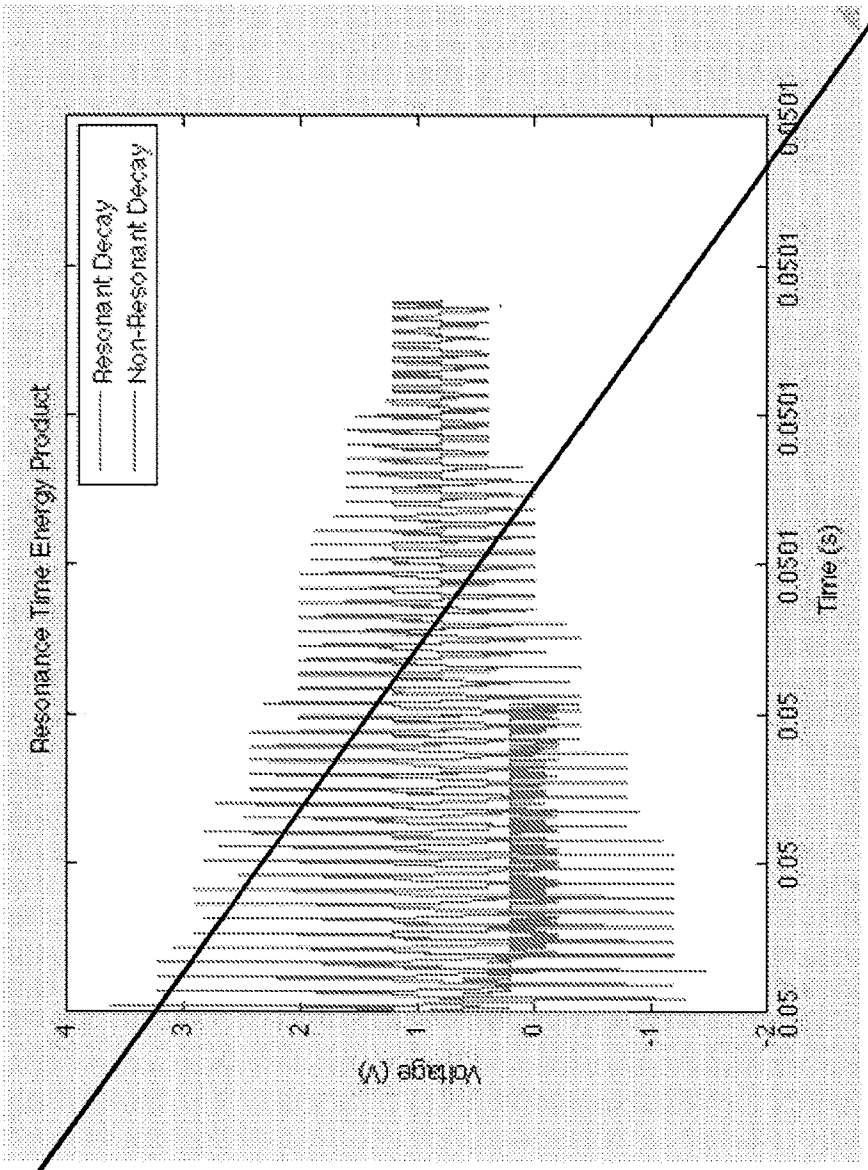
Resonance Time Energy Product
Resonant Decay
Non-Resonant Decay
Voltage (V)
Time (s)
4
3
2
1
0
-1
-2
0.05
0.0501

FIG. 19

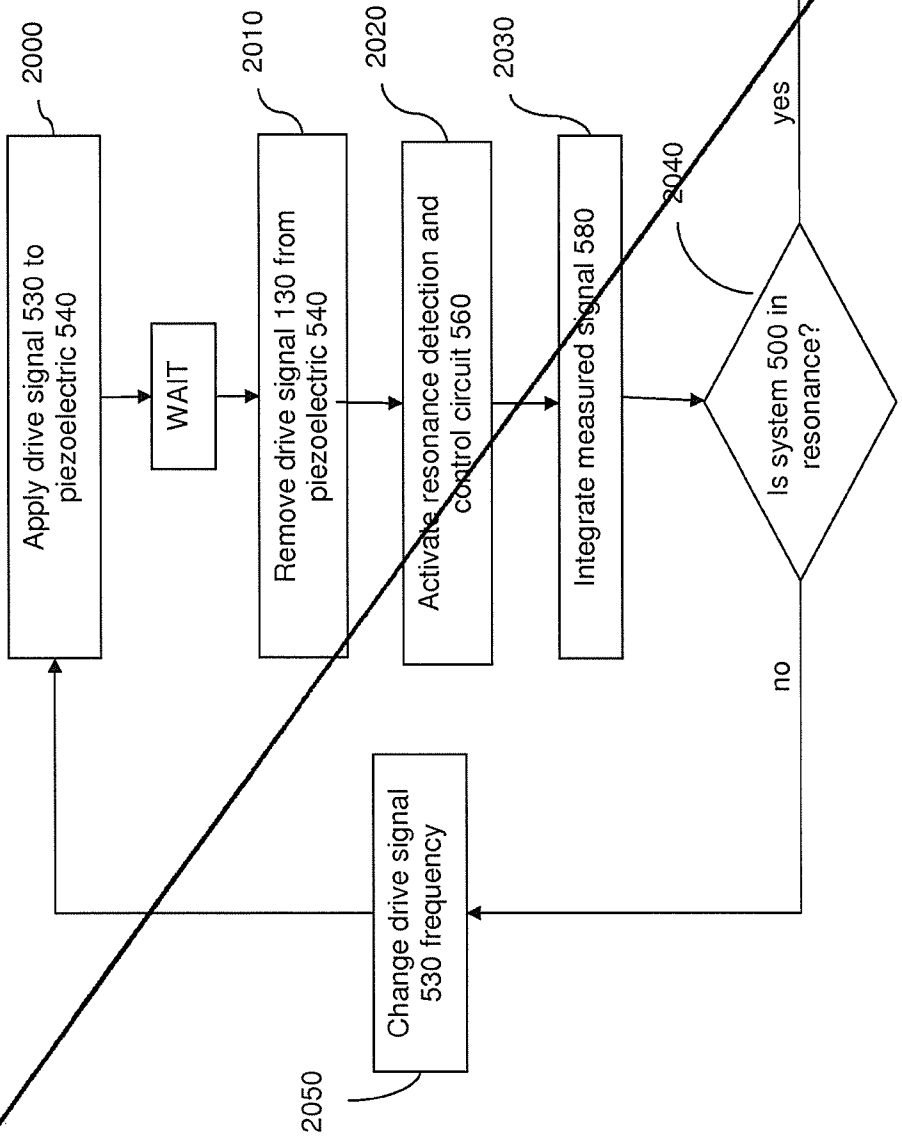
2000
Apply drive signal 530 to piezoelectric 540
WAIT
2010
Remove drive signal 130 from piezoelectric 540
2020
Activate resonance detection and control circuit 560
2030
Integrate measured signal 580
2040
Is system 500 in resonance?
yes
STOP
no
Change drive signal 530 frequency
2050

FIG. 20

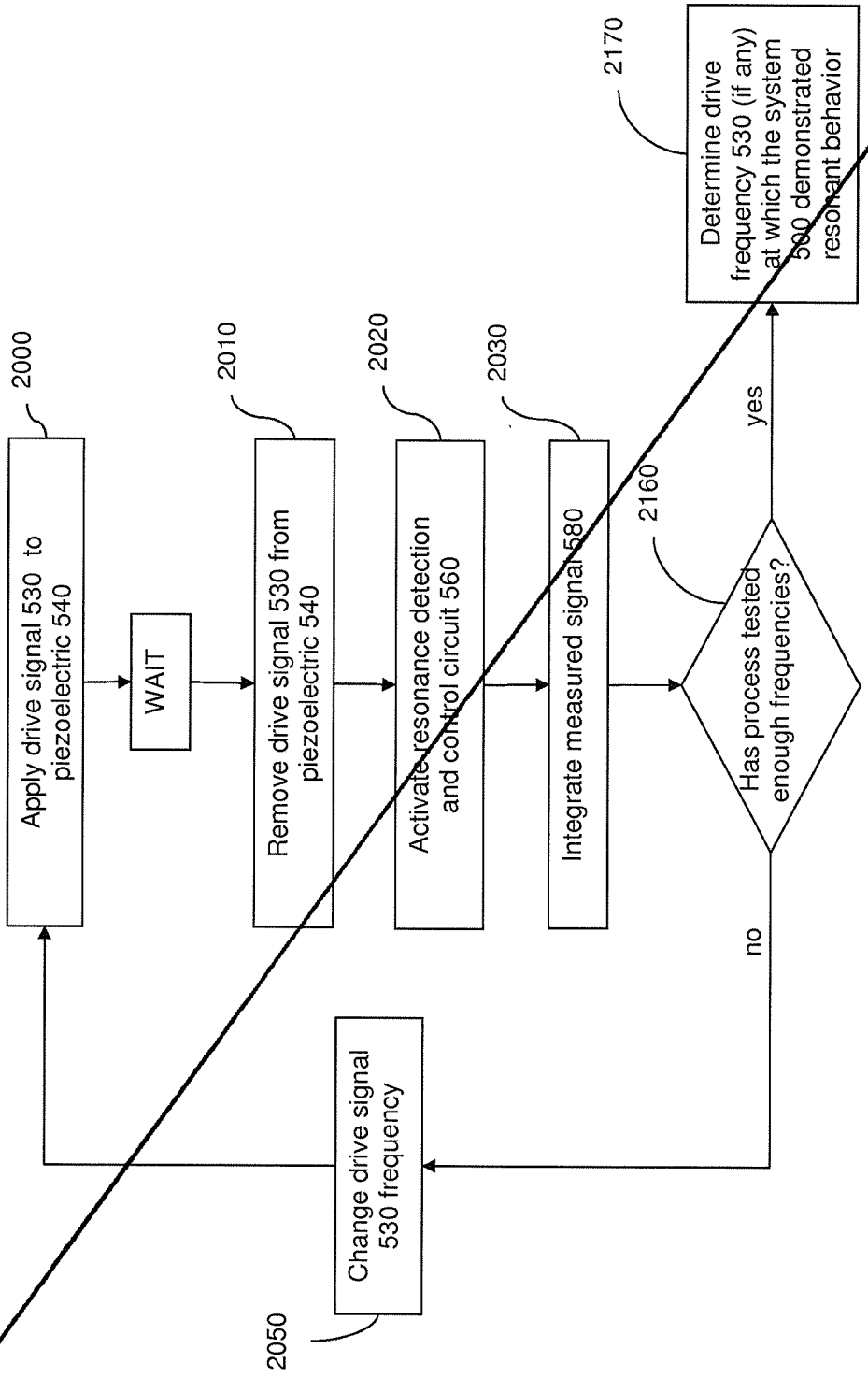
2000
Apply drive signal 530 to piezoelectric 540
WAIT
2010
Remove drive signal 530 from piezoelectric 540
2020
Activate resonance detection and control circuit 560
2030
Integrate measured signal 580
2160
Has process tested enough frequencies?
yes
2170
Determine drive frequency 530 (if any) at which the system 500 demonstrated resonant behavior
no
2050
Change drive signal 530 frequency

FIG. 21

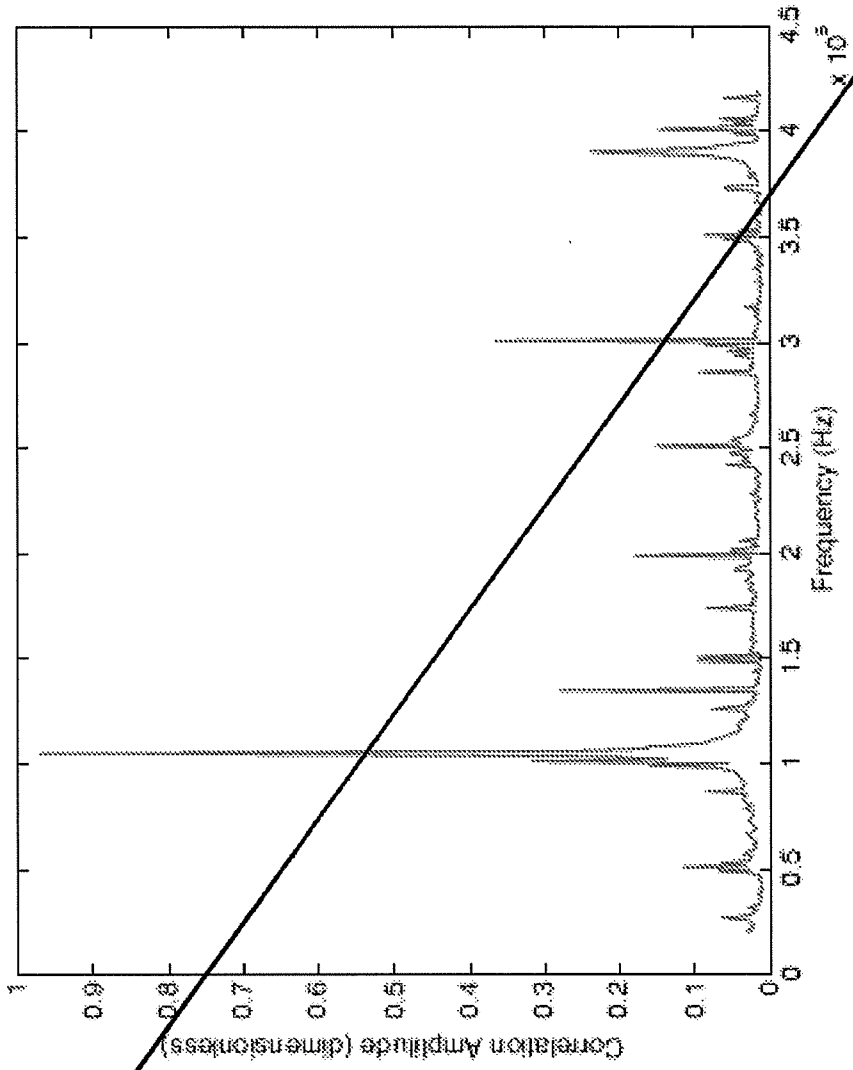
Correlation Amplitude (dimensionless)
Frequency (Hz)
x 10^3
0
0.1
0.2
0.3
0.4
0.5
0.6
0.7
0.8
0.9
1
0.5
1.5
2
2.5
3
3.5
4
4.5

FIG. 22

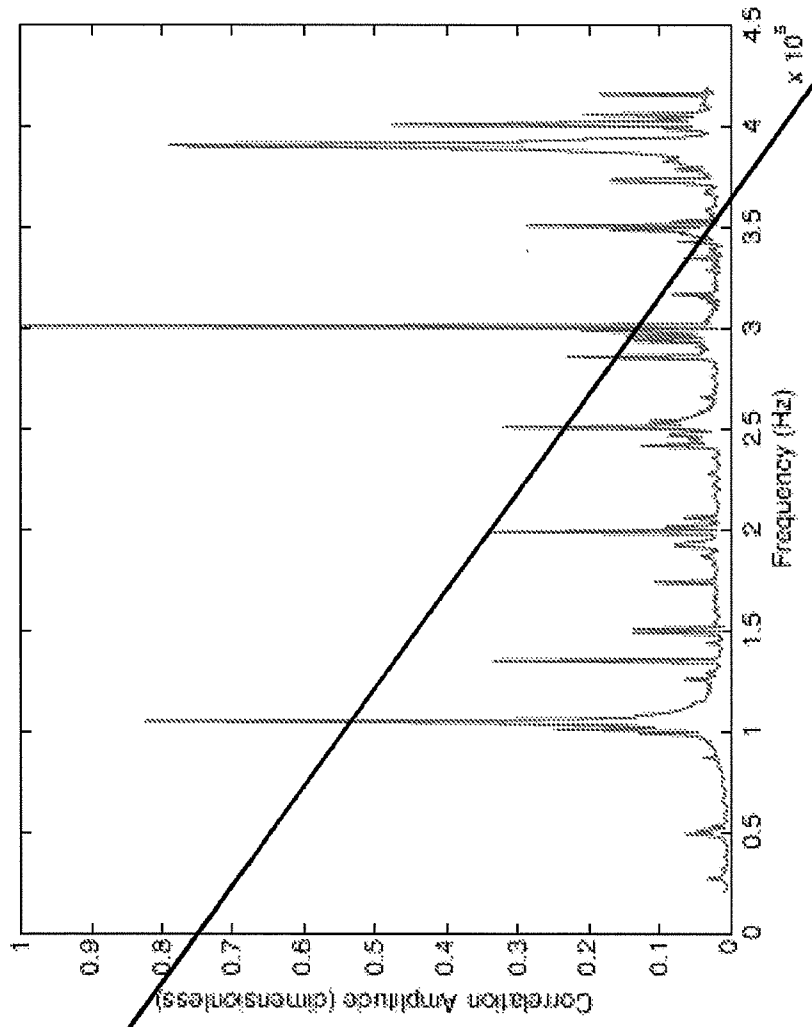
Correlation Amplitude (dimensionless)
0
0.1
0.2
0.3
0.4
0.5
0.6
0.7
0.8
0.9
1
0
0.5
1
1.5
2
2.5
3
3.5
4
4.5
x 10^3
Frequency (Hz)

FIG. 23

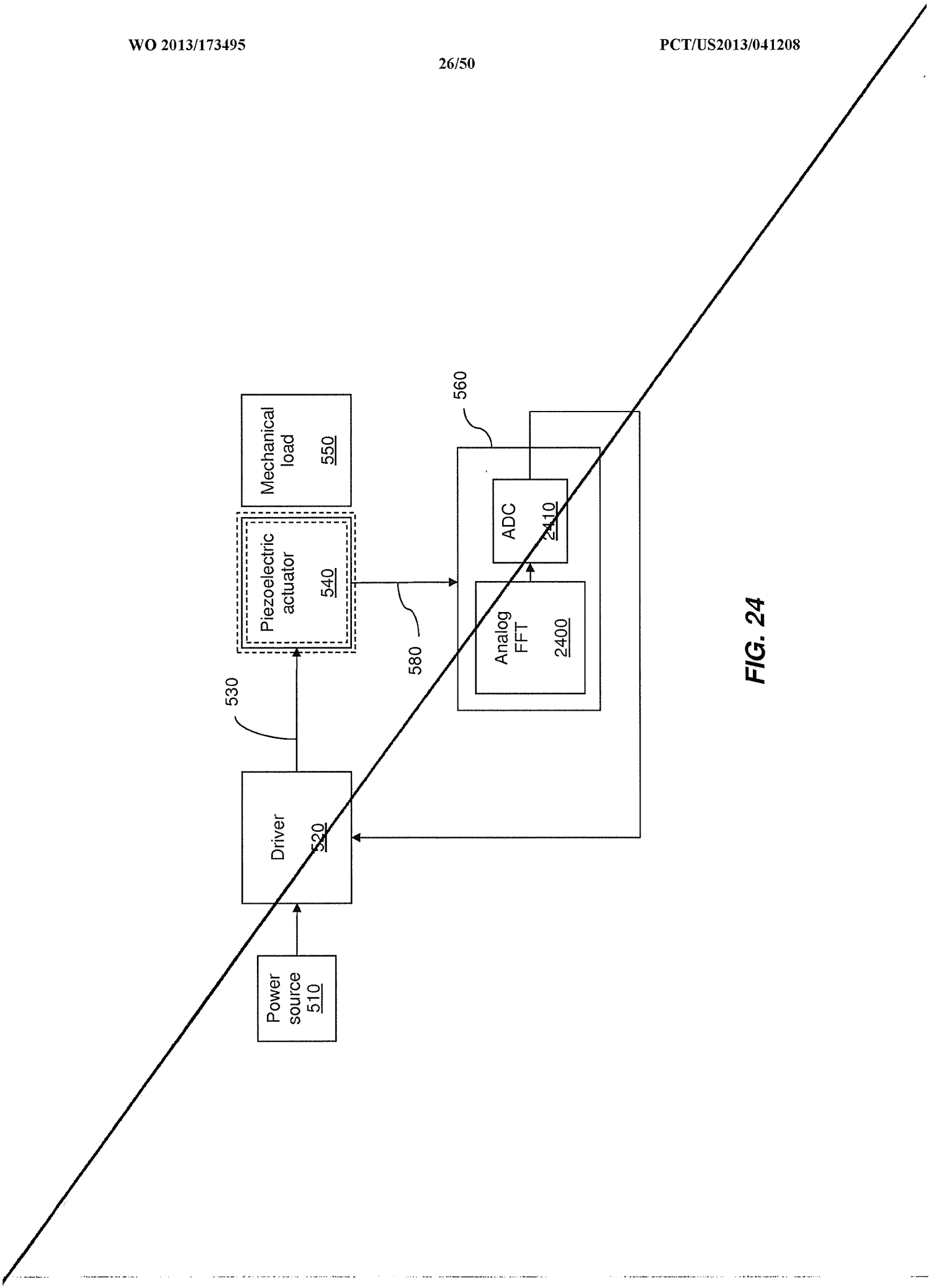
Power source 510
Driver 520
530
Piezoelectric actuator 540
Mechanical load 550
560
ADC 2410
Analog FFT 2400
580

FIG. 24

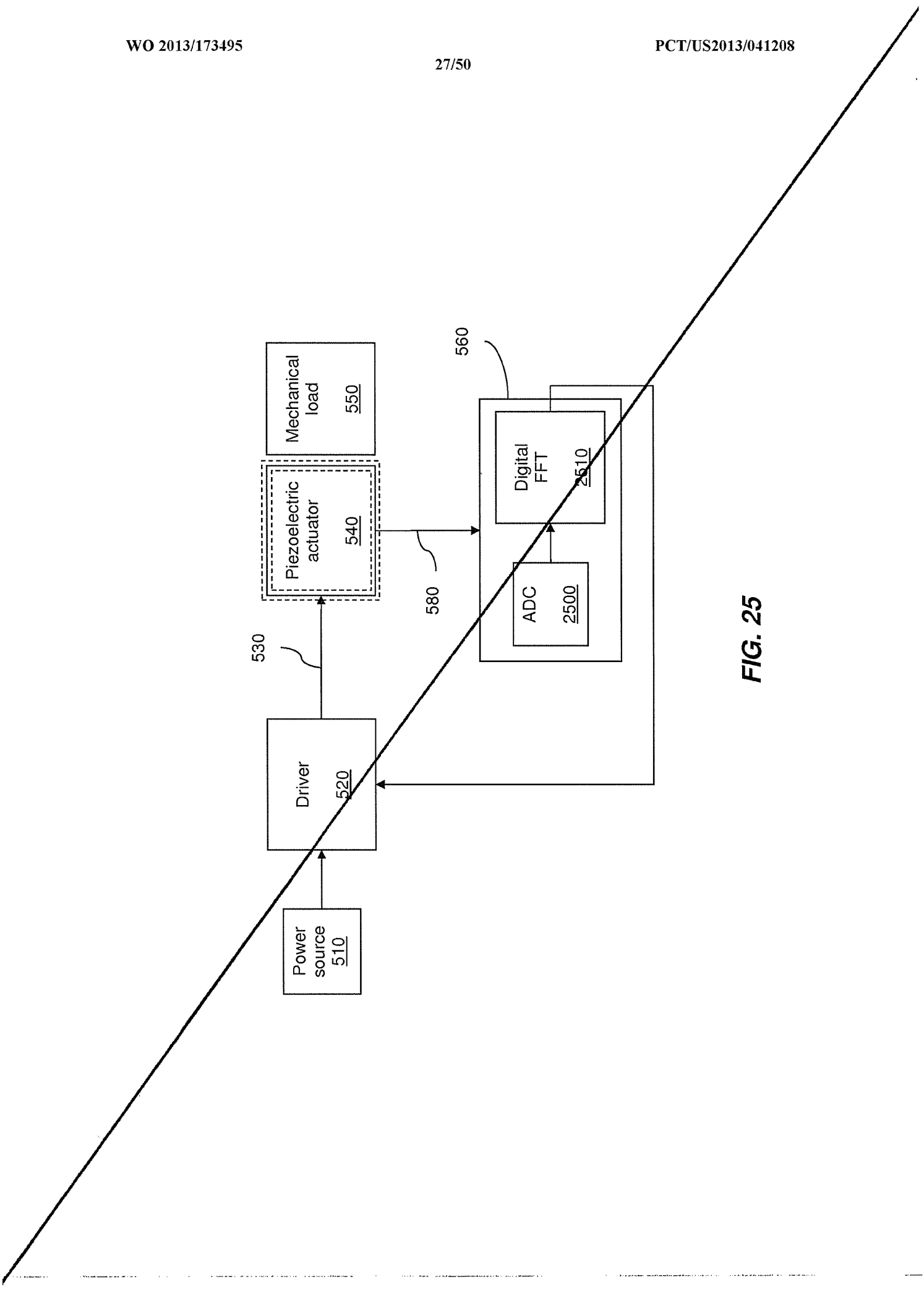
Power source 510
Driver 520
530
Piezoelectric actuator 540
Mechanical load 550
580
560
ADC 2500
Digital FFT 2510

FIG. 25

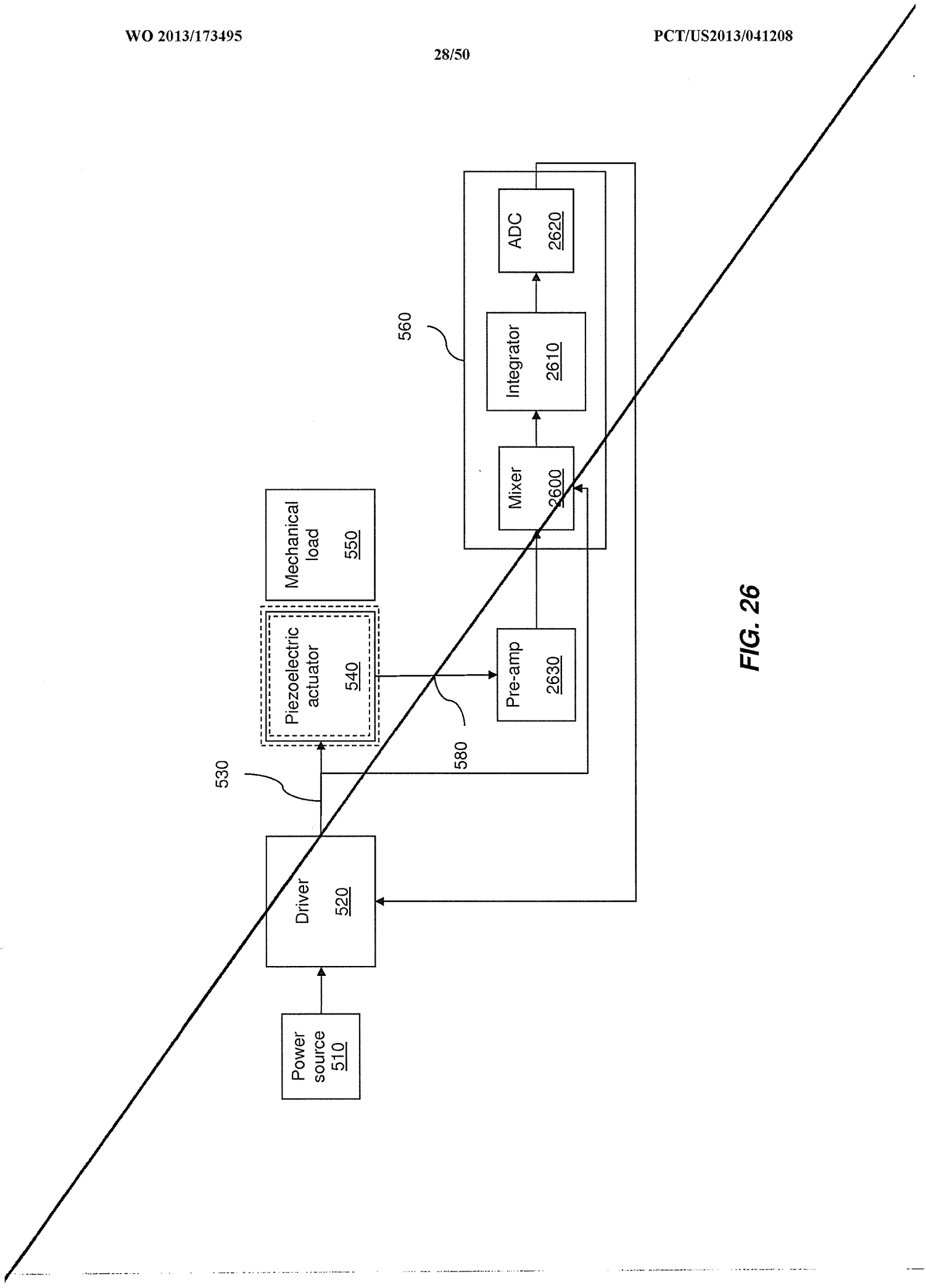
Power source 510
Driver 520
530
Piezoelectric actuator 540
Mechanical load 550
580
560
Mixer 2600
Integrator 2610
ADC 2620
Pre-amp 2630

FIG. 26

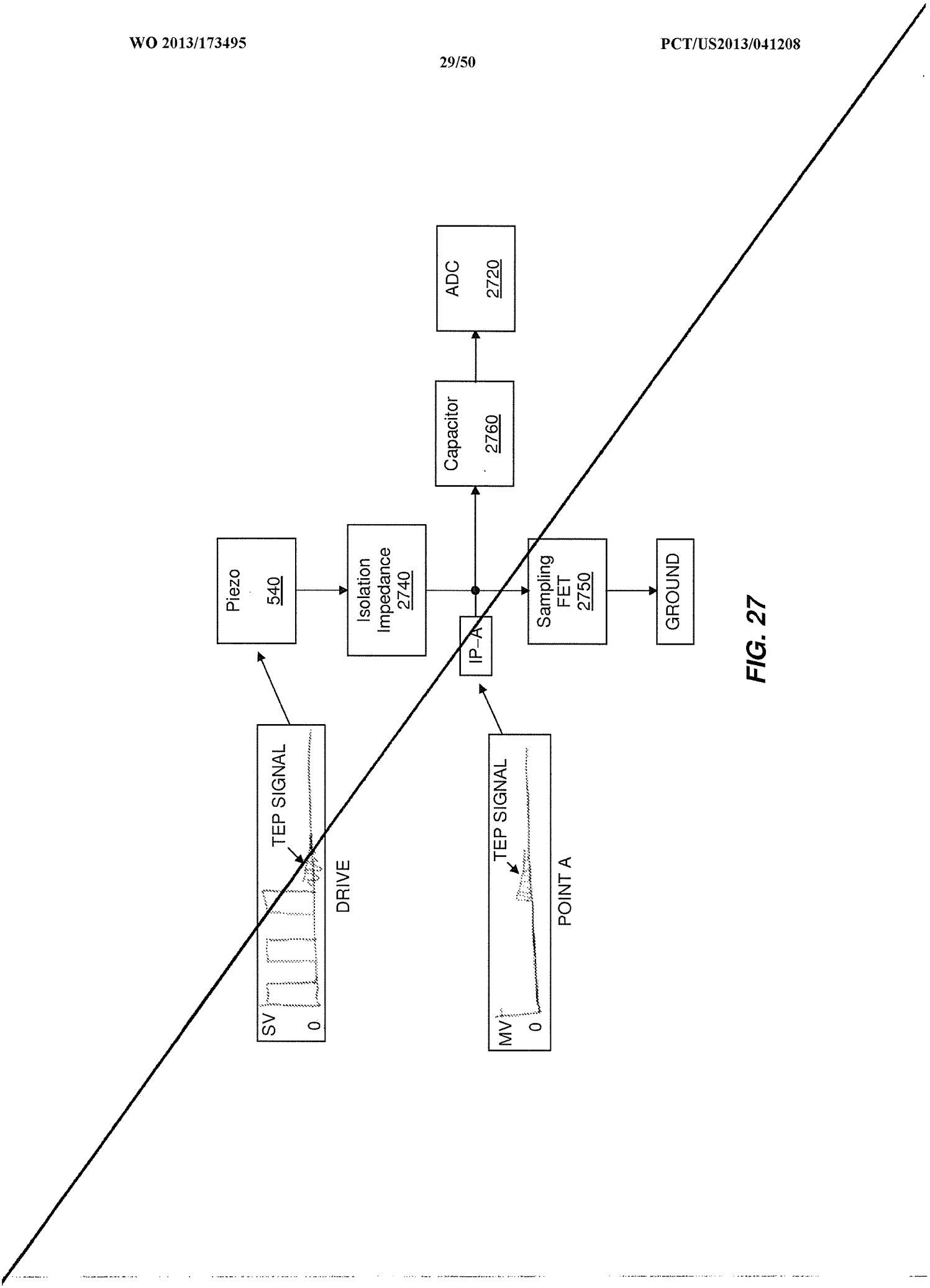
ADC
2720
Capacitor
2760
Piezo
540
Isolation
Impedance
2740
IP–A
Sampling
FET
2750
GROUND
TEP SIGNAL
SV
0
DRIVE
TEP SIGNAL
MV
0
POINT A

FIG. 27

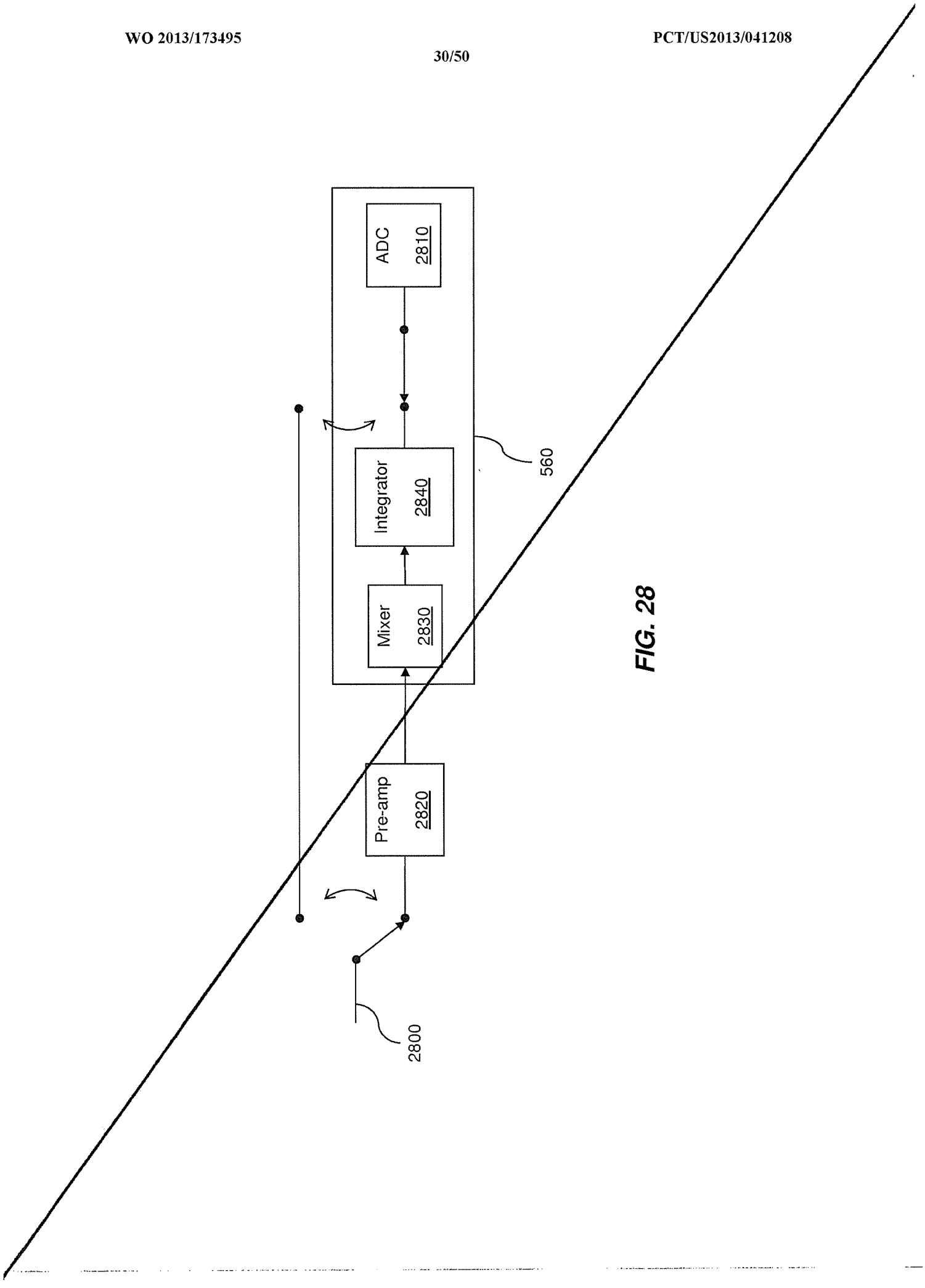

FIG. 28

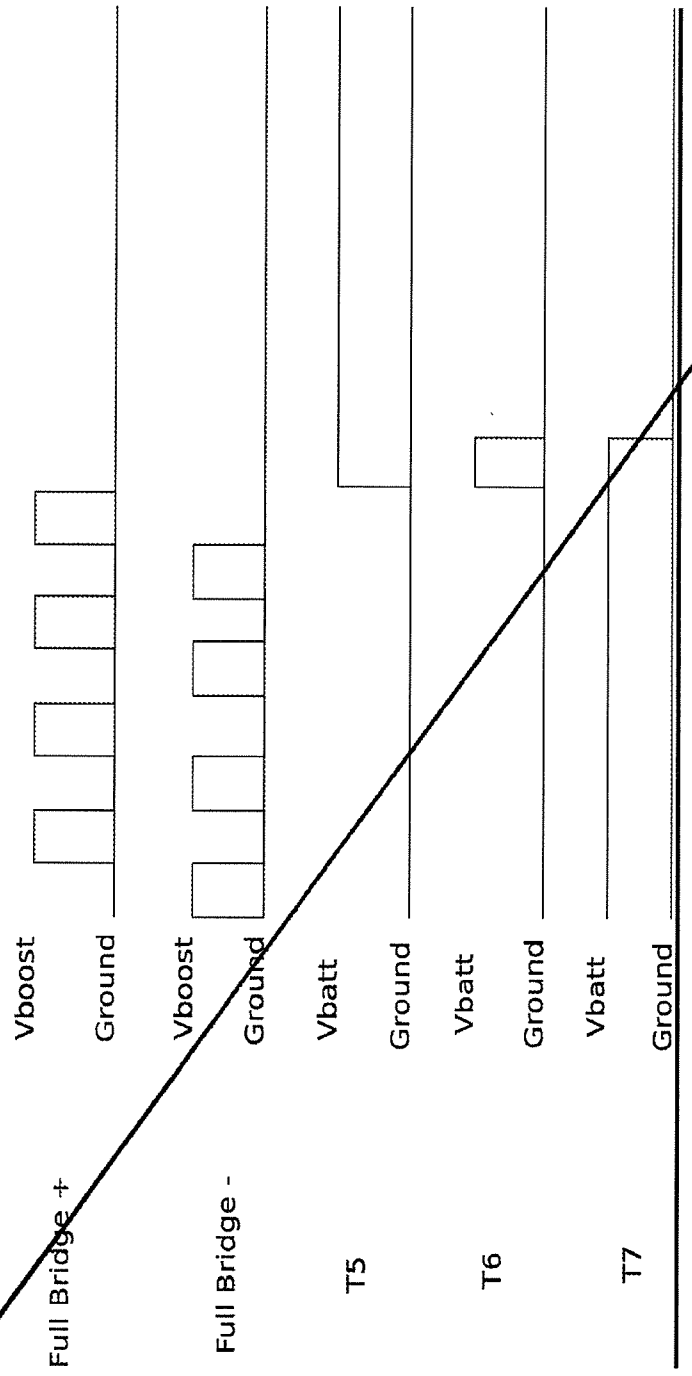
Full Bridge +
Vboost
Ground
Full Bridge -
Vboost
Ground
T5
Vbatt
Ground
T6
Vbatt
Ground
T7
Vbatt
Ground

FIG. 29

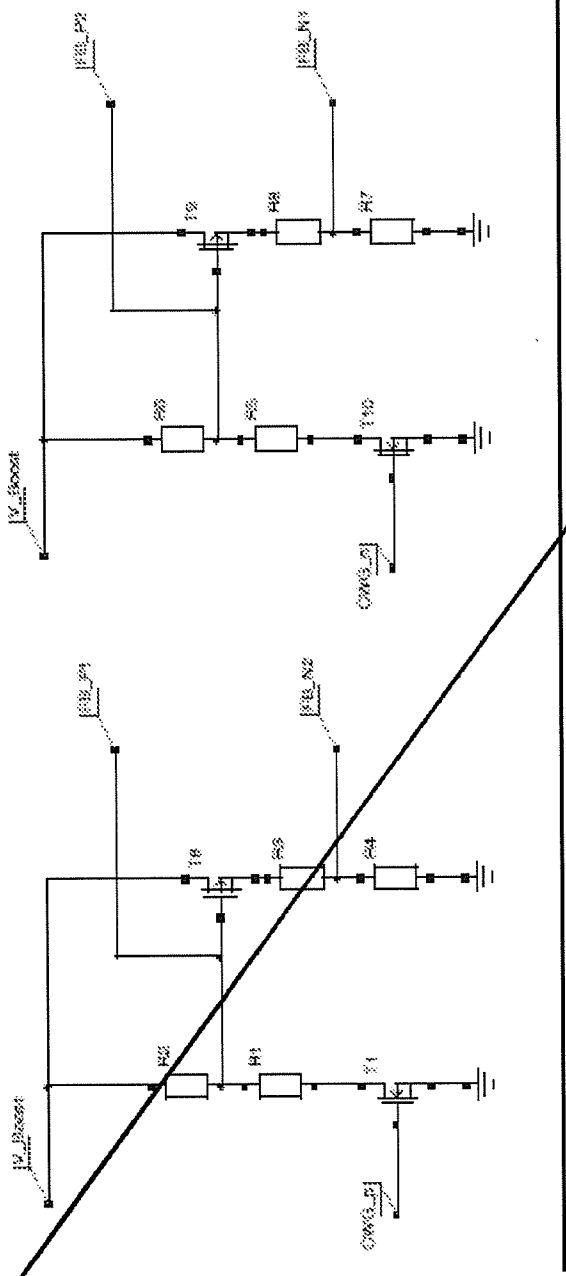

FIG. 30

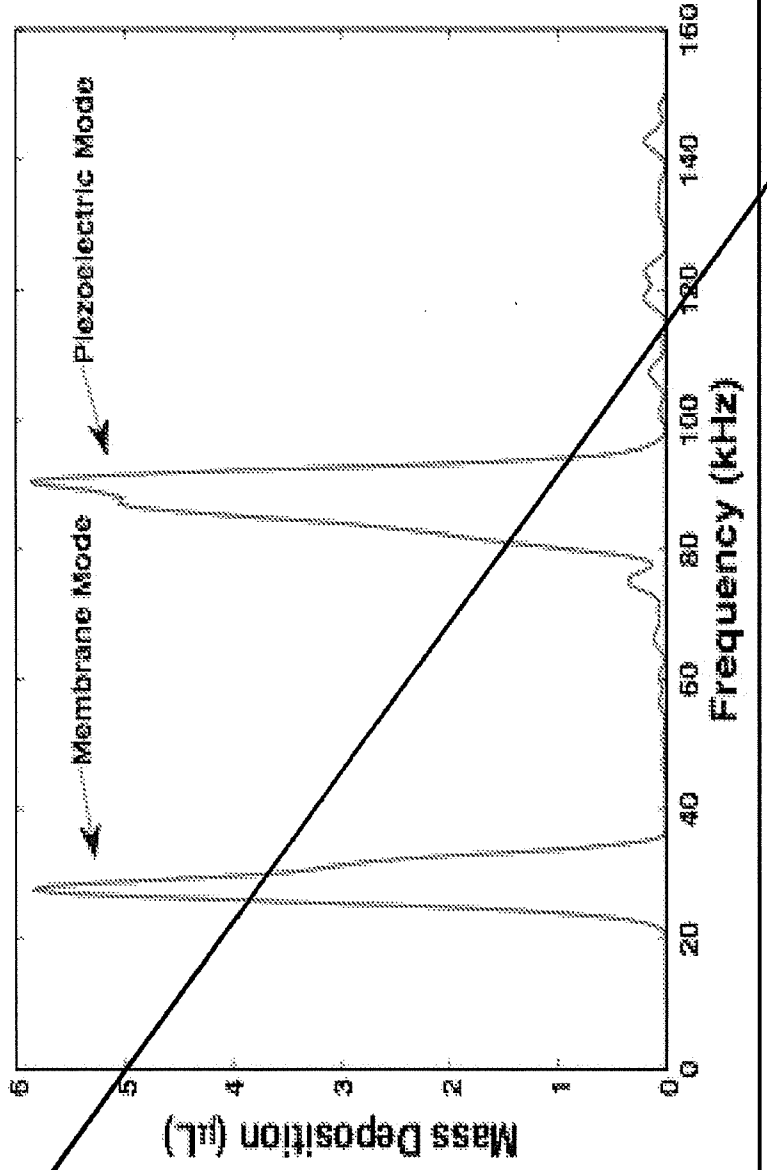
Piezoelectric Mode
Membrane Mode
Mass Deposition (μL)
Frequency (kHz)
0
1
2
3
4
5
6
0
20
40
60
80
100
120
140
160

FIG. 31

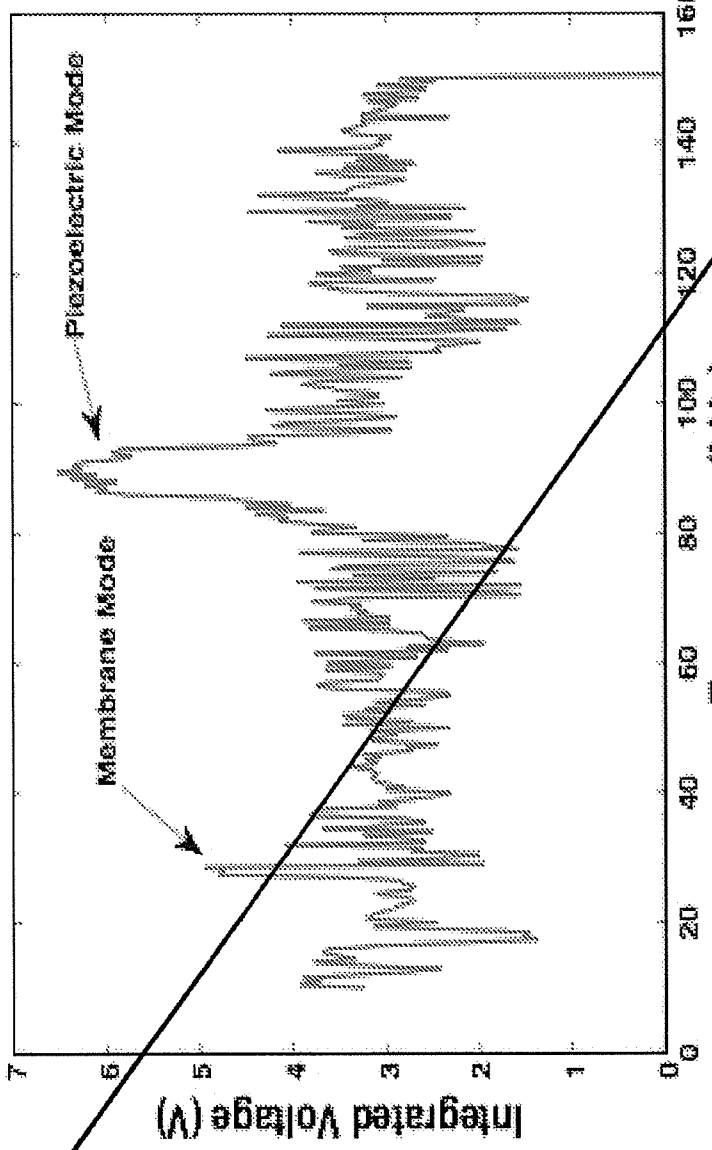
Piezoelectric Mode
Membrane Mode
Integrated Voltage (V)
Frequency (kHz)
0
1
2
3
4
5
6
7
0
20
40
60
80
100
120
140
160

FIG. 32

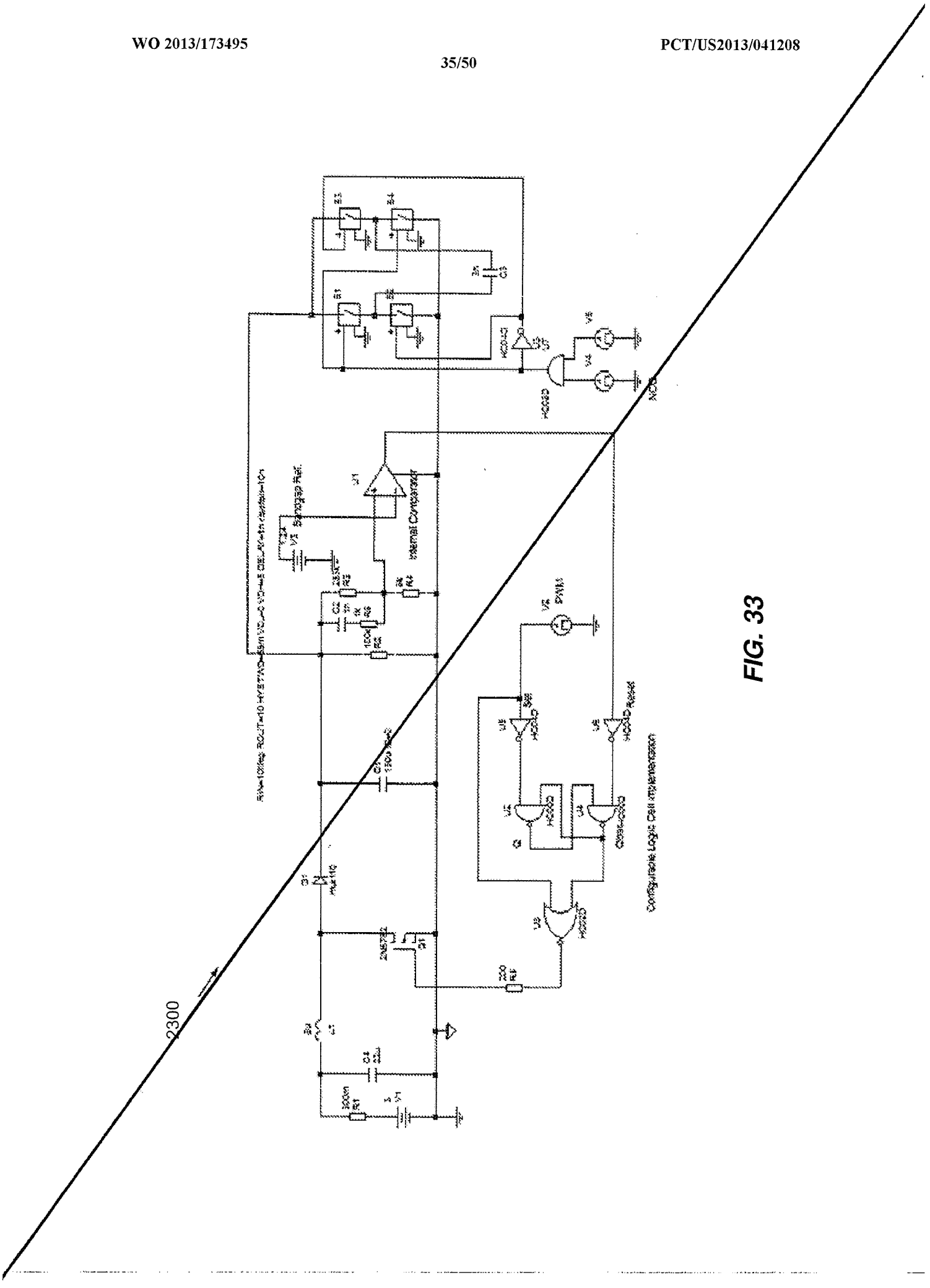
2300
Internal Comparator
Configurable Logic Cell Implementation

FIG. 33

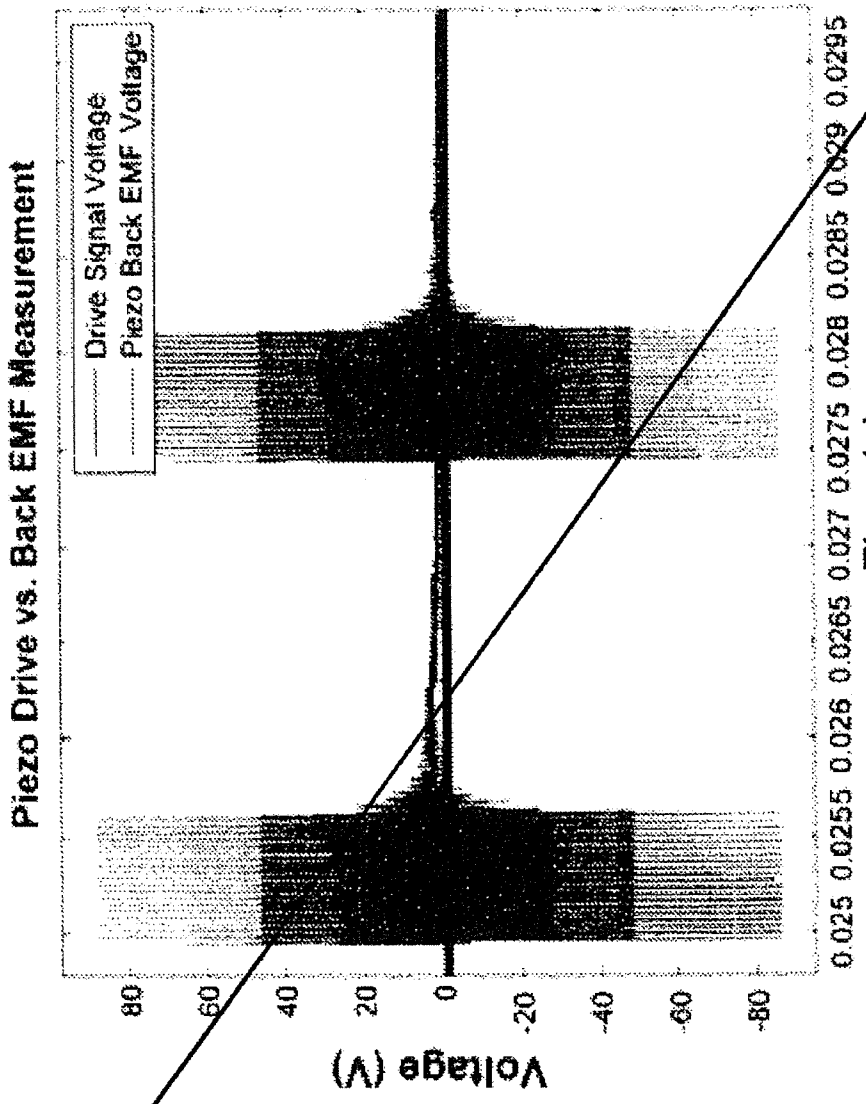
Piezo Drive vs. Back EMF Measurement
Drive Signal Voltage
Piezo Back EMF Voltage
Voltage (V)
80
60
40
20
0
-20
-40
-60
-80
0.025
0.0255
0.026
0.0265
0.027
0.0275
0.028
0.0285
0.029
0.0295
Time (s)

FIG. 34A

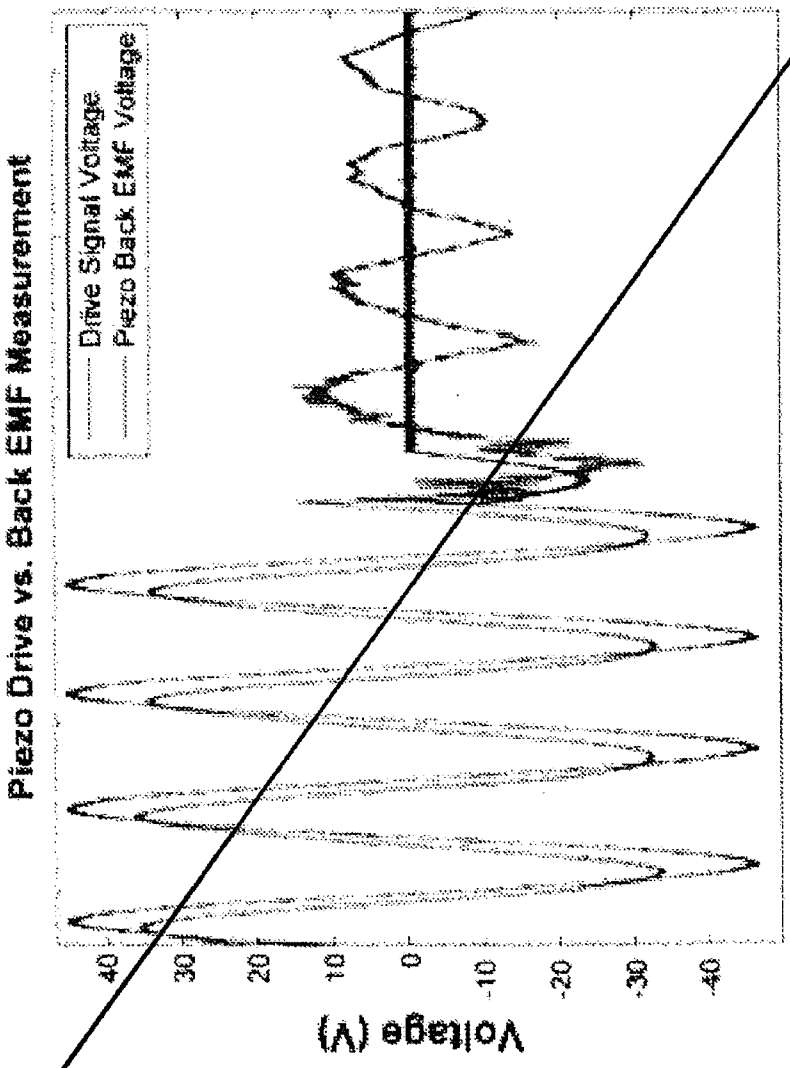
Piezo Drive vs. Back EMF Measurement
Drive Signal Voltage
Piezo Back EMF Voltage
Voltage (V)
40
30
20
10
0
-10
-20
-30
-40
0.0253
0.0253
0.0254
0.0254
0.0255
0.0255
0.0256
Time (s)

FIG. 34B

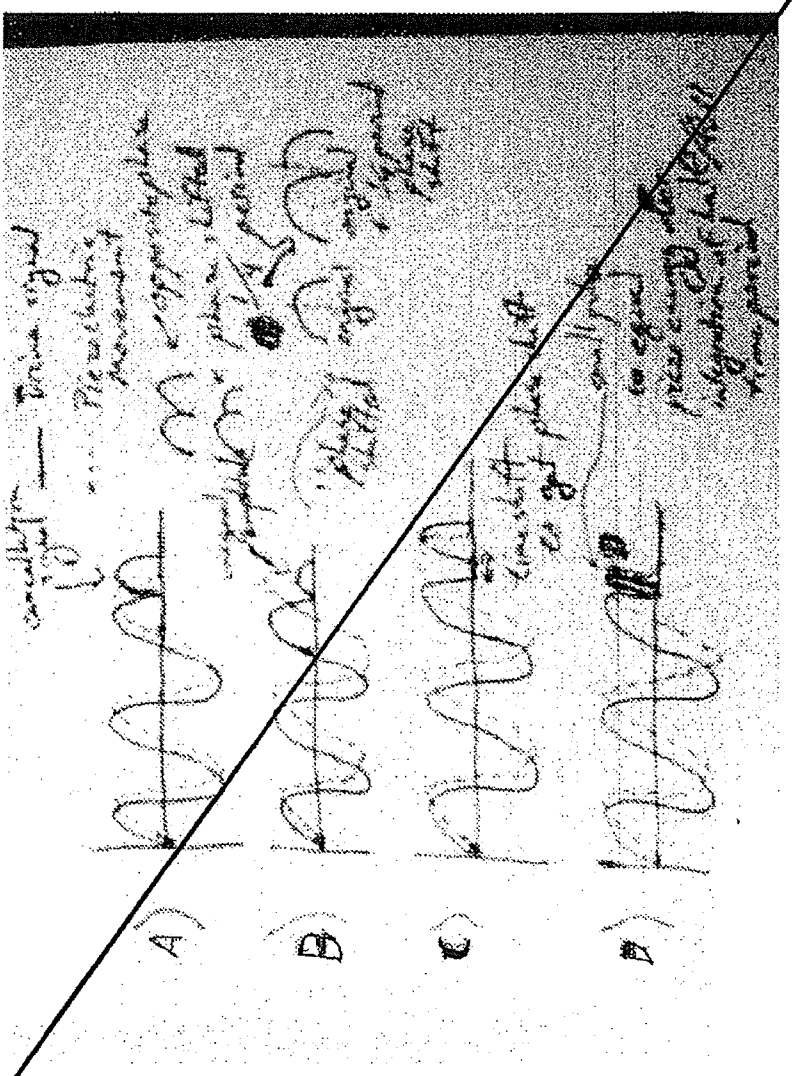

FIG. 35

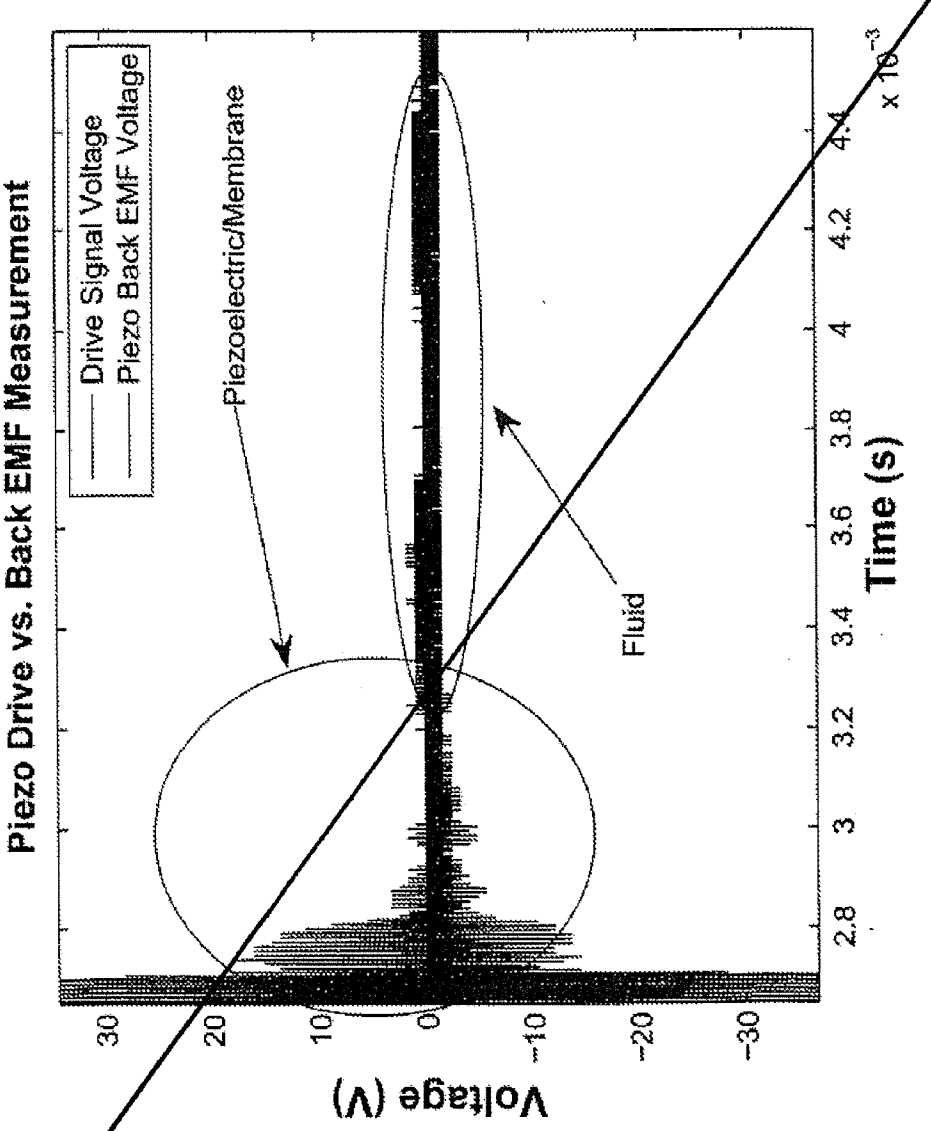
Piezo Drive vs. Back EMF Measurement
Drive Signal Voltage
Piezo Back EMF Voltage
Piezoelectric/Membrane
Fluid
Voltage (V)
Time (s)
x 10^-3
30
20
10
0
-10
-20
-30
2.8
3
3.2
3.4
3.6
3.8
4
4.2
4.4

FIG. 36

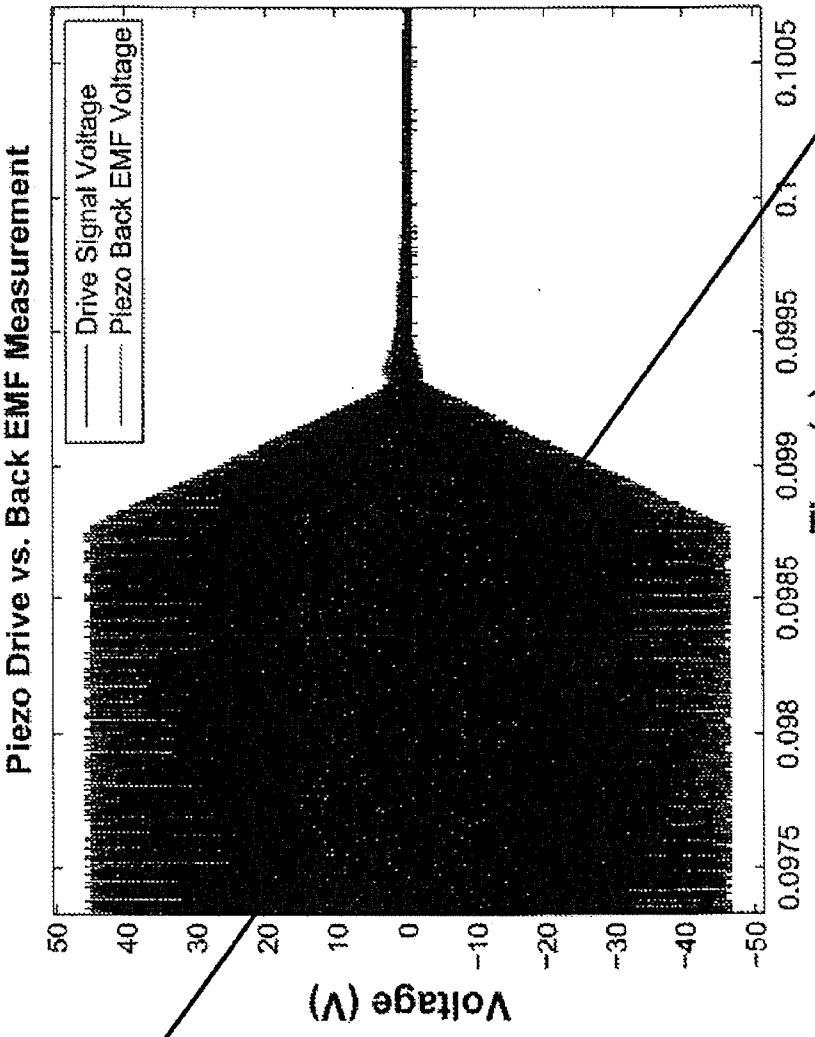
Piezo Drive vs. Back EMF Measurement
Drive Signal Voltage
Piezo Back EMF Voltage
Voltage (V)
50
40
30
20
10
0
-10
-20
-30
-40
-50
0.0975
0.098
0.0985
0.099
0.0995
0.1005
Time (s)

FIG. 37

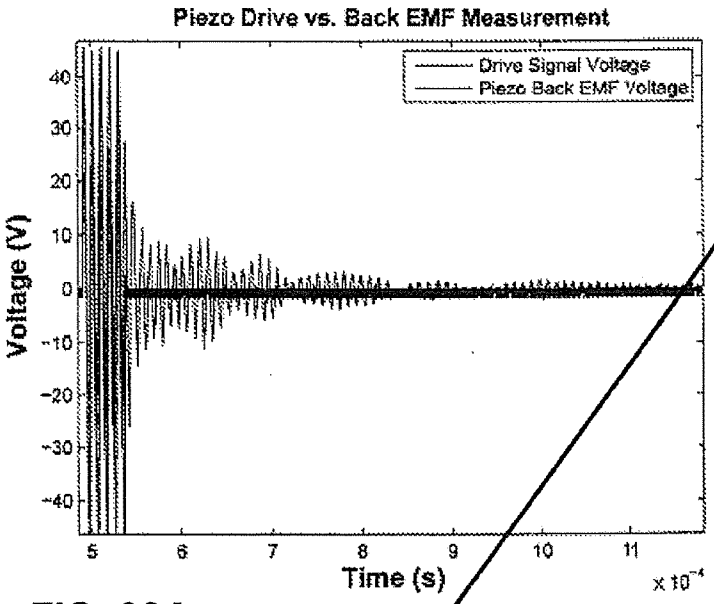

FIG. 38A

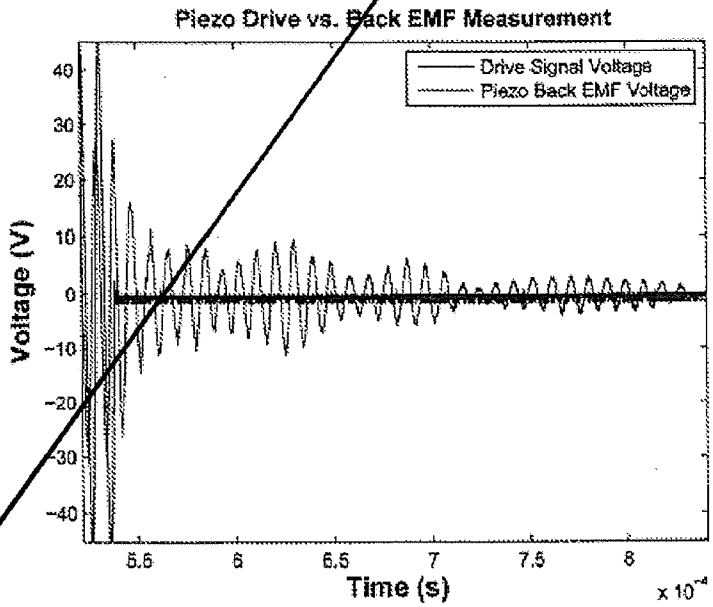

FIG. 38B

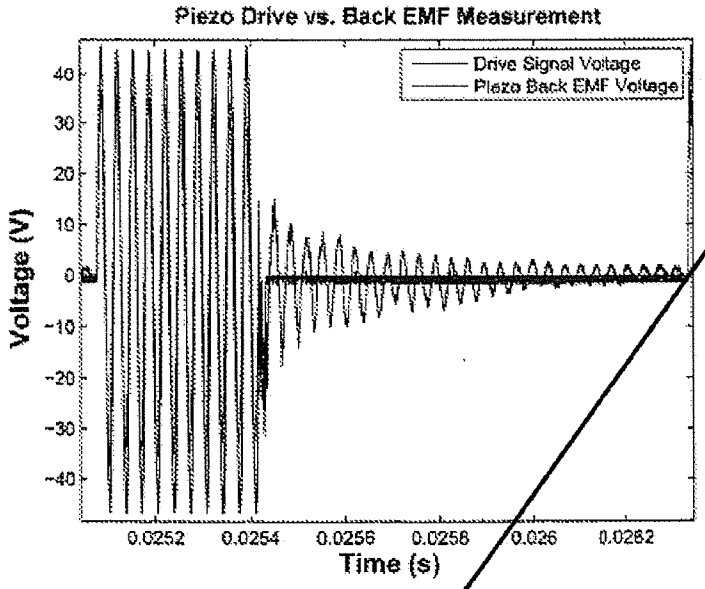

FIG. 39A

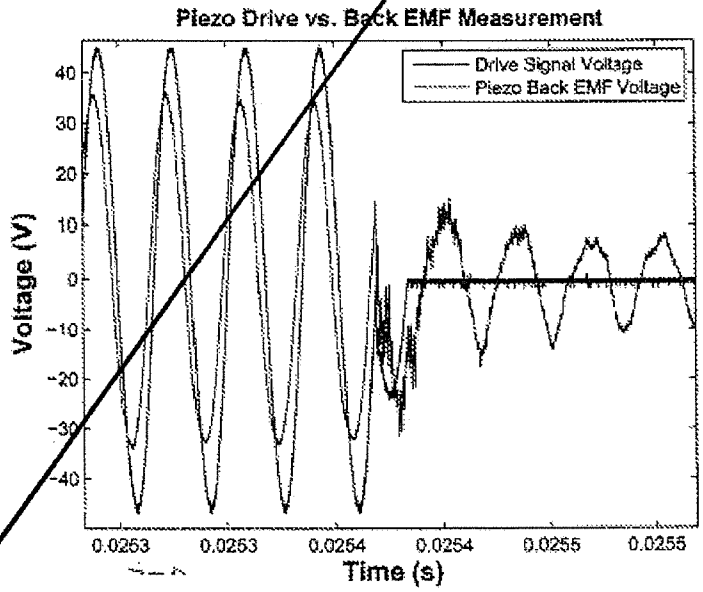

FIG. 39B

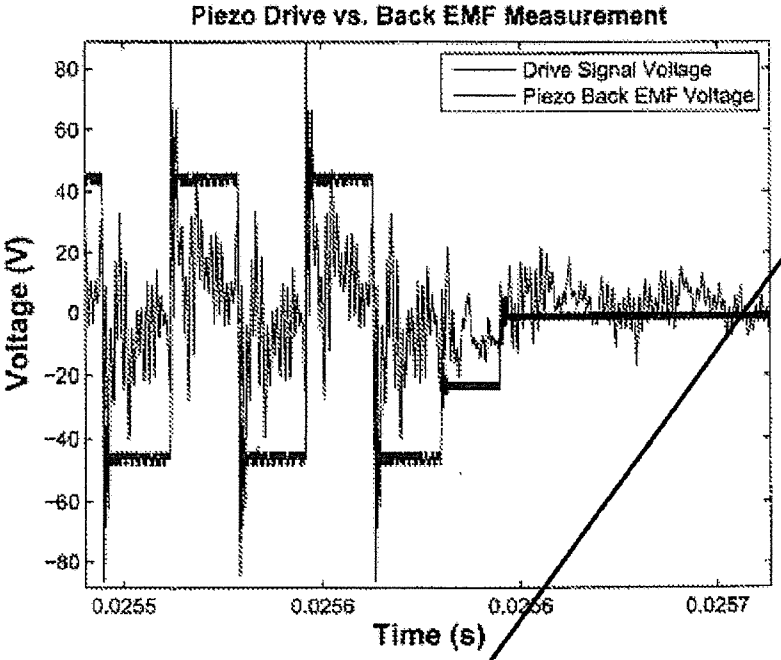
Piezo Drive vs. Back EMF Measurement
Drive Signal Voltage
Piezo Back EMF Voltage
Voltage (V)
80
60
40
20
0
-20
-40
-60
-80
0.0255
0.0256
0.0257
Time (s)

FIG. 40

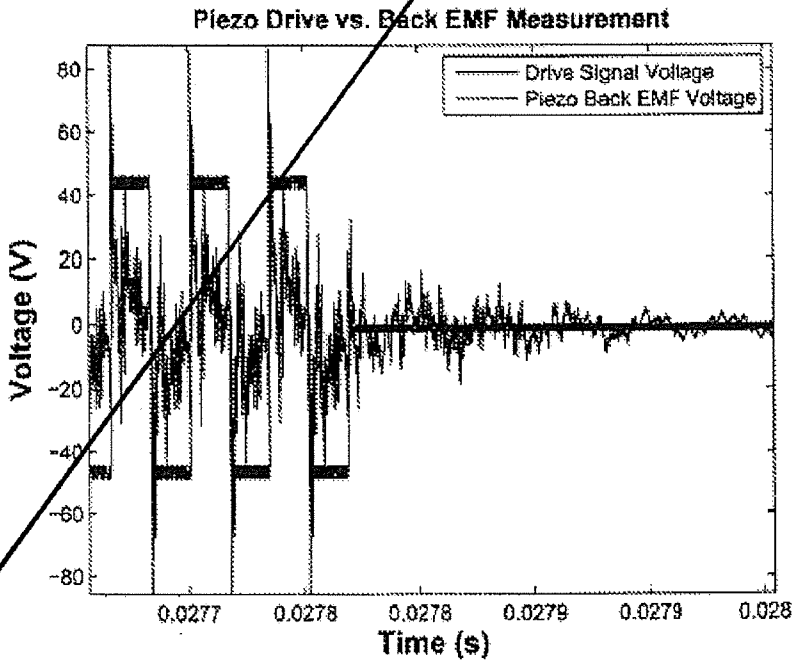
Piezo Drive vs. Back EMF Measurement
Drive Signal Voltage
Piezo Back EMF Voltage
Voltage (V)
80
60
40
20
0
-20
-40
-60
-80
0.0277
0.0278
0.0278
0.0279
0.0279
0.028
Time (s)

FIG. 41

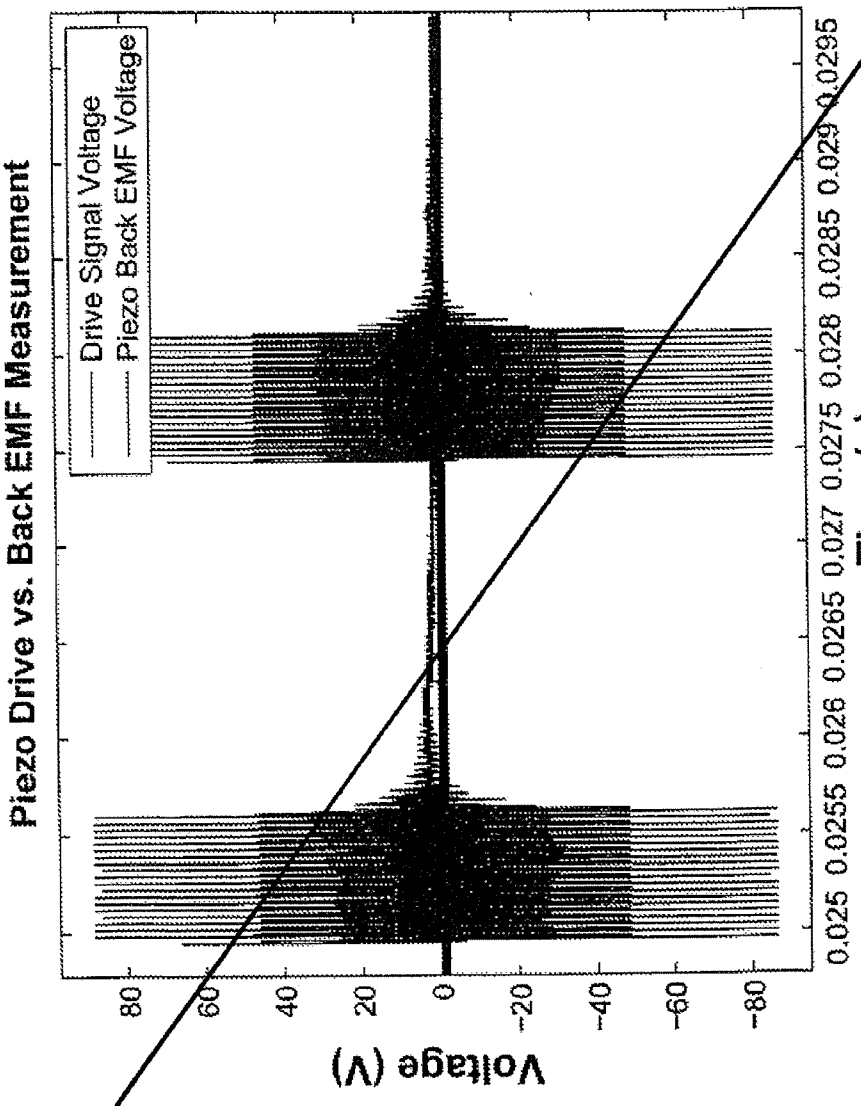
Piezo Drive vs. Back EMF Measurement
Drive Signal Voltage
Piezo Back EMF Voltage
Voltage (V)
80
60
40
20
0
-20
-40
-60
-80
0.025
0.0255
0.026
0.0265
0.027
0.0275
0.028
0.0285
0.029
0.0295
Time (s)

FIG. 42

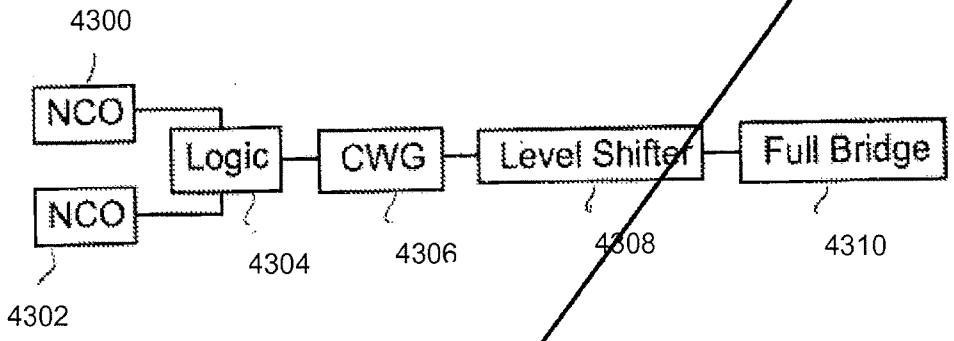
4300
NCO
NCO
Logic
CWG
Level Shifter
Full Bridge
4302
4304
4306
4308
4310

FIG. 43

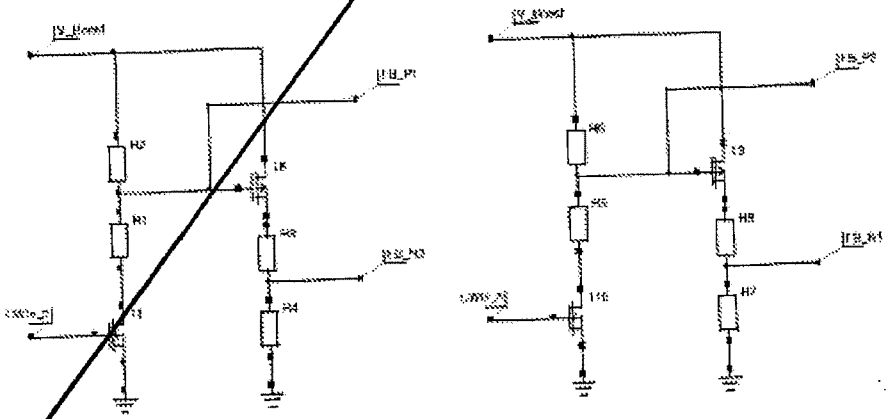

FIG. 44

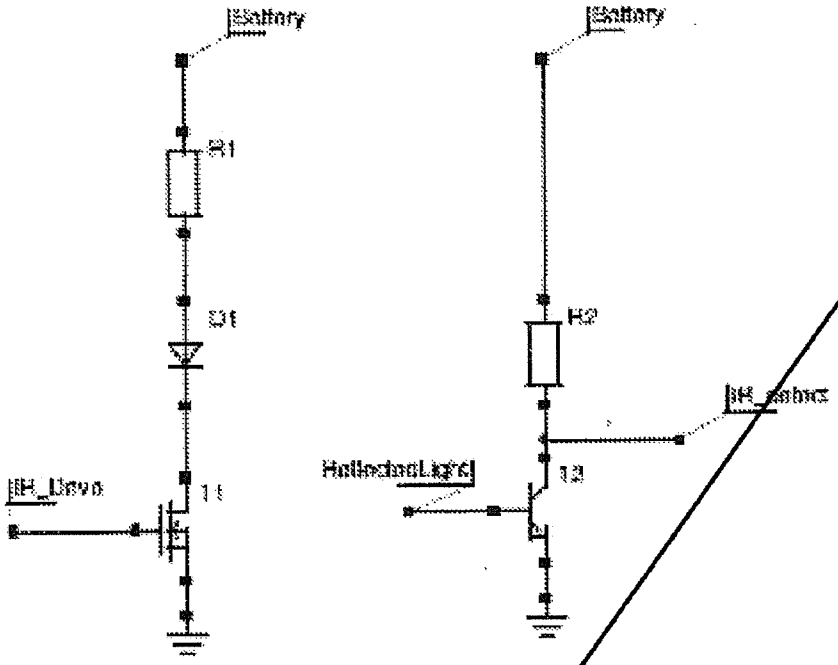
Battery
R1
D1
T1
Battery
R2
T2

FIG. 45

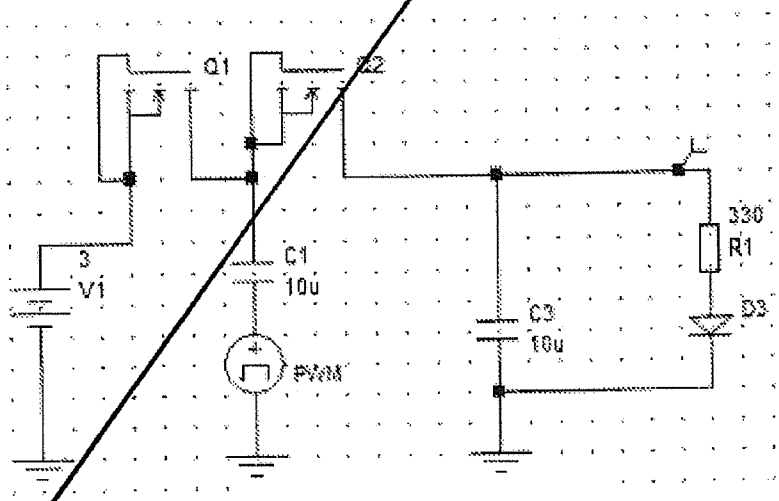
Q1
Q2
3
V1
C1
10u
PWM
C3
10u
330
R1
D3

FIG. 46

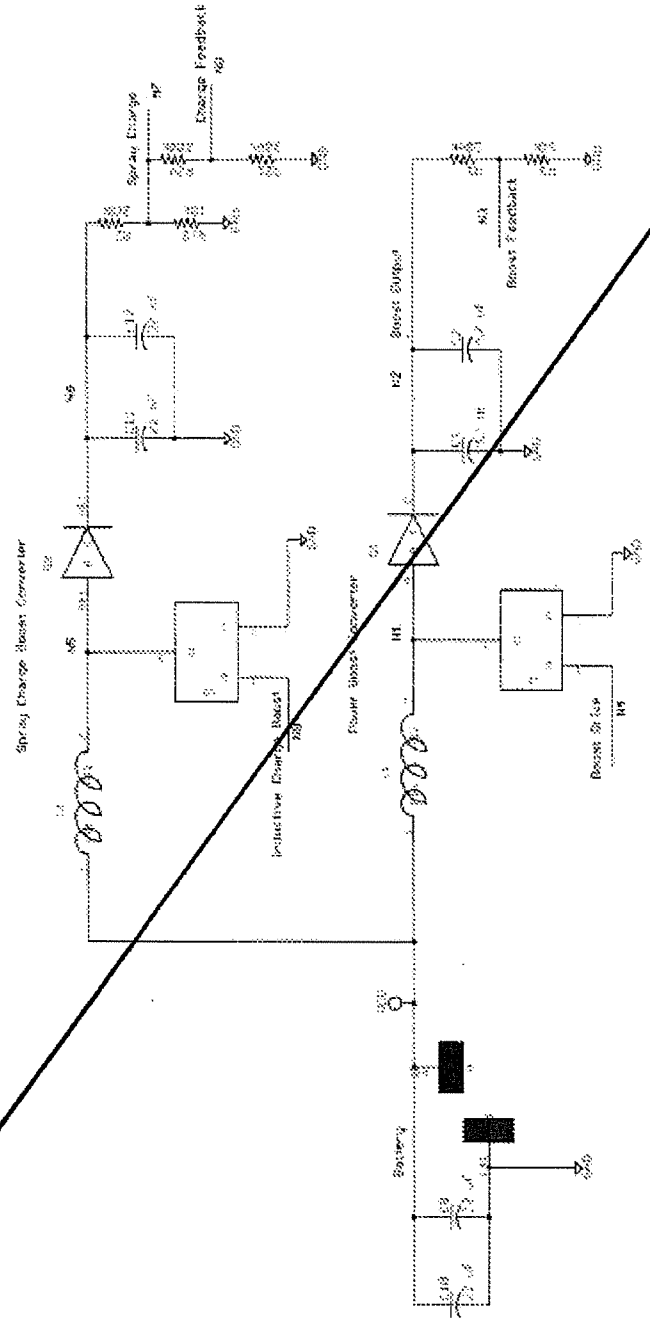

FIG. 47

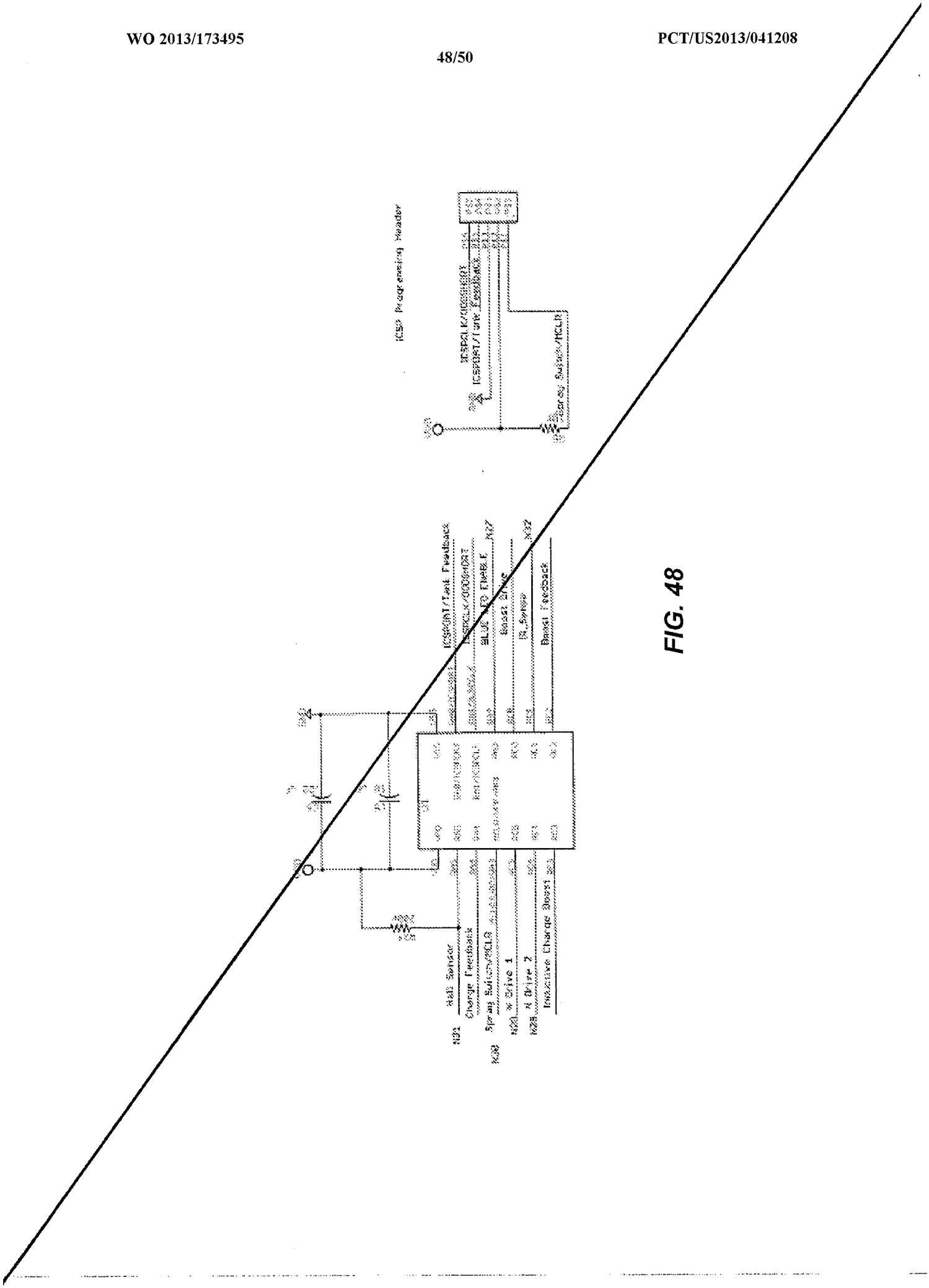

FIG. 48

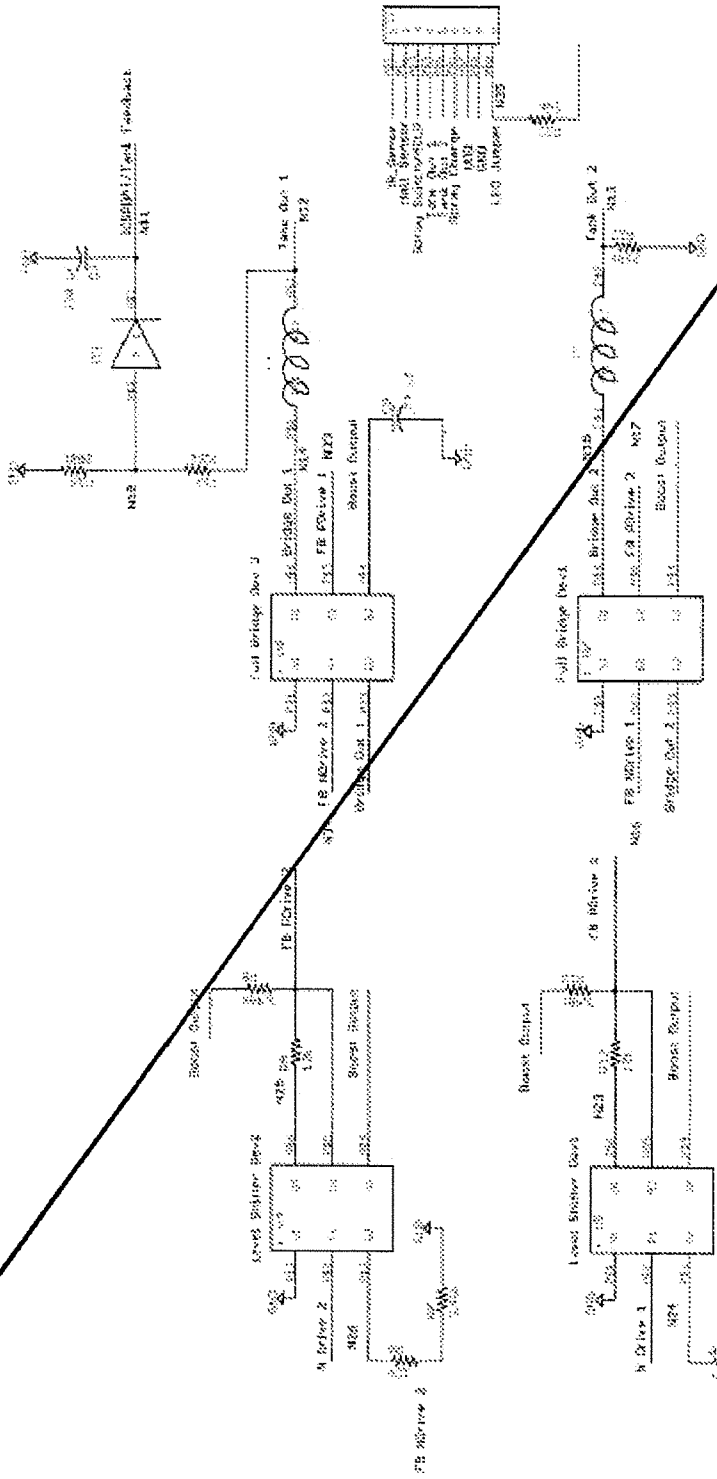

FIG. 49

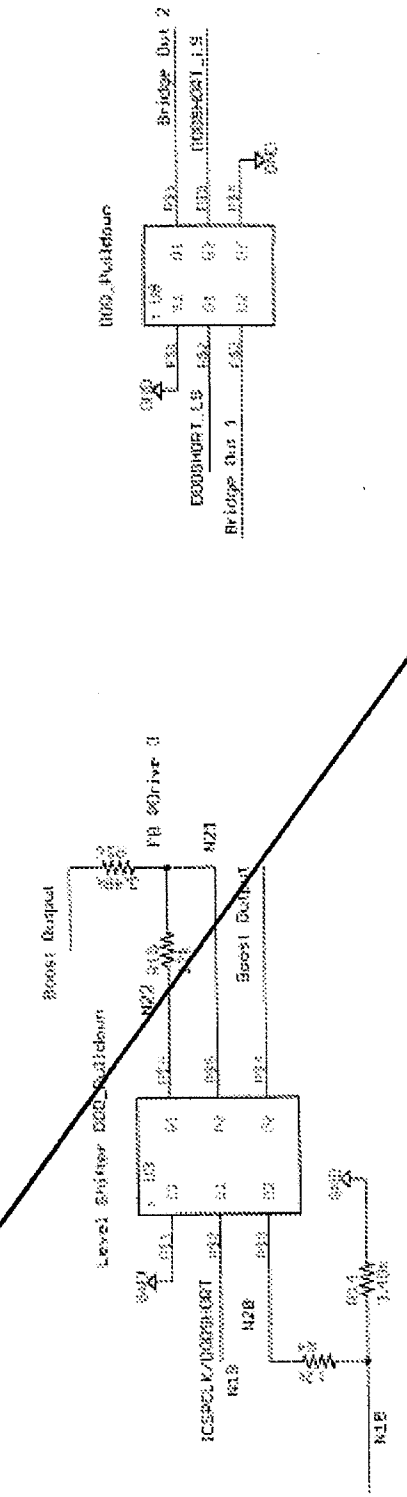

FIG. 50

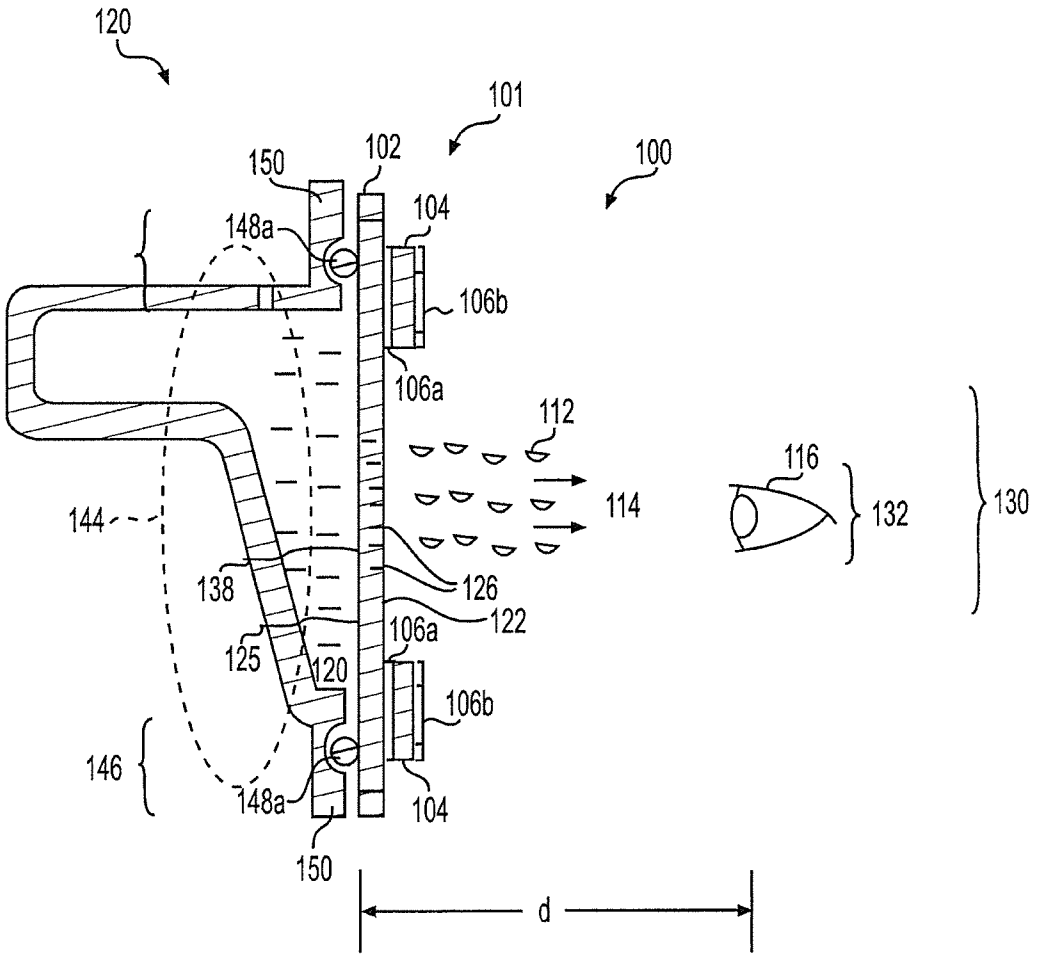
120
101
100
150
102
104
148a
106b
106a
112
116
114
132
130
144
138
126
122
125
120
106a
106b
146
148a
104
150
d

FIG. 1

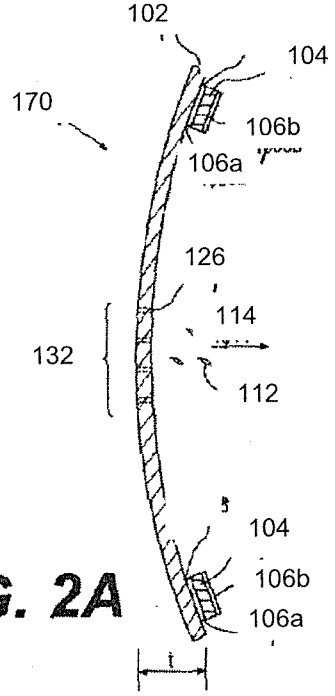
102
104
170
106b
106a
126
114
132
112
104
106b
106a
t

FIG. 2A

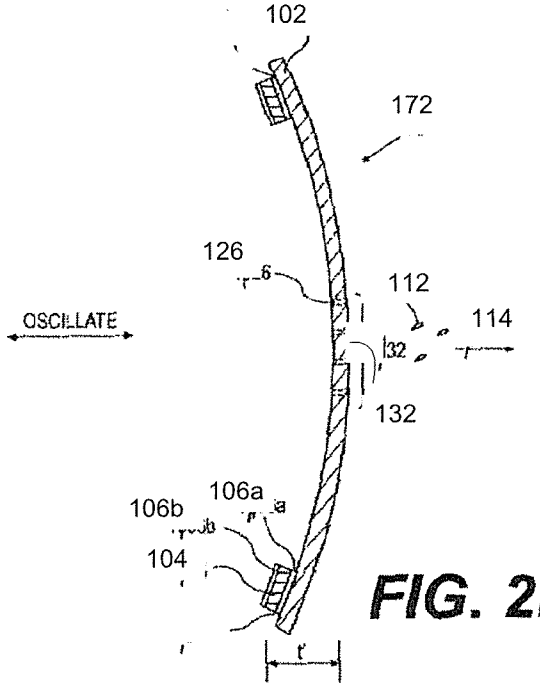
102
172
126
112
114
OSCILLATE
132
132
106a
106b
104
t'

FIG. 2B

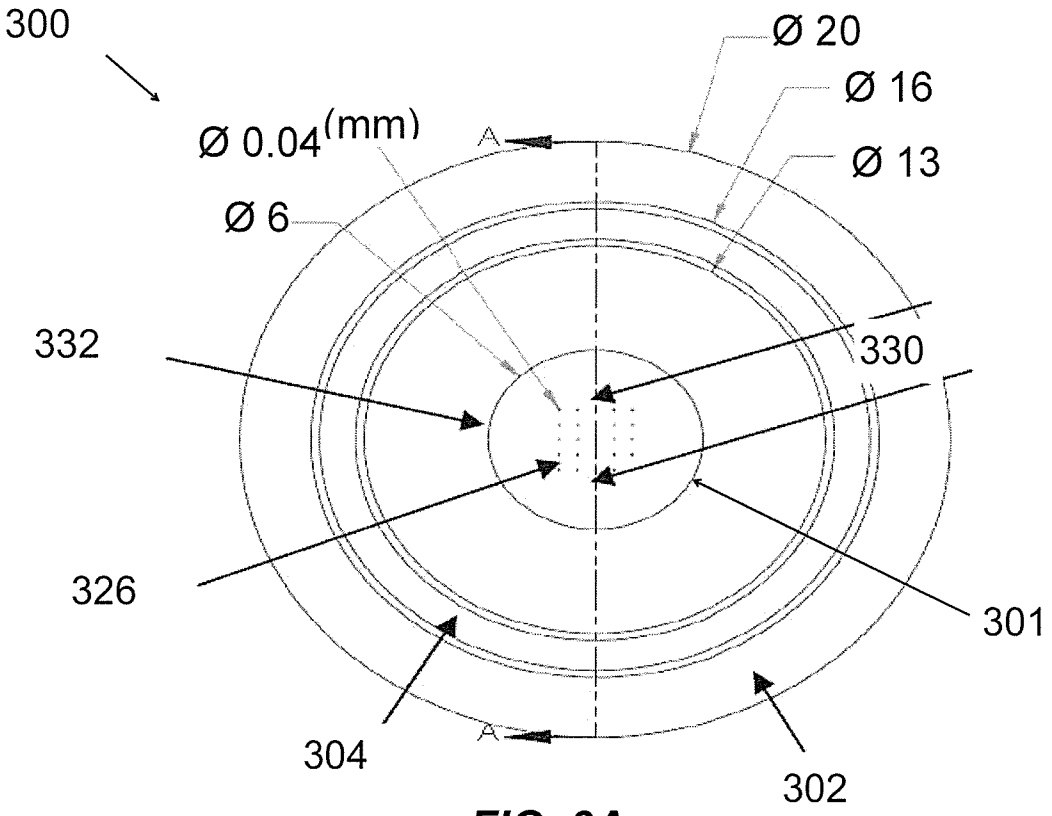
300
Ø 20
Ø 16
Ø 13
Ø 0.04(mm)
Ø 6
A
A
332
330
326
301
304
302

FIG. 3A

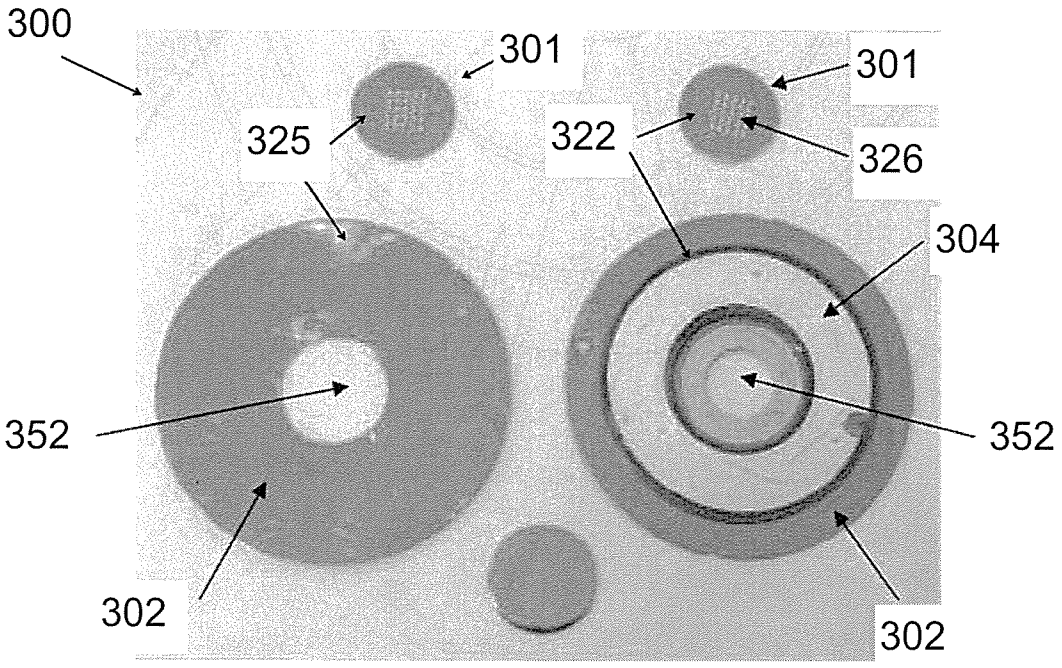
300
301
301
325
322
326
304
352
352
302
302

FIG. 3B

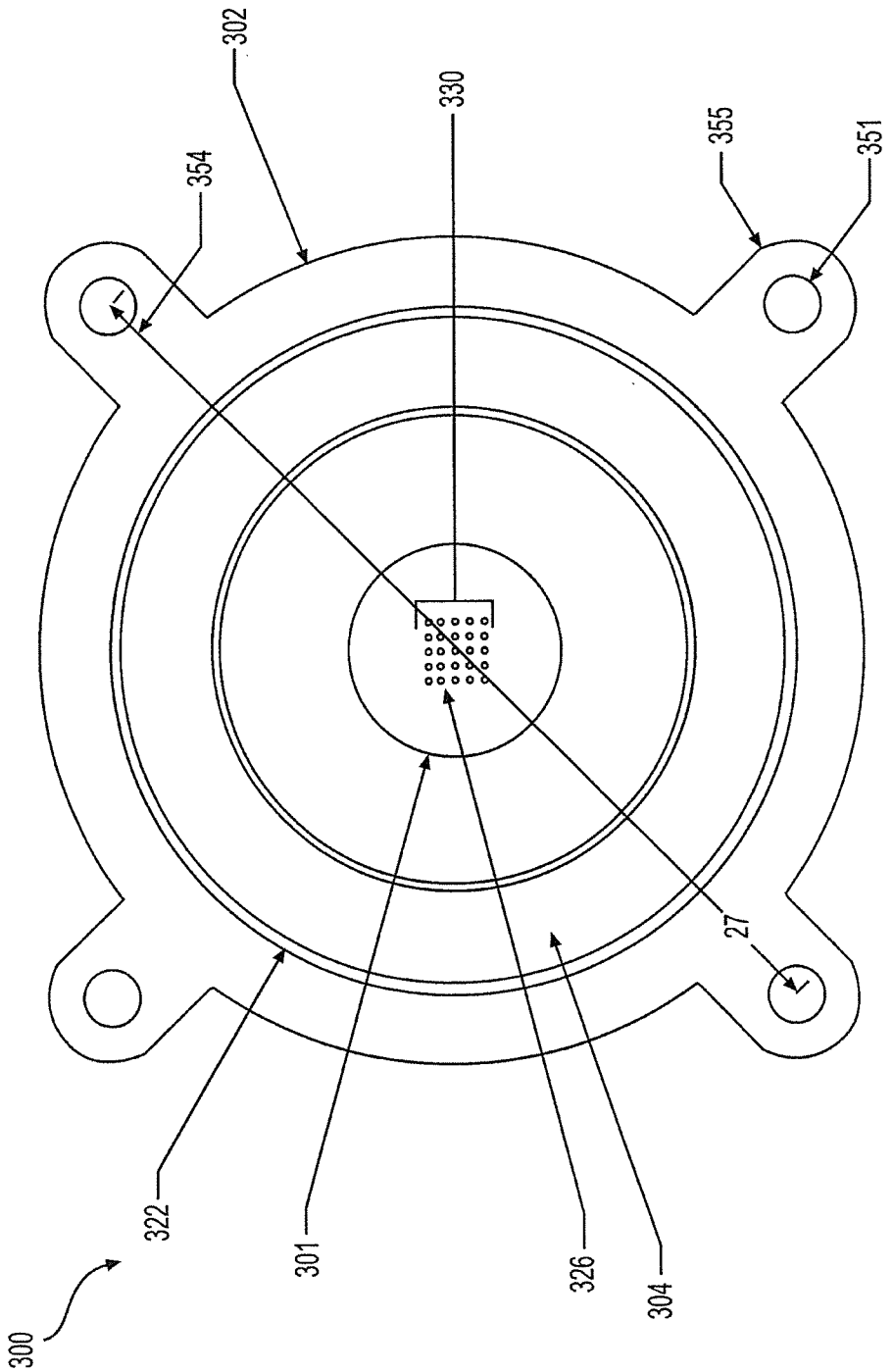

FIG. 3C

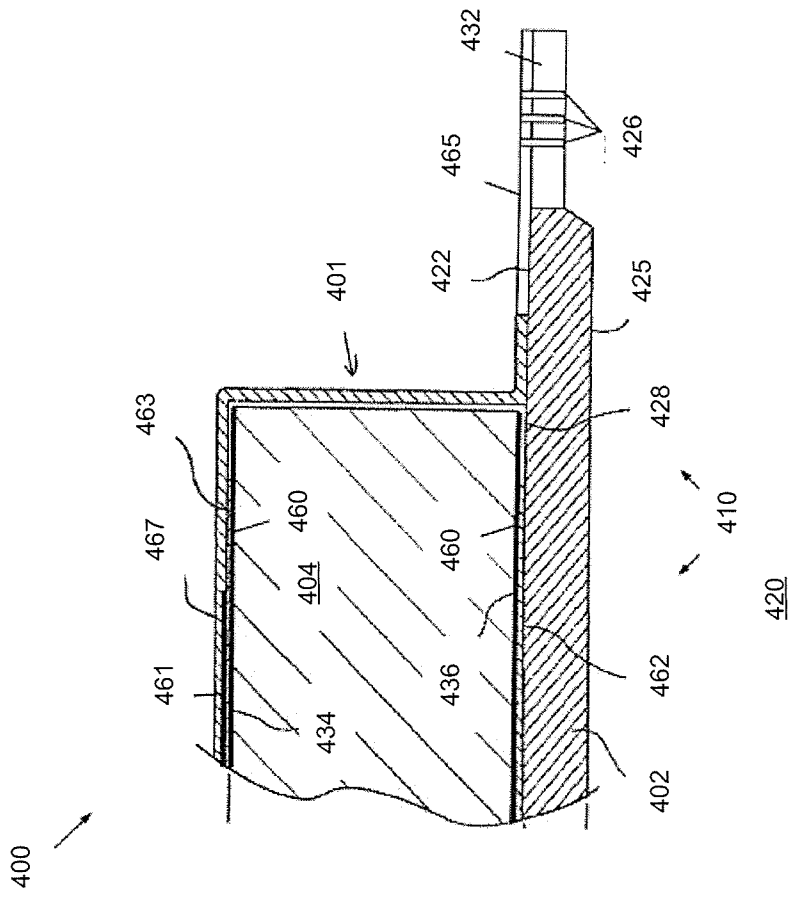
400
401
404
410
420
422
425
426
428
432
434
436
460
460
461
462
463
465
467
402

FIG. 4

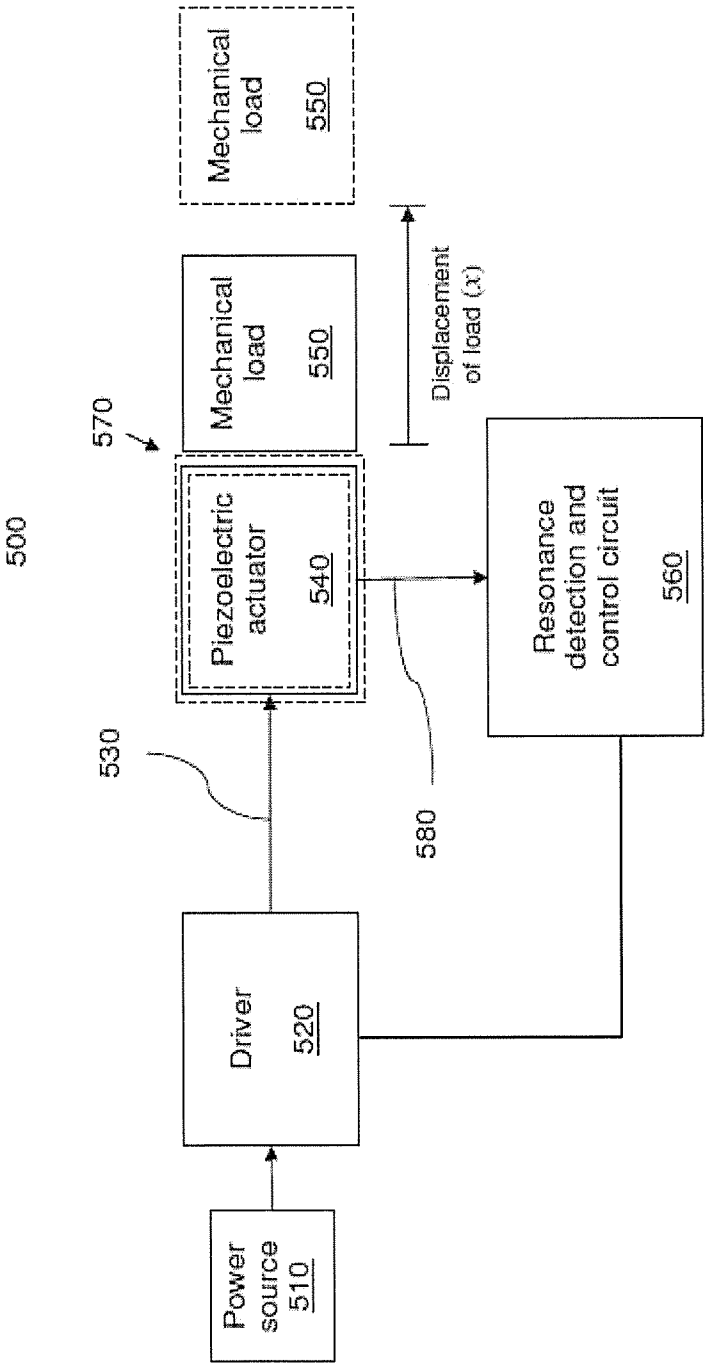
500
570
Power source 510
Driver 520
530
Piezoelectric actuator 540
Mechanical load 550
Mechanical load 550
Displacement of load (x)
580
Resonance detection and control circuit 560

FIG. 5

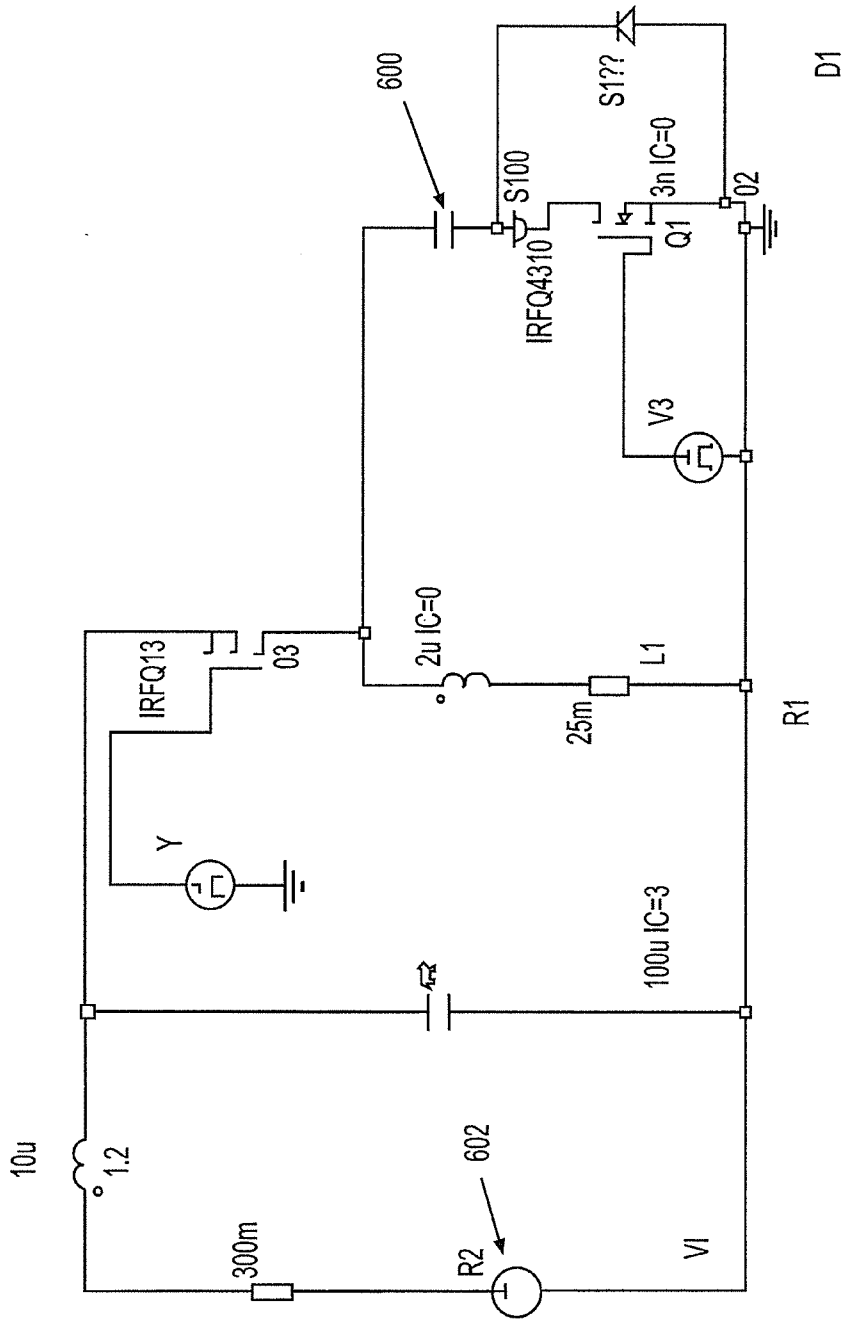
600
S1??
D1
S100
3n IC=0
02
IRFQ4310
Q1
V3
IRFQ13
03
2u IC=0
L1
25m
R1
Y
100u IC=3
10u
1.2
602
300m
R2
VI

FIG. 6

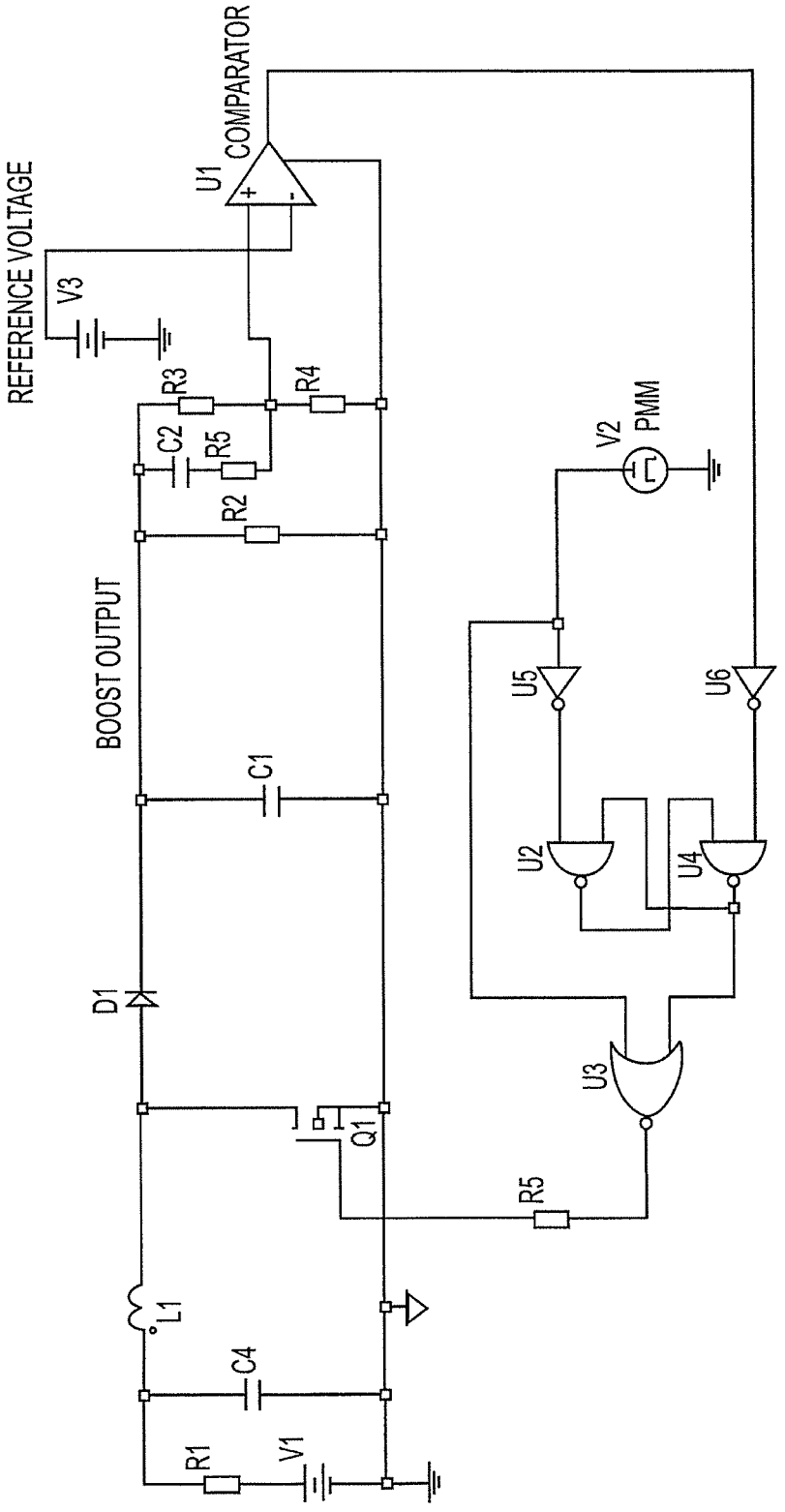
REFERENCE VOLTAGE
V3
U1
COMPARATOR
+
-
R3
R4
C2
R5
R2
V2
PMM
BOOST OUTPUT
C1
U5
U6
U2
U4
D1
U3
Q1
R5
L1
C4
R1
V1

FIG. 7

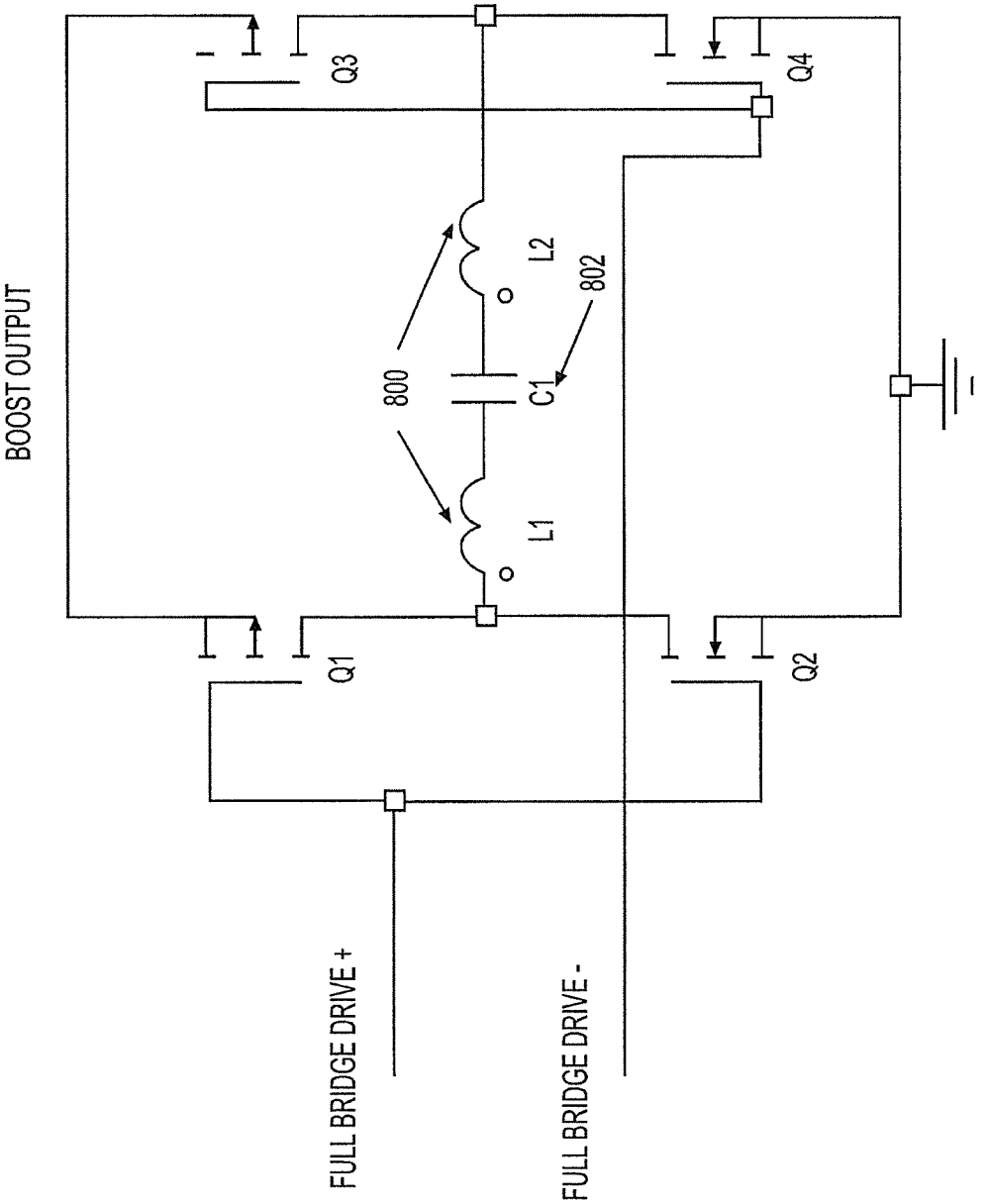
BOOST OUTPUT
Q3
Q4
L2
802
800
C1
L1
Q1
Q2
FULL BRIDGE DRIVE +
FULL BRIDGE DRIVE -

FIG. 8

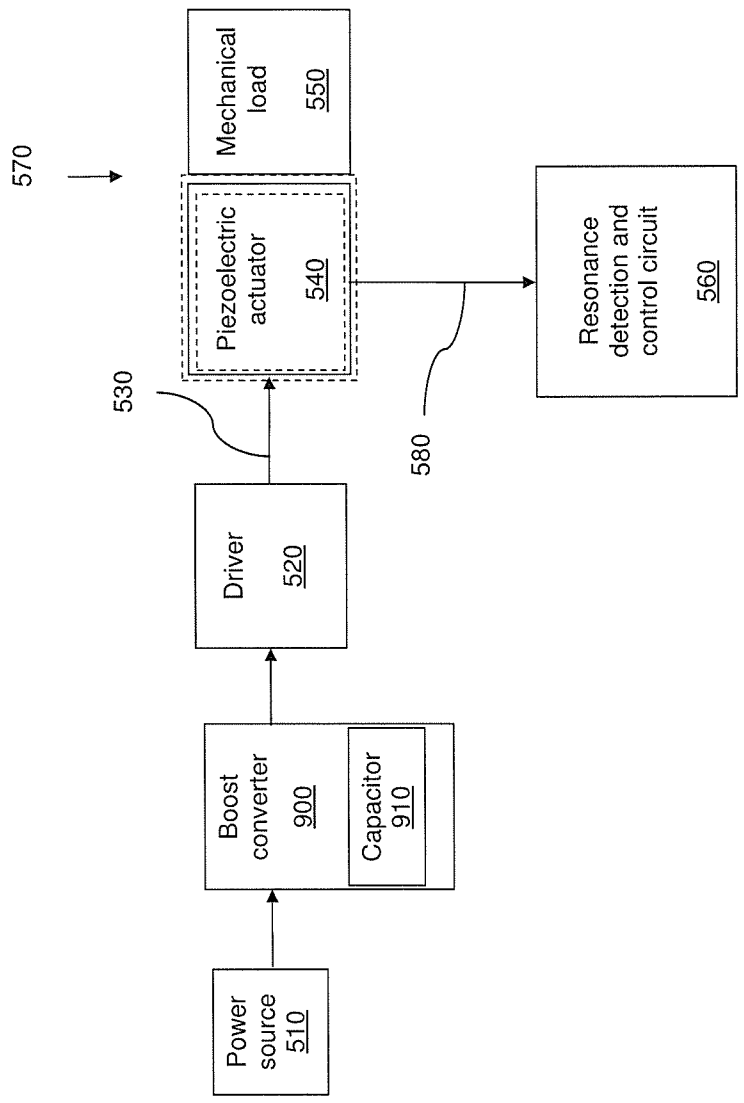
570
Mechanical load 550
Piezoelectric actuator 540
Resonance detection and control circuit 560
530
580
Driver 520
Boost converter 900
Capacitor 910
Power source 510

FIG. 9

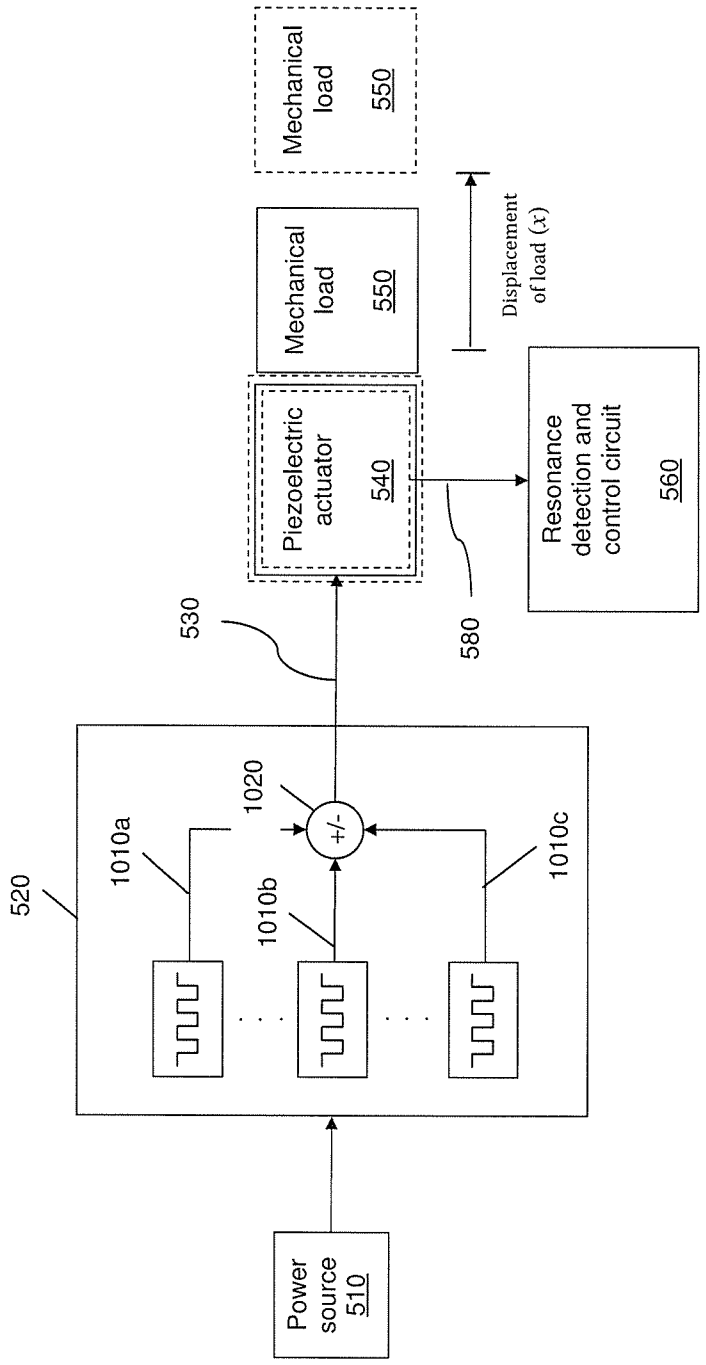
Mechanical load 550
Mechanical load 550
Displacement of load (x)
Piezoelectric actuator 540
Resonance detection and control circuit 560
530
580
520
1010a
1020
+/-
1010b
1010c
Power source 510

FIG. 10

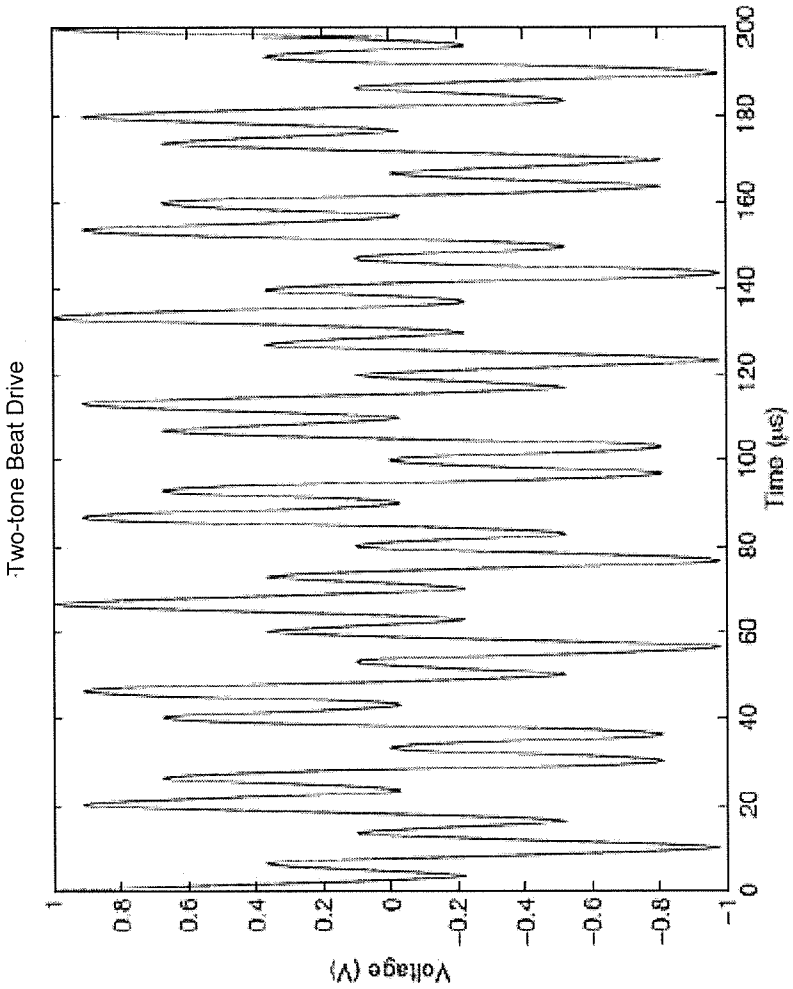
Two-tone Beat Drive
Voltage (V)
Time (µs)
1
0.8
0.6
0.4
0.2
0
−0.2
−0.4
−0.6
−0.8
−1
0
20
40
60
80
100
120
140
160
180
200

FIG. 11

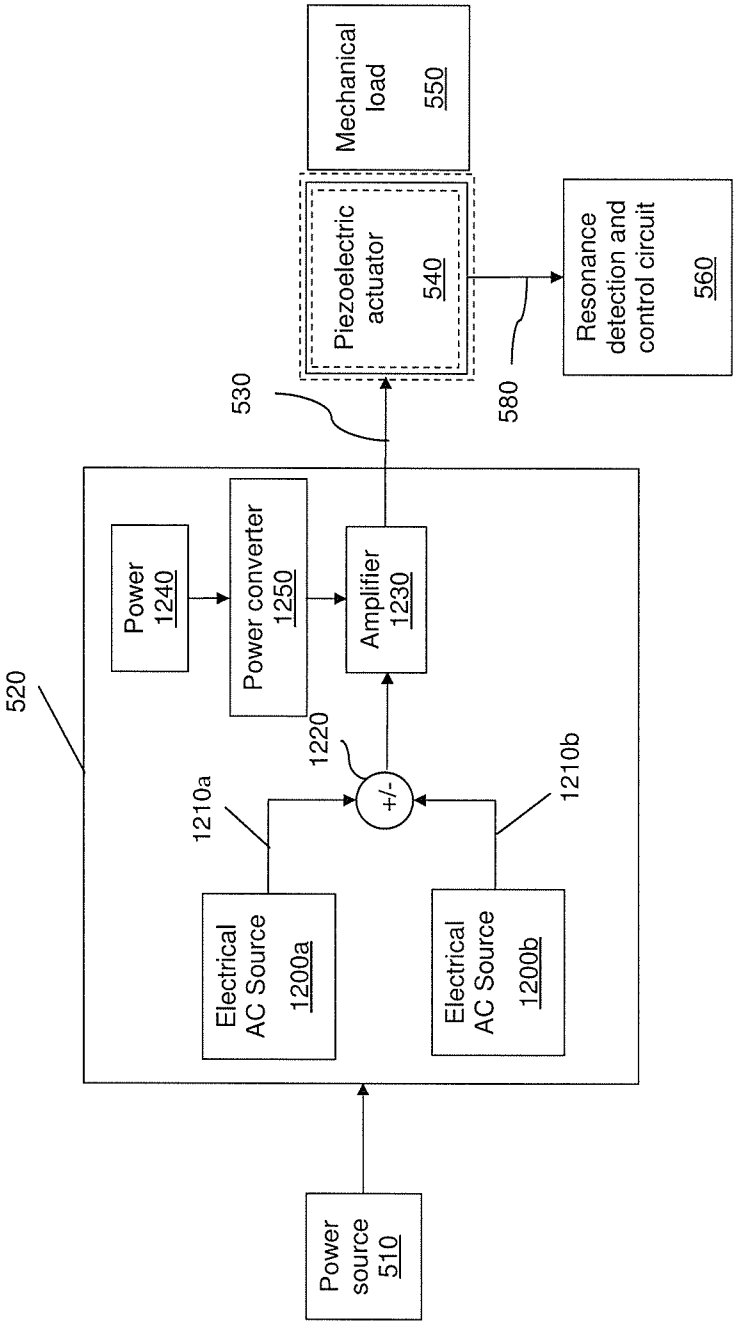
Power source 510
520
Electrical AC Source 1200a
Electrical AC Source 1200b
1210a
1210b
1220
+/-
Power 1240
Power converter 1250
Amplifier 1230
530
580
Piezoelectric actuator 540
Mechanical load 550
Resonance detection and control circuit 560

FIG. 12

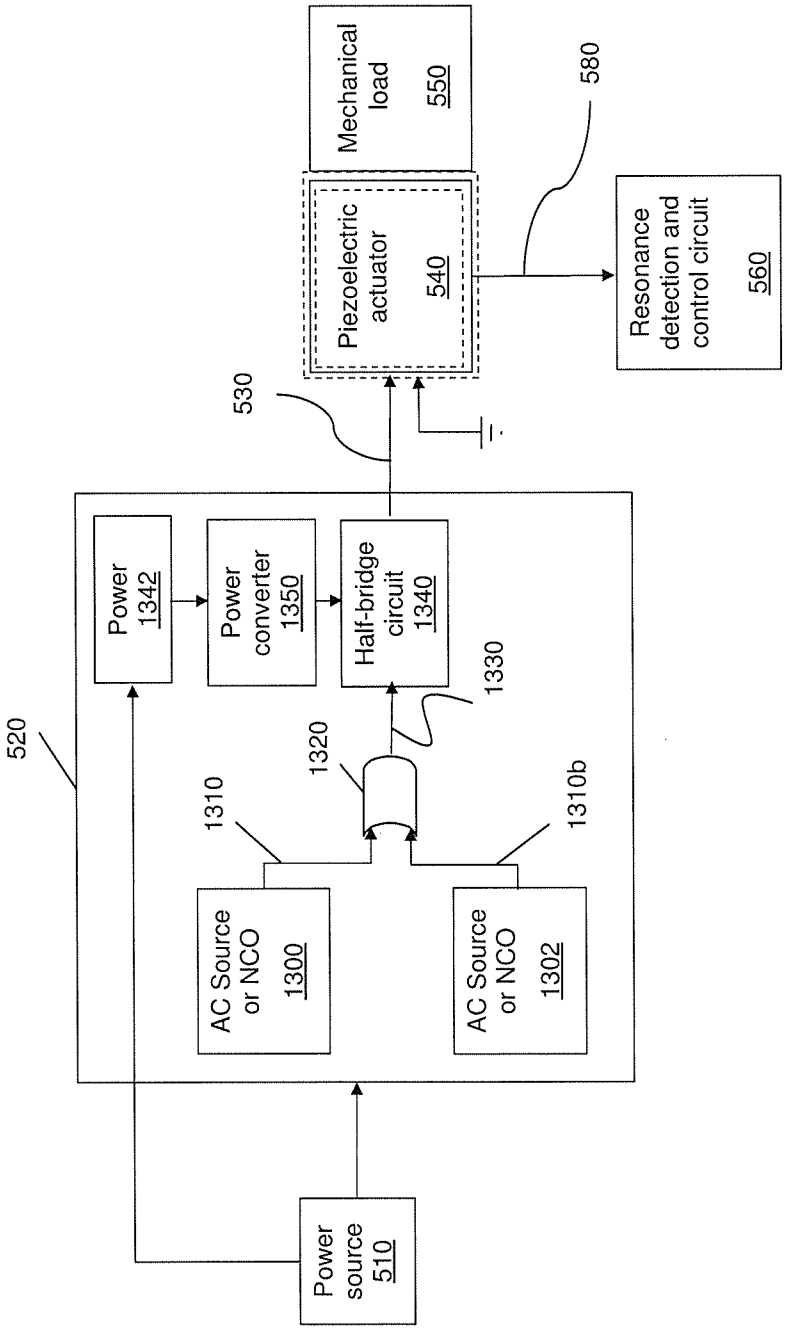
Mechanical load 550
580
Piezoelectric actuator 540
Resonance detection and control circuit 560
530
Power 1342
Power converter 1350
Half-bridge circuit 1340
1330
520
1320
1310
1310b
AC Source or NCO 1300
AC Source or NCO 1302
Power source 510

FIG. 13

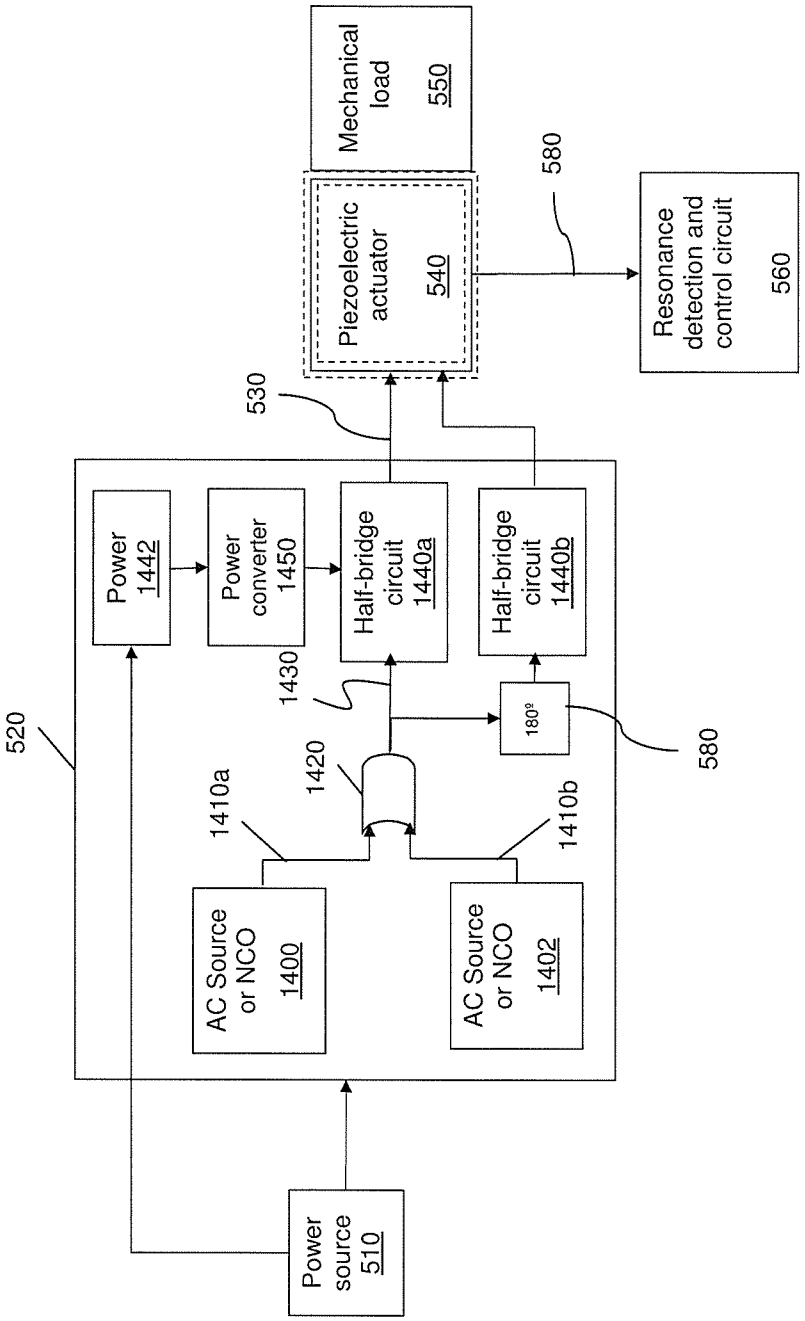
Mechanical load 550
580
Piezoelectric actuator 540
Resonance detection and control circuit 560
530
Power 1442
Power converter 1450
Half-bridge circuit 1440a
Half-bridge circuit 1440b
1430
180°
580
520
1420
1410a
1410b
AC Source or NCO 1400
AC Source or NCO 1402
Power source 510

FIG. 14

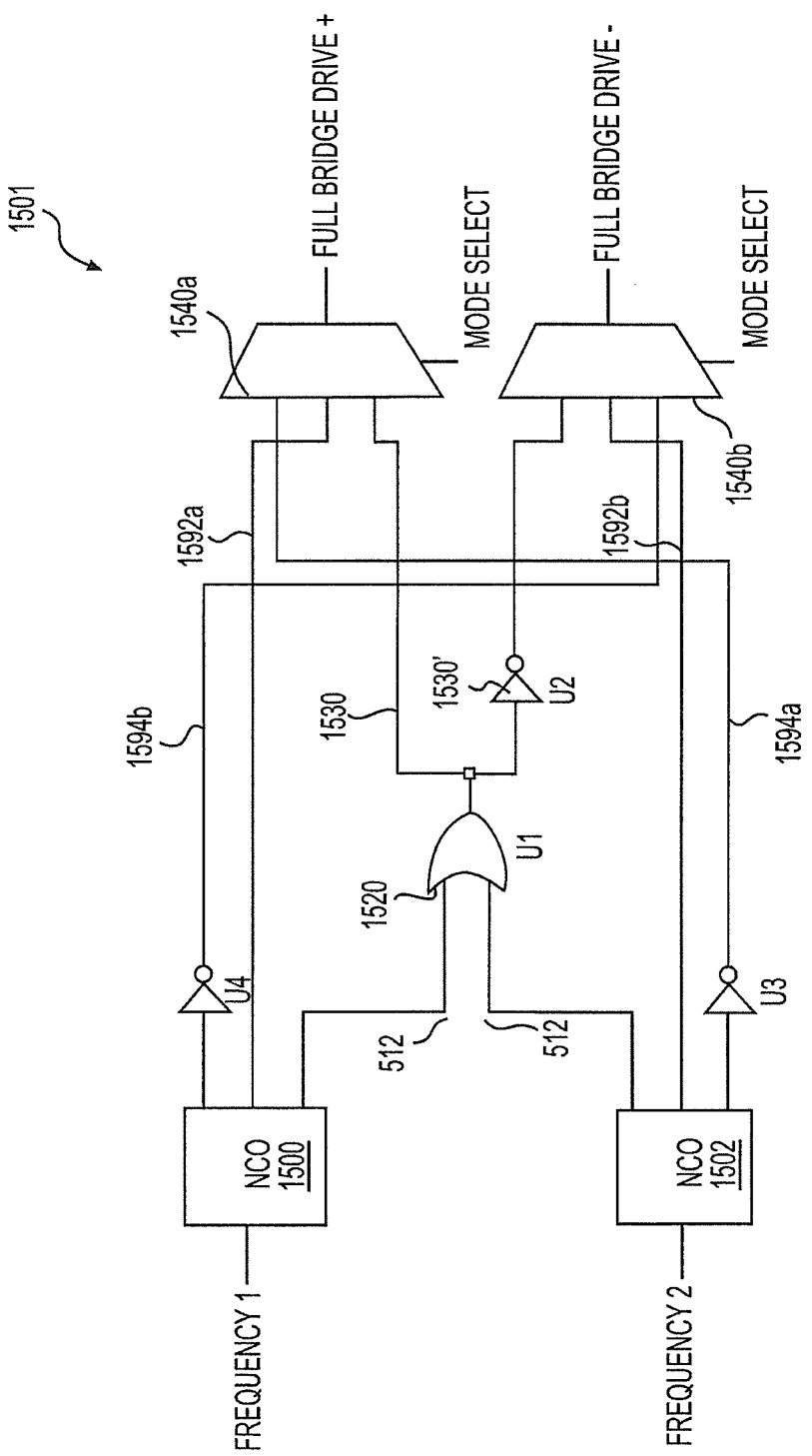
1501
FULL BRIDGE DRIVE +
MODE SELECT
FULL BRIDGE DRIVE -
MODE SELECT
1540a
1540b
1592a
1592b
1530
1530'
U2
1594b
1594a
U1
1520
U4
U3
512
512
NCO 1500
NCO 1502
FREQUENCY 1
FREQUENCY 2

FIG. 15

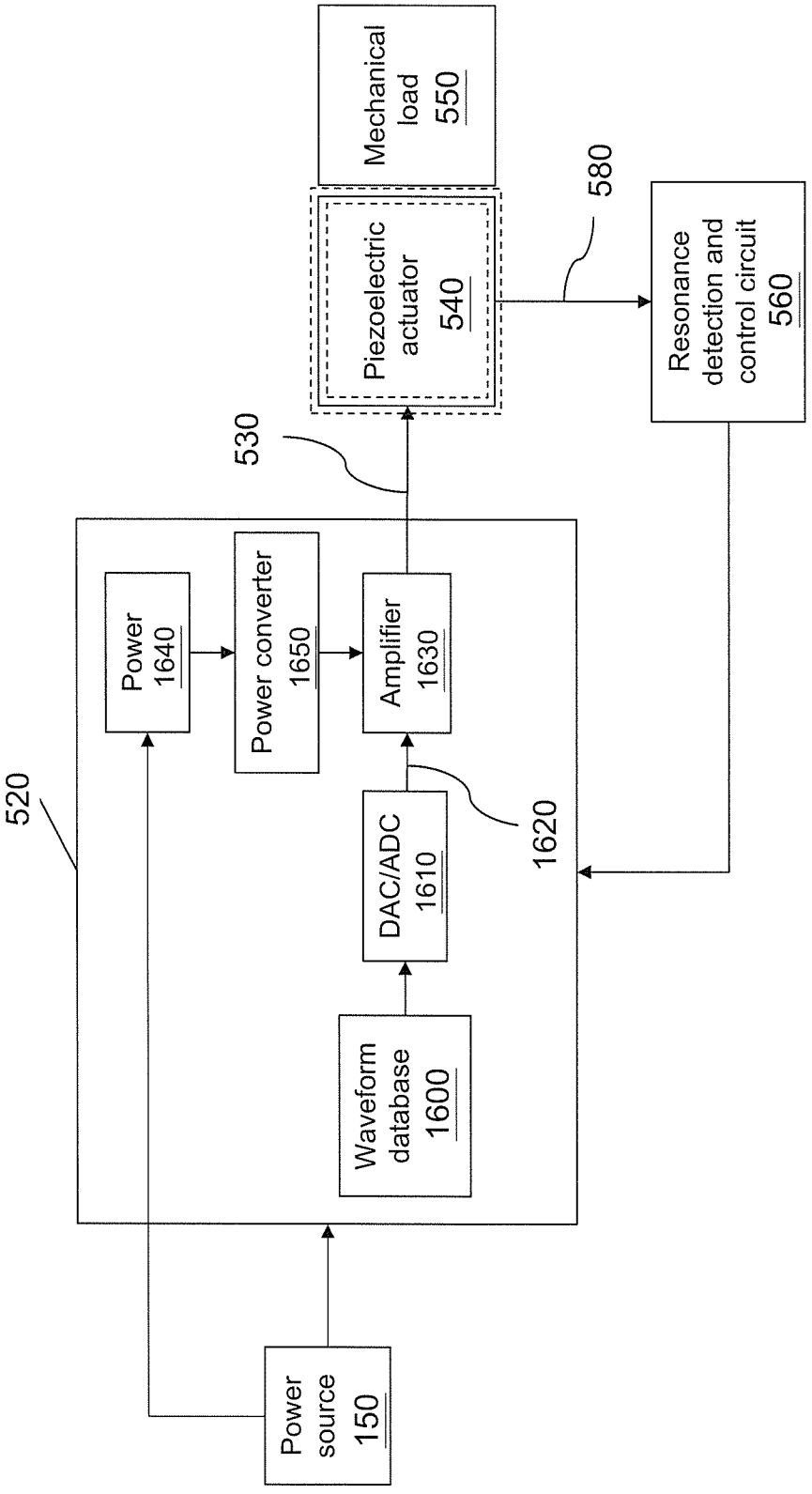
Mechanical load 550
580
Piezoelectric actuator 540
Resonance detection and control circuit 560
530
520
Power 1640
Power converter 1650
Amplifier 1630
DAC/ADC 1610
1620
Waveform database 1600
Power source 150

FIG. 16

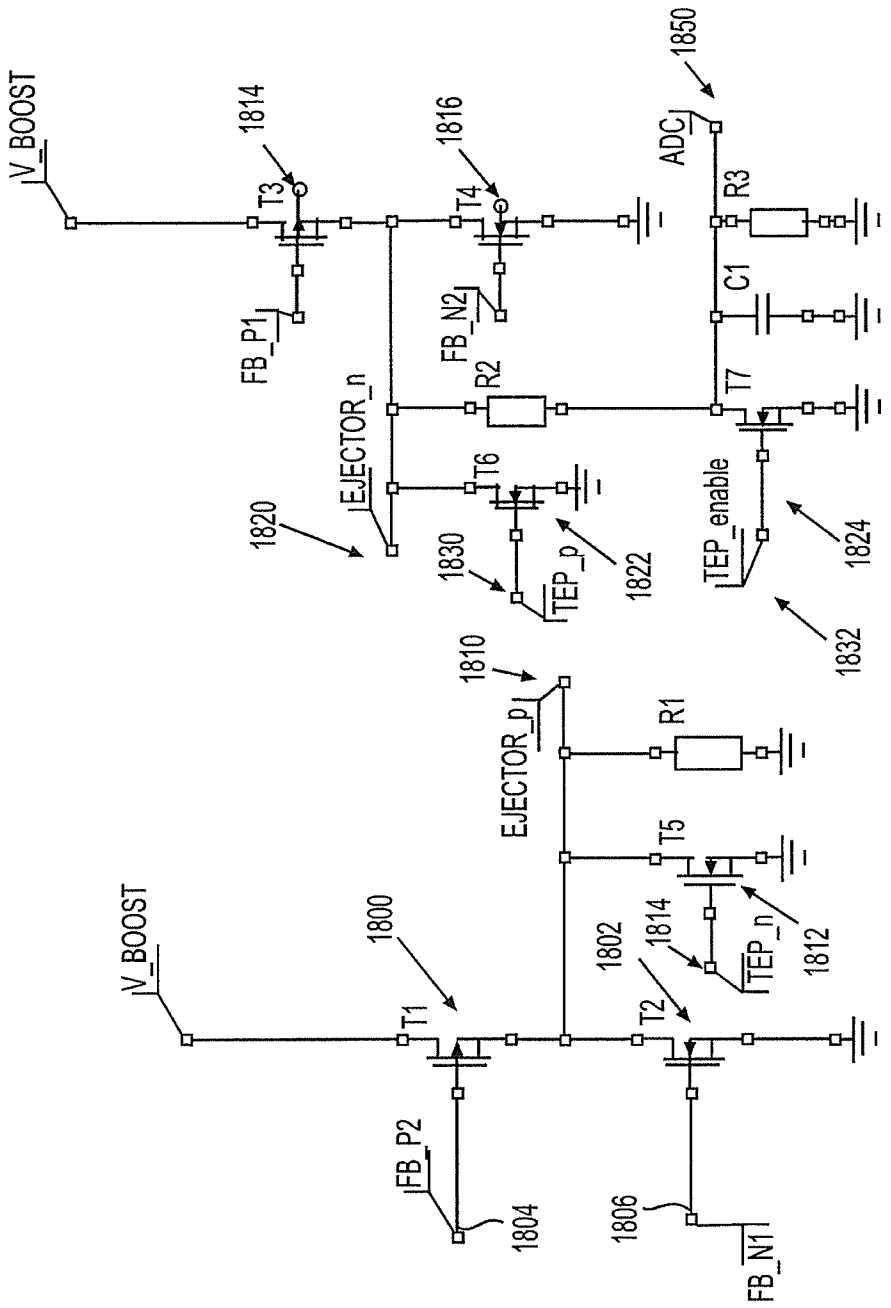
V_BOOST
1814
T3
1816
T4
1850
ADC
R3
C1
FB_P1
FB_N2
R2
T7
EJECTOR_n
T6
1820
1830
TEP_p
1822
TEP_enable
1824
1832
1810
EJECTOR_p
R1
T5
V_BOOST
1800
1802
1814
TEP_n
1812
T1
T2
FB_P2
1804
1806
FB_N1

FIG. 17

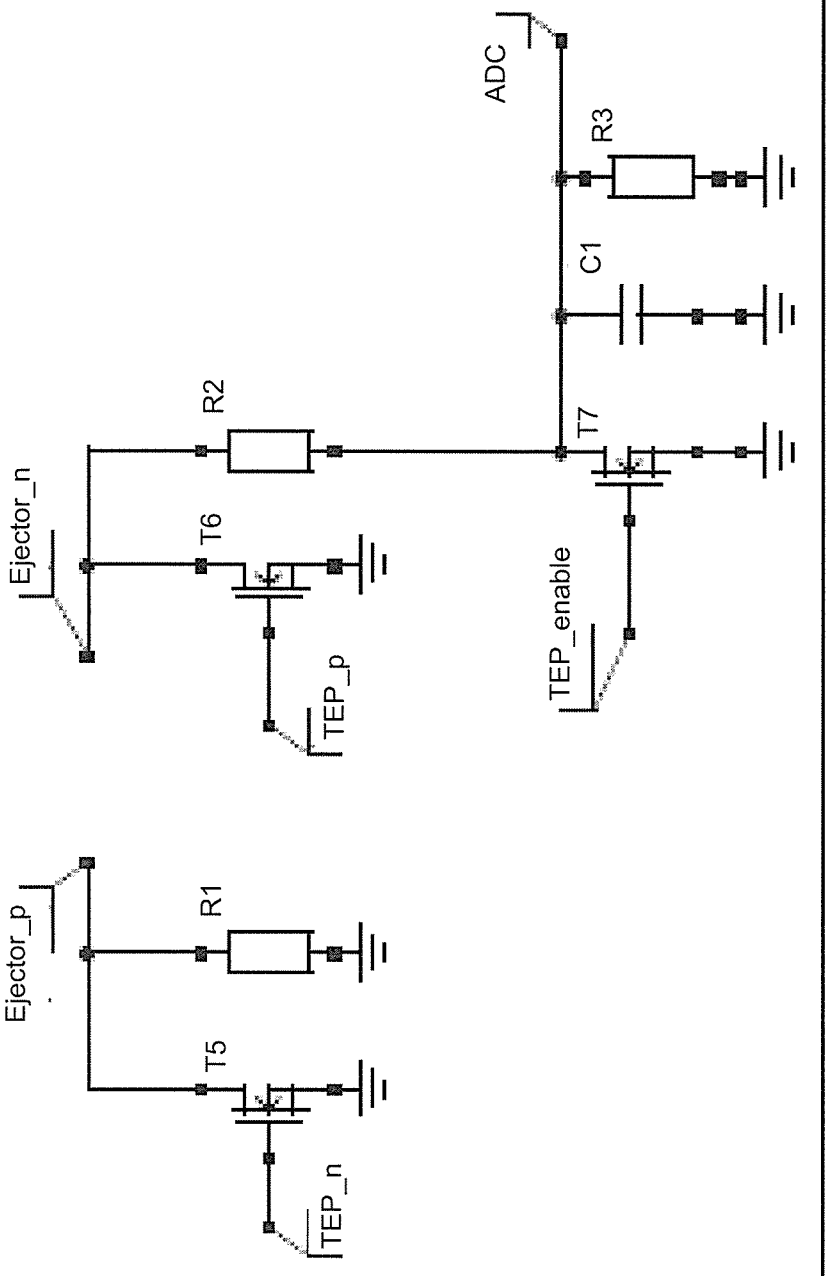
ADC
R3
C1
T7
R2
T6
Ejector_n
TEP_p
TEP_enable
R1
T5
Ejector_p
TEP_n

FIG. 18

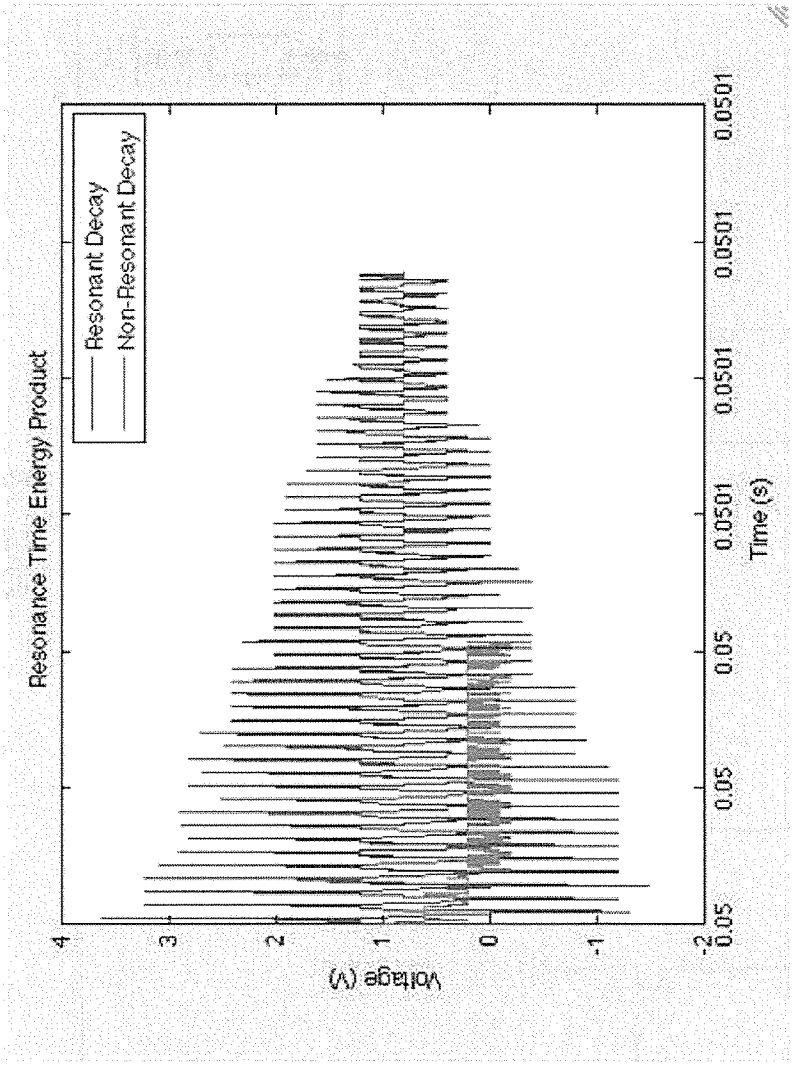
Resonance Time Energy Product
Resonant Decay
Non-Resonant Decay
Voltage (V)
Time (s)
4
3
2
1
0
-1
-2
0.05
0.05
0.0501
0.0501
0.0501
0.0501

FIG. 19

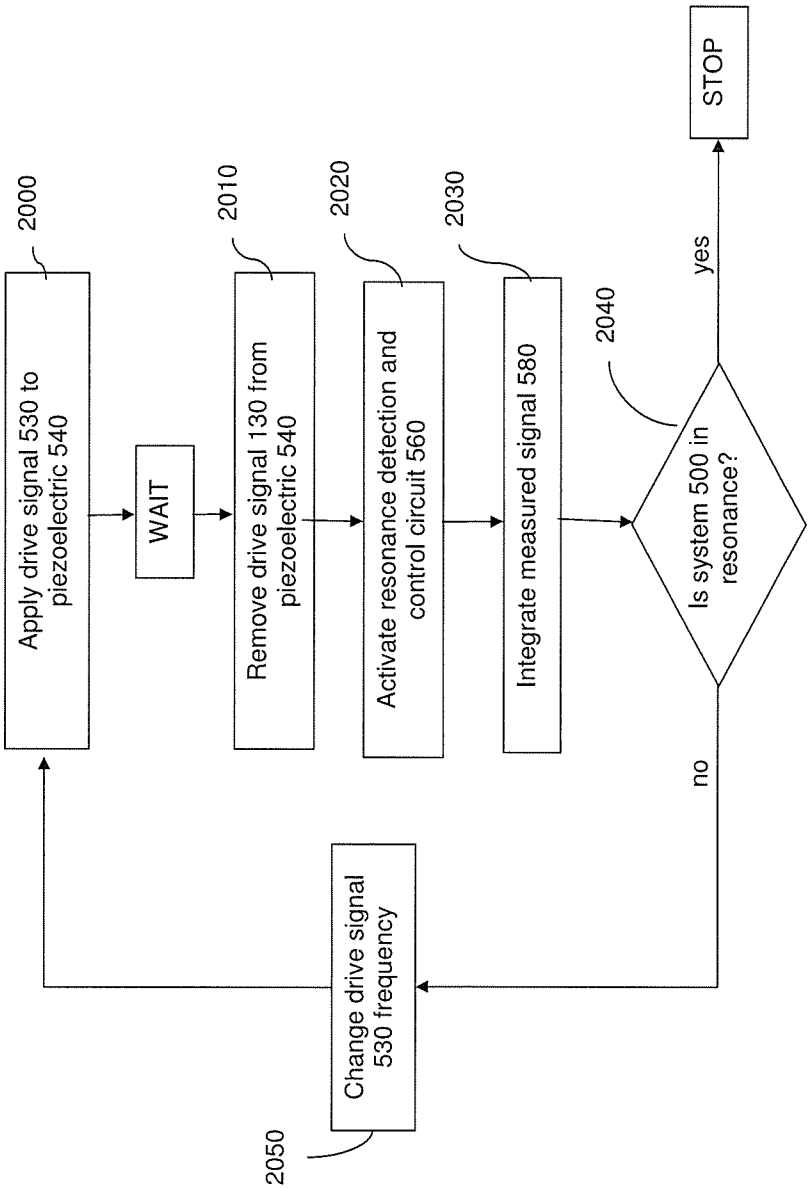
2000
Apply drive signal 530 to piezoelectric 540
WAIT
2010
Remove drive signal 130 from piezoelectric 540
2020
Activate resonance detection and control circuit 560
2030
Integrate measured signal 580
2040
Is system 500 in resonance?
yes
STOP
no
Change drive signal 530 frequency
2050

FIG. 20

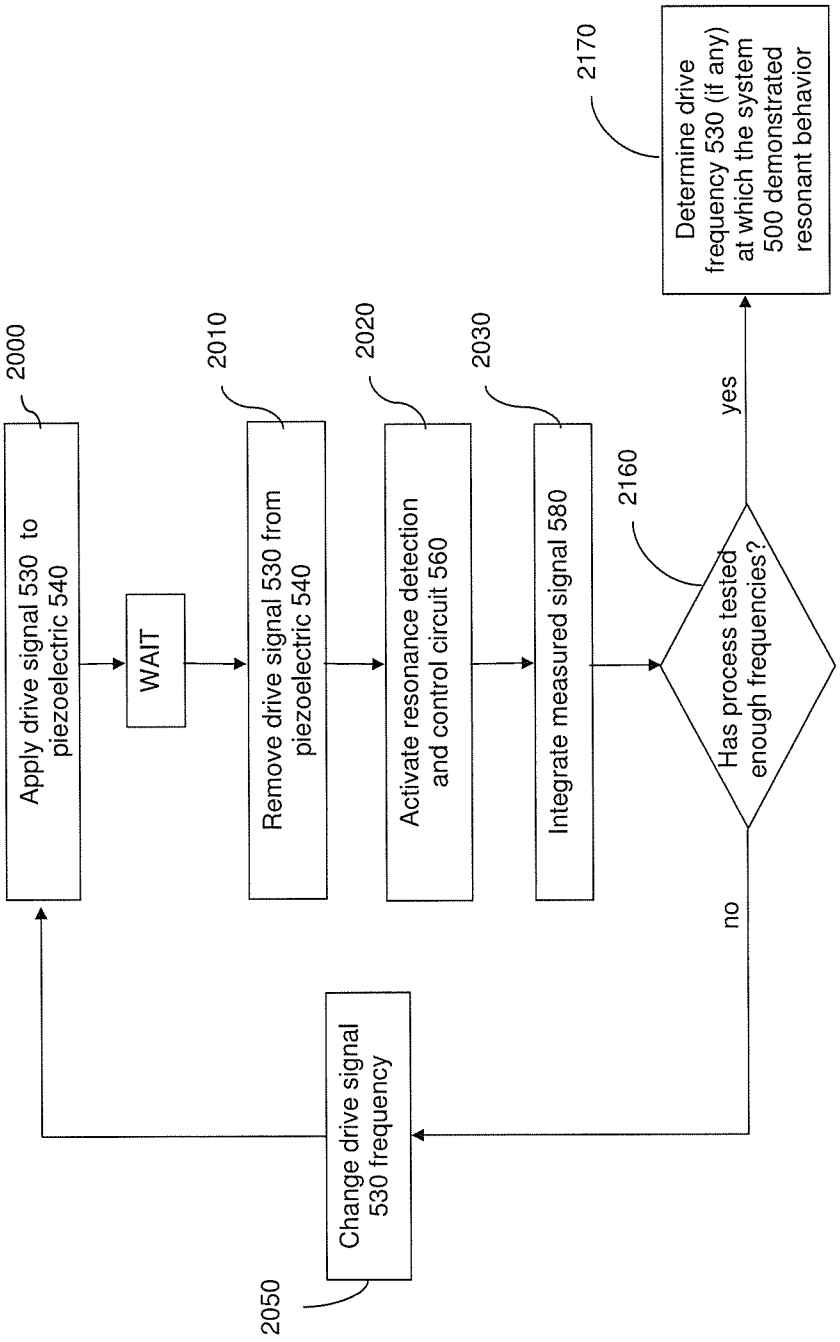
2000
Apply drive signal 530 to piezoelectric 540
WAIT
2010
Remove drive signal 530 from piezoelectric 540
2020
Activate resonance detection and control circuit 560
2030
Integrate measured signal 580
2160
Has process tested enough frequencies?
yes
2170
Determine drive frequency 530 (if any) at which the system 500 demonstrated resonant behavior
no
2050
Change drive signal 530 frequency

FIG. 21

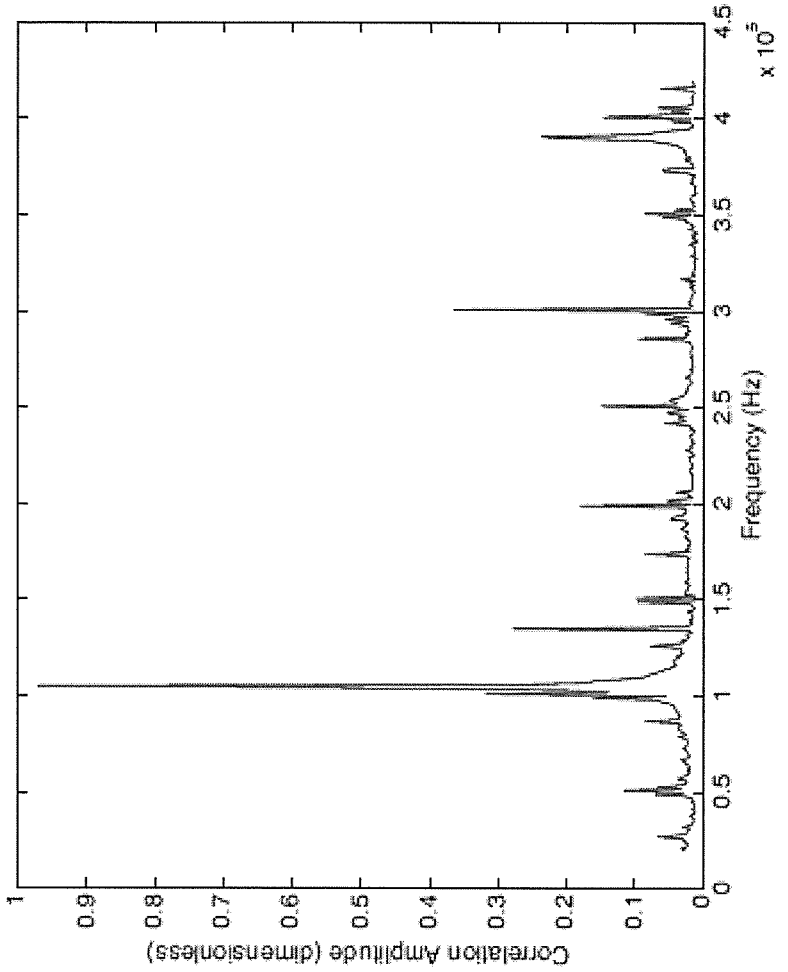
Correlation Amplitude (dimensionless)
0
0.1
0.2
0.3
0.4
0.5
0.6
0.7
0.8
0.9
1
0
0.5
1
1.5
2
2.5
3
3.5
4
4.5
Frequency (Hz)
x 10^-5

FIG. 22

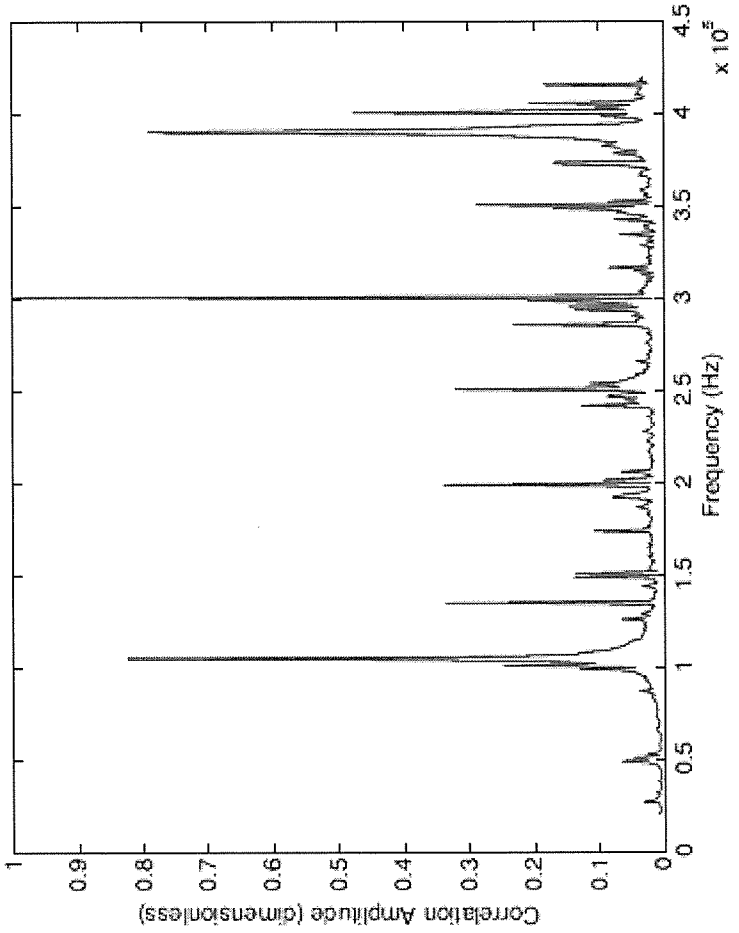
Correlation Amplitude (dimensionless)
Frequency (Hz)
x 10^2
0
0.1
0.2
0.3
0.4
0.5
0.6
0.7
0.8
0.9
1
0.5
1
1.5
2
2.5
3
3.5
4
4.5

FIG. 23

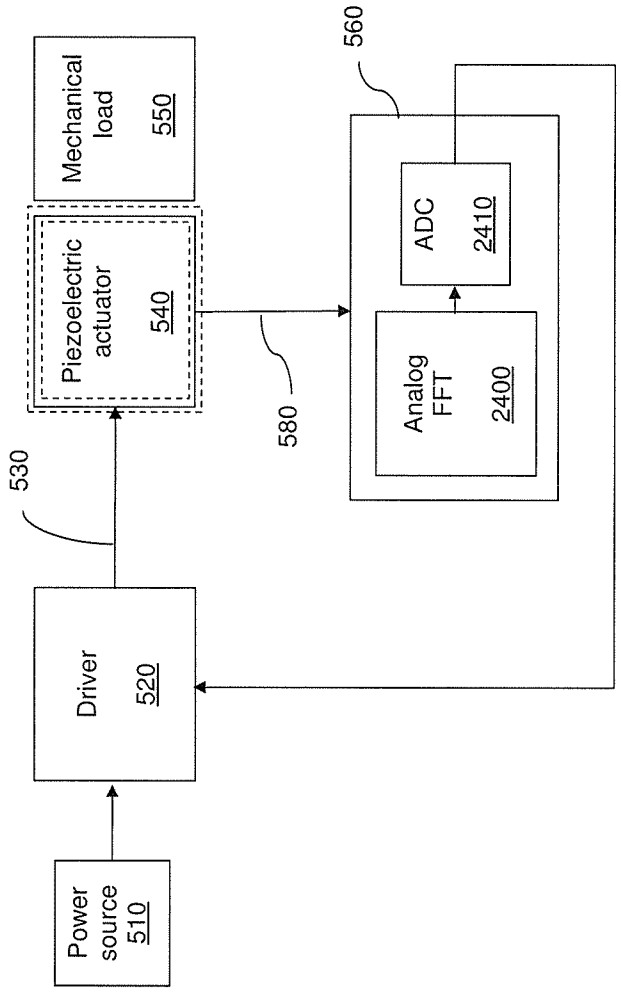
Power source 510
Driver 520
530
Piezoelectric actuator 540
Mechanical load 550
580
560
Analog FFT 2400
ADC 2410

FIG. 24

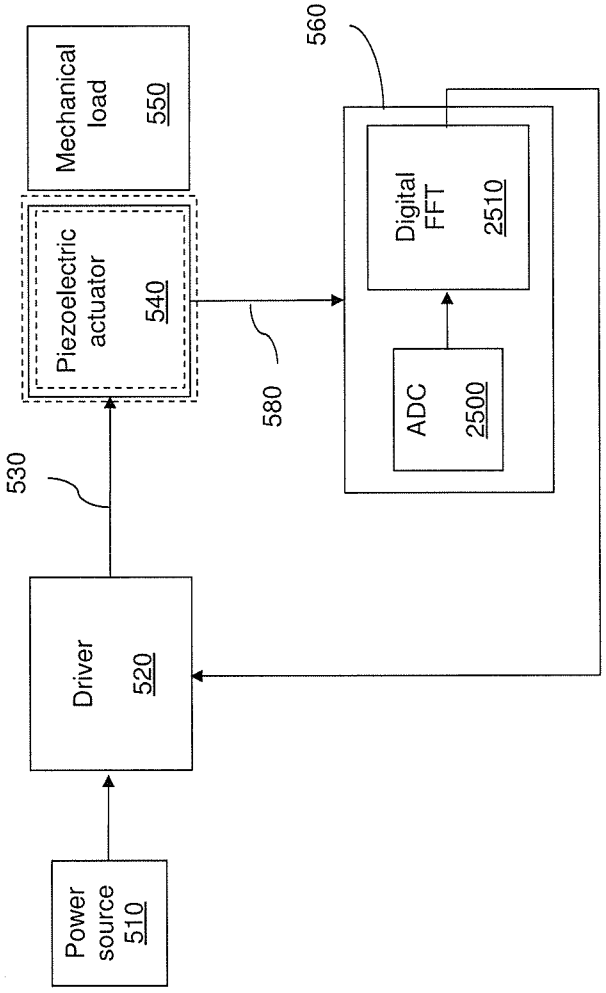
Power source 510
Driver 520
530
Piezoelectric actuator 540
Mechanical load 550
580
560
ADC 2500
Digital FFT 2510

FIG. 25

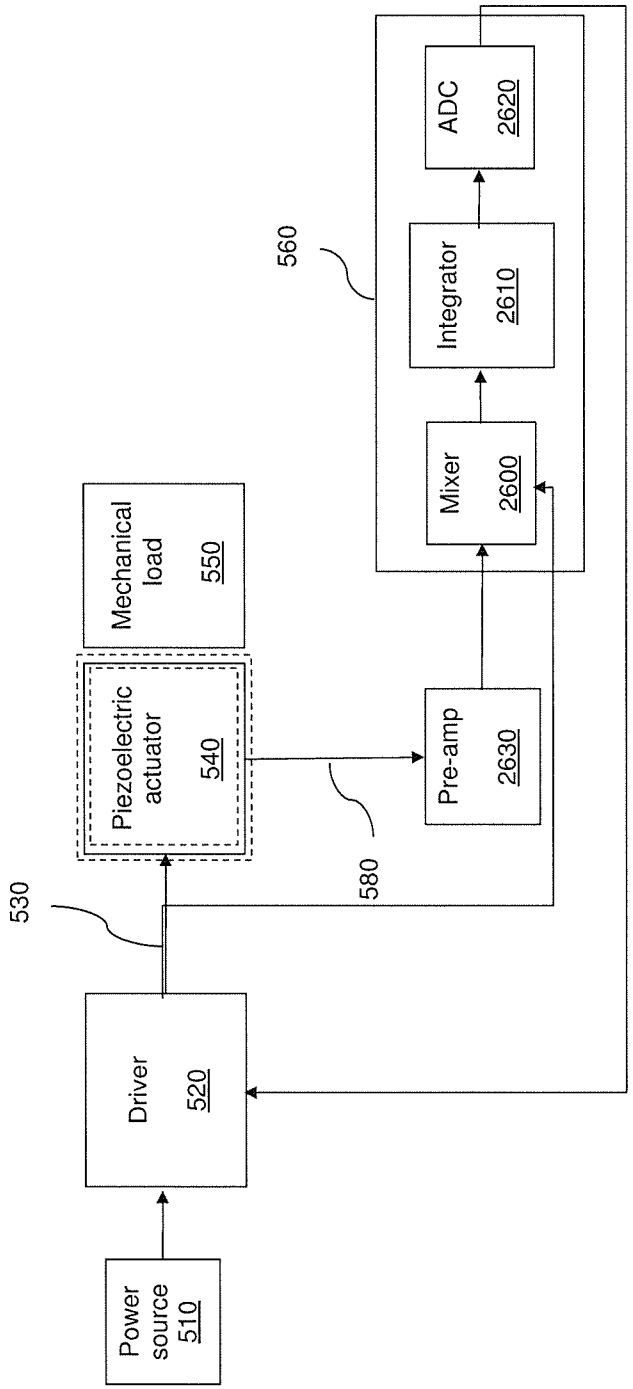
Power source 510
Driver 520
530
Piezoelectric actuator 540
Mechanical load 550
580
560
Pre-amp 2630
Mixer 2600
Integrator 2610
ADC 2620

FIG. 26

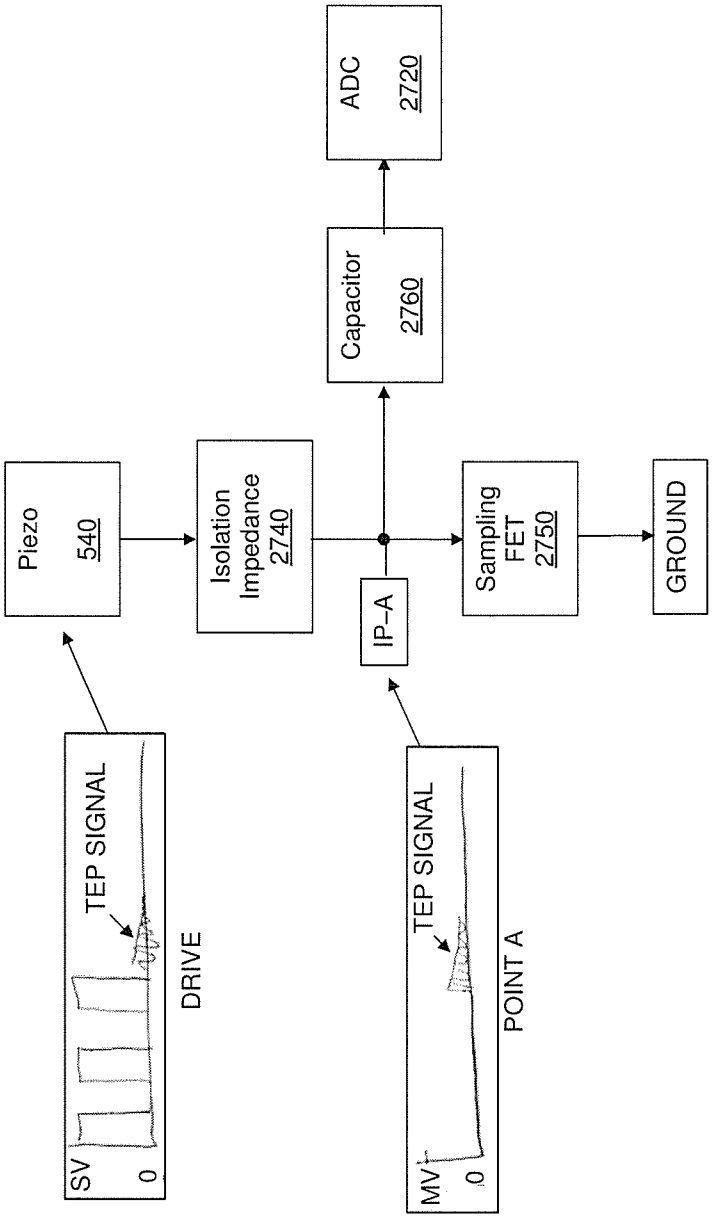
ADC
2720
Capacitor
2760
Piezo
540
Isolation
Impedance
2740
Sampling
FET
2750
GROUND
IP–A
TEP SIGNAL
SV
0
DRIVE
TEP SIGNAL
MV
0
POINT A

FIG. 27

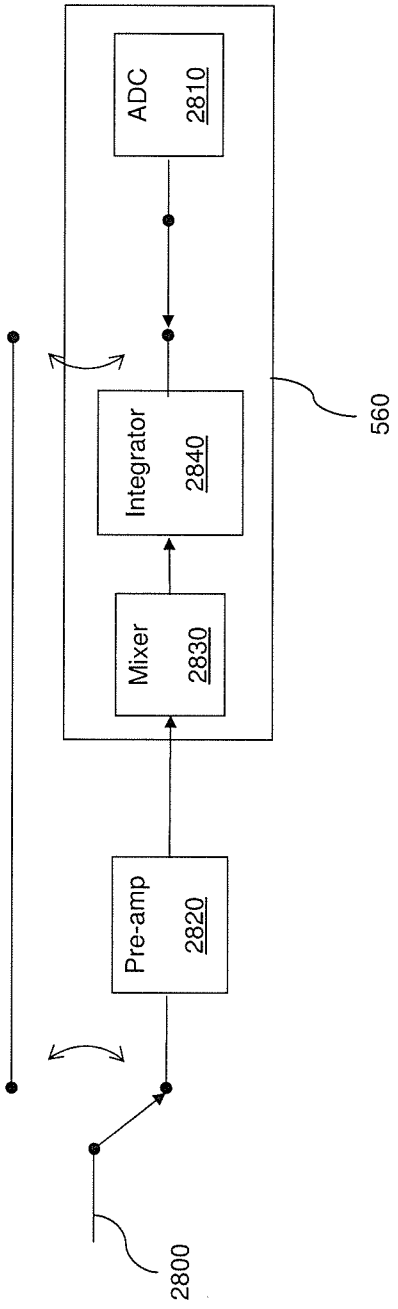

FIG. 28

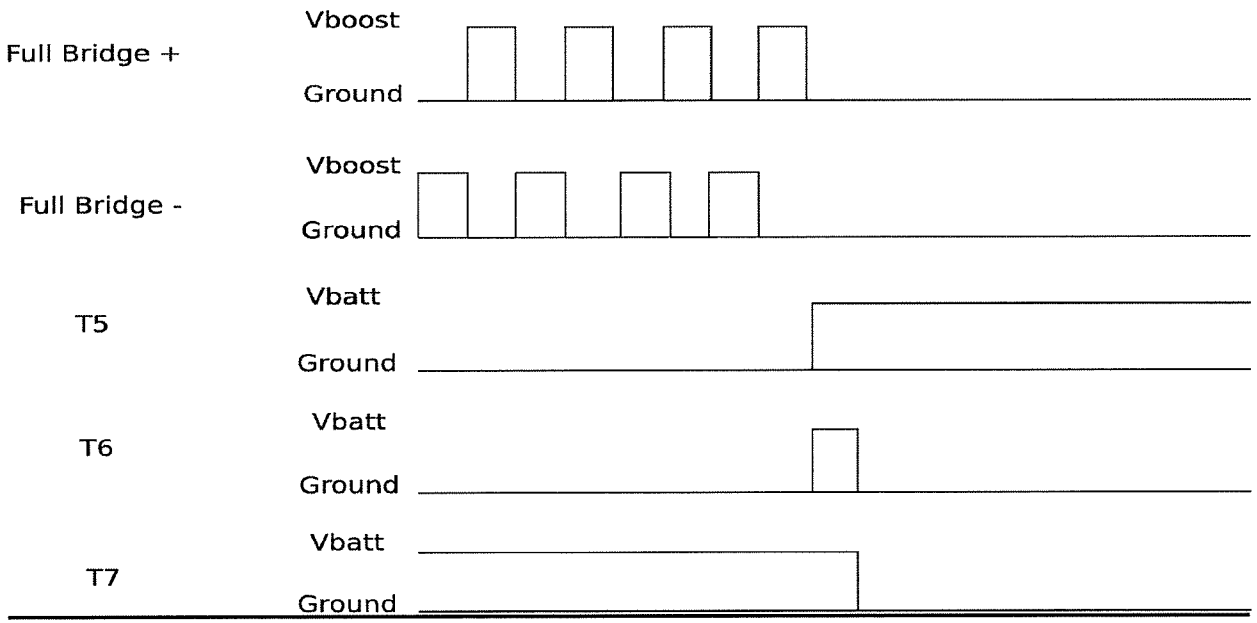
Full Bridge +
Vboost
Ground
Full Bridge -
Vboost
Ground
T5
Vbatt
Ground
T6
Vbatt
Ground
T7
Vbatt
Ground

FIG. 29

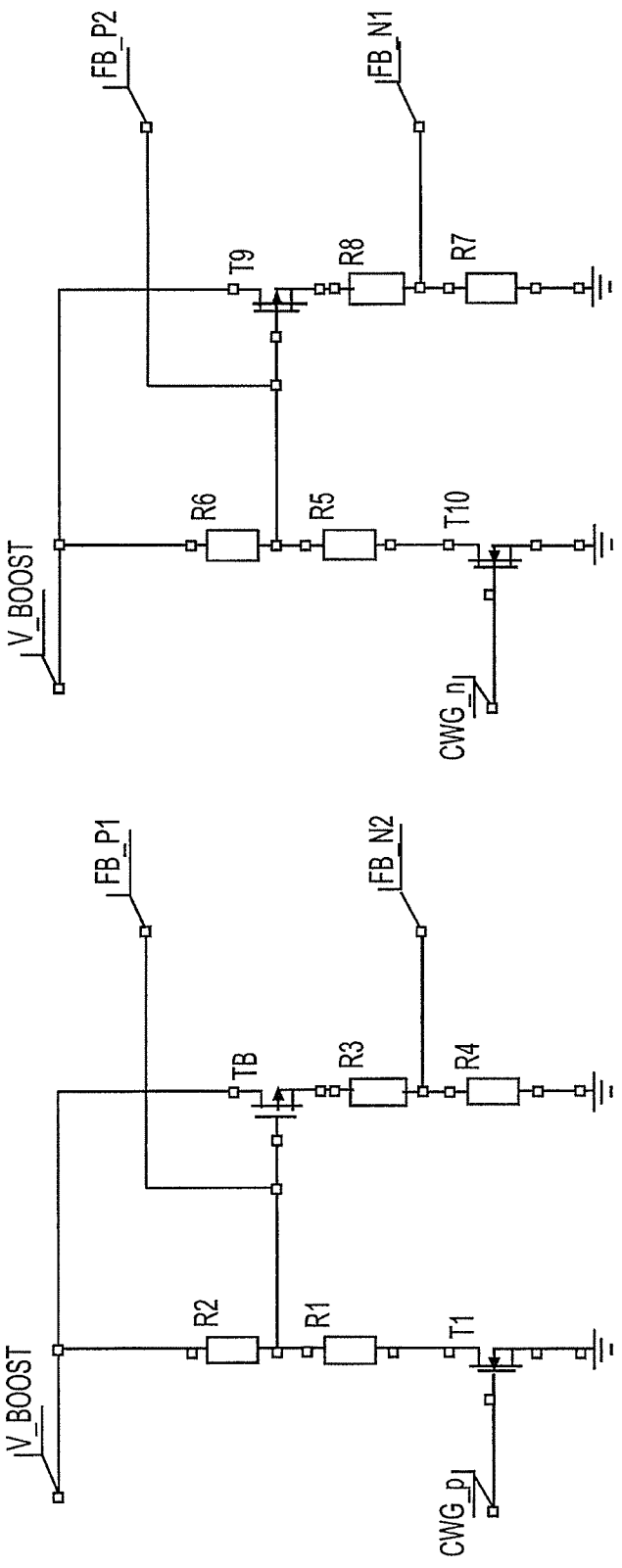
FB_P2
FB_N1
T9
R8
R7
R6
R5
T10
V_BOOST
CWG_n
FB_P1
FB_N2
TB
R3
R4
R2
R1
T1
V_BOOST
CWG_p

FIG. 30

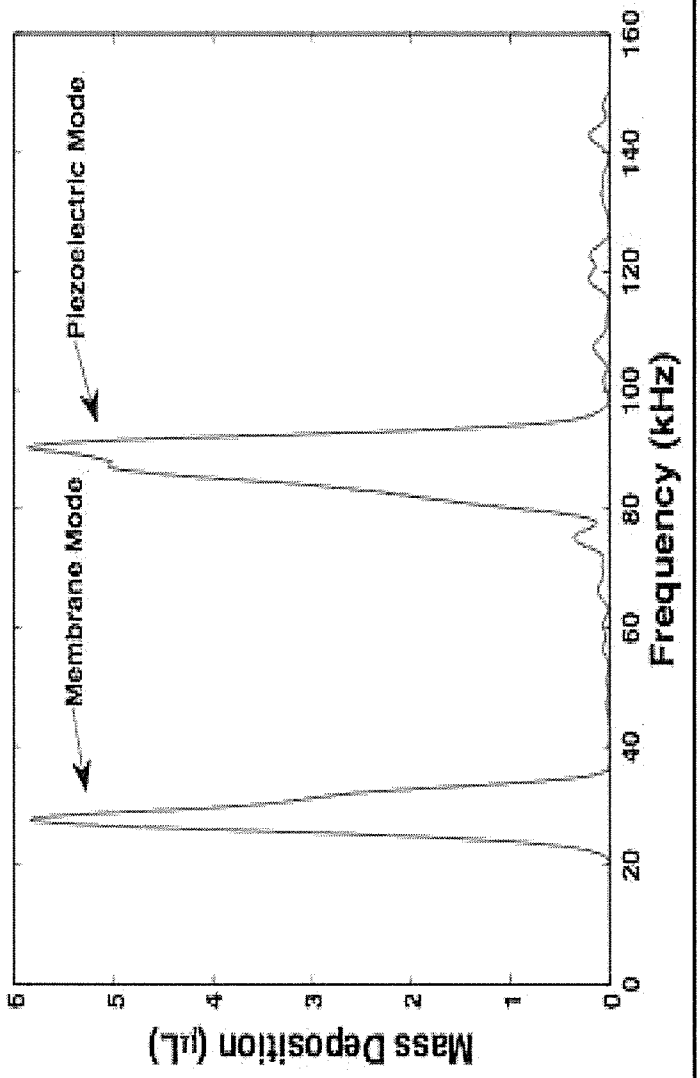
Mass Deposition (μL)
0
1
2
3
4
5
6
Frequency (kHz)
0
20
40
60
80
100
120
140
160
Membrane Mode
Piezoelectric Mode

FIG. 31

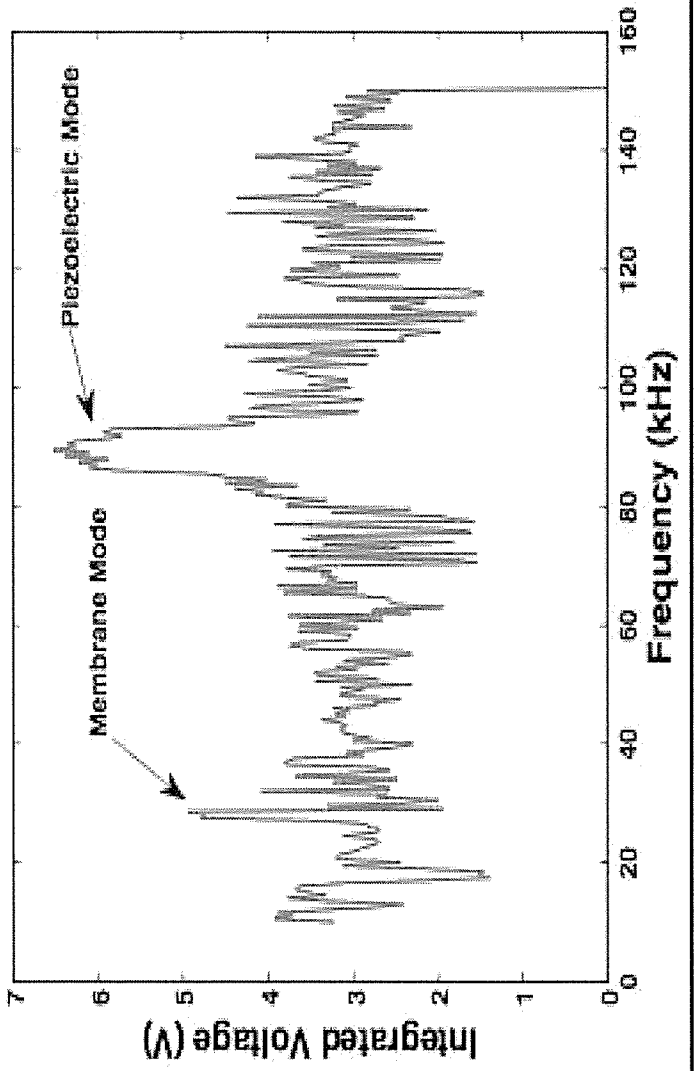
Piezoelectric Mode
Membrane Mode
Integrated Voltage (V)
Frequency (kHz)
0
1
2
3
4
5
6
7
0
20
40
60
80
100
120
140
160

FIG. 32

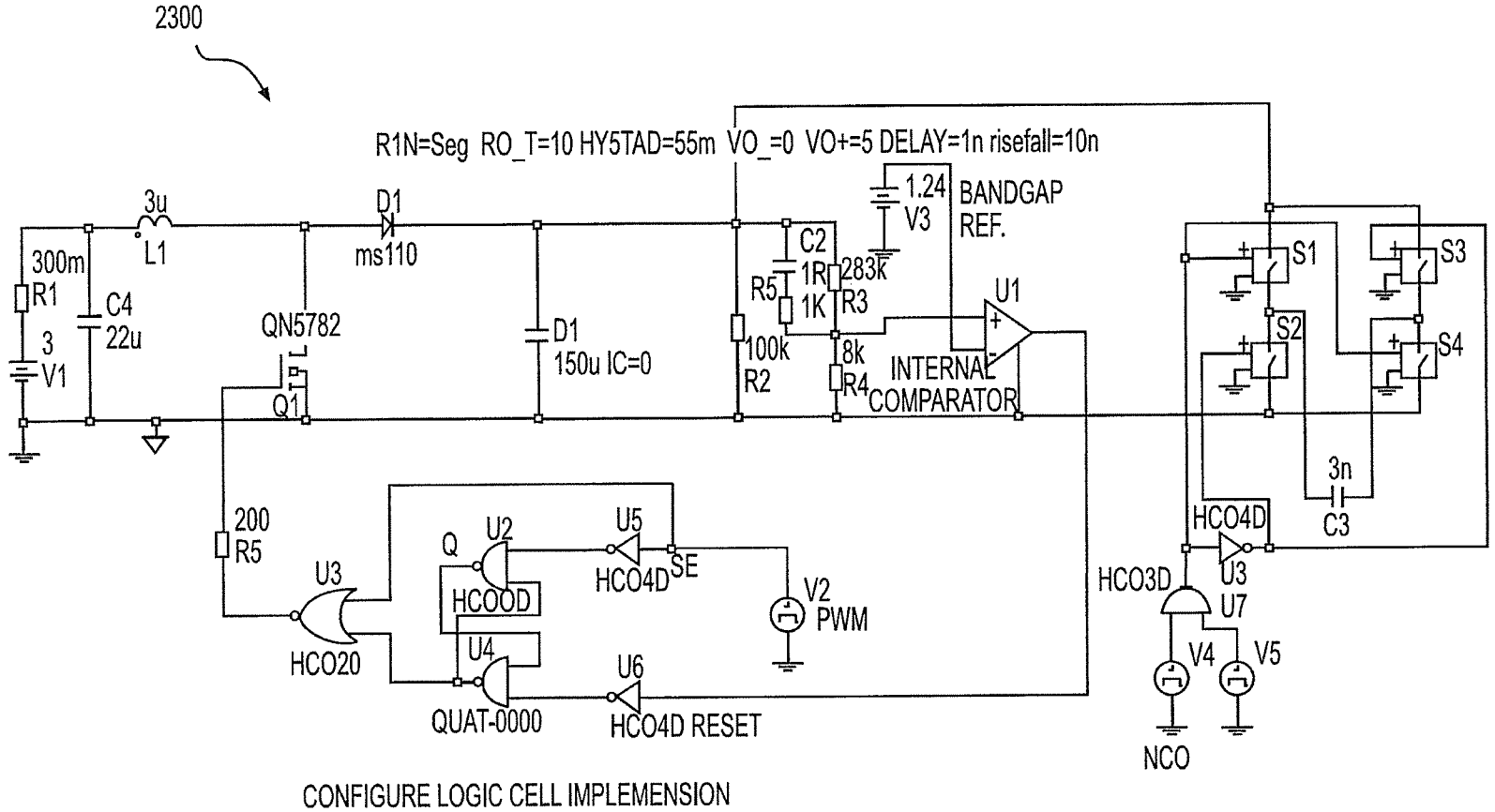

CONFIGURE LOGIC CELL IMPLEMENSION

FIG. 33

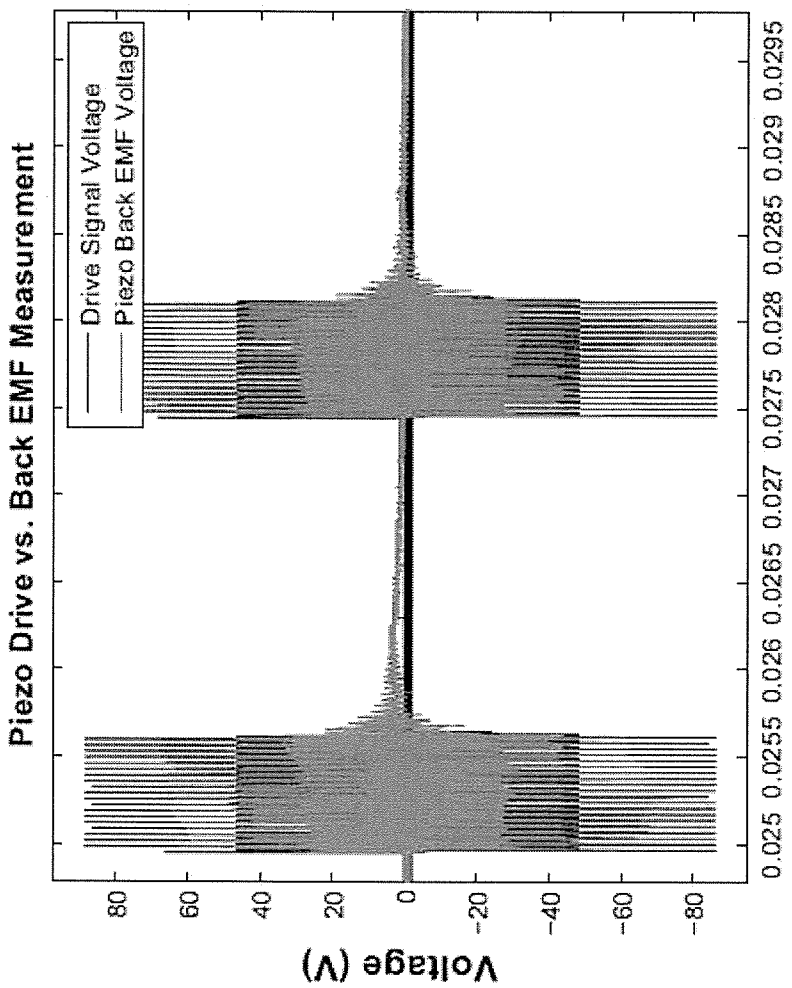
Piezo Drive vs. Back EMF Measurement
Drive Signal Voltage
Piezo Back EMF Voltage
Voltage (V)
80
60
40
20
0
-20
-40
-60
-80
0.025
0.0255
0.026
0.0265
0.027
0.0275
0.028
0.0285
0.029
0.0295
Time (s)

FIG. 34A

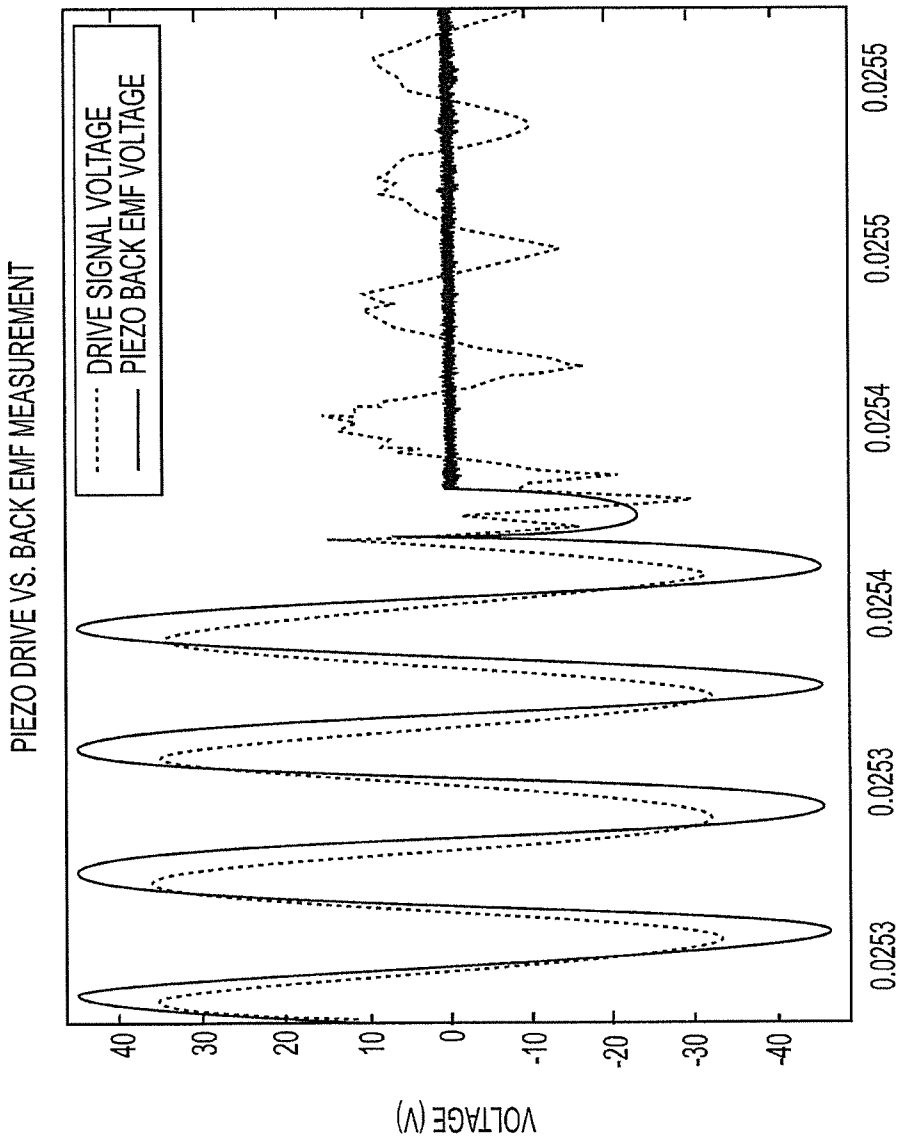
PIEZO DRIVE VS. BACK EMF MEASUREMENT
DRIVE SIGNAL VOLTAGE
PIEZO BACK EMF VOLTAGE
VOLTAGE (V)
40
30
20
10
0
-10
-20
-30
-40
0.0253
0.0253
0.0254
0.0254
0.0255
0.0255
TIME(s)

FIG. 34B

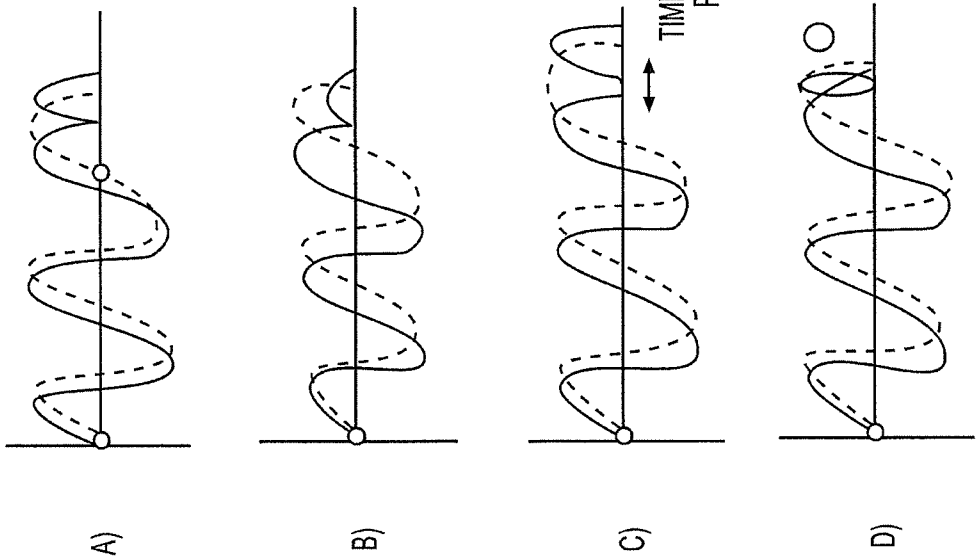

FIG. 35

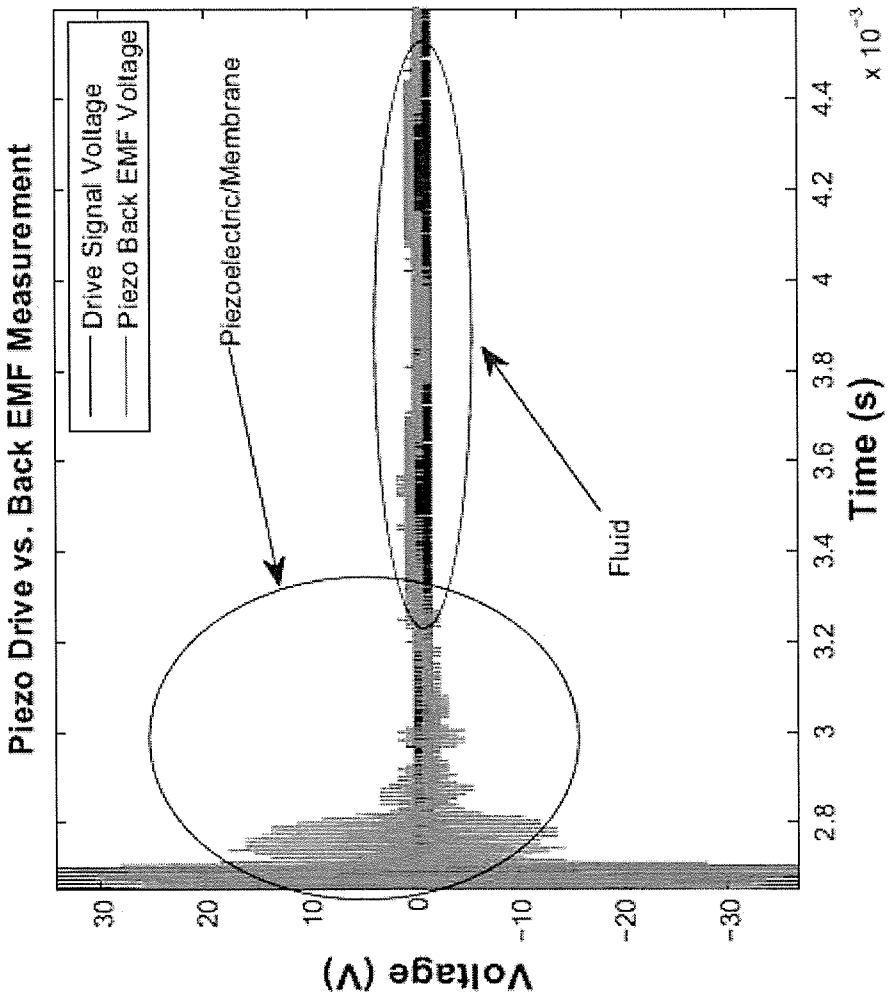
Piezo Drive vs. Back EMF Measurement
Drive Signal Voltage
Piezo Back EMF Voltage
Piezoelectric/Membrane
Fluid
Voltage (V)
Time (s)
x 10^-3
30
20
10
0
-10
-20
-30
2.8
3
3.2
3.4
3.6
3.8
4
4.2
4.4

FIG. 36

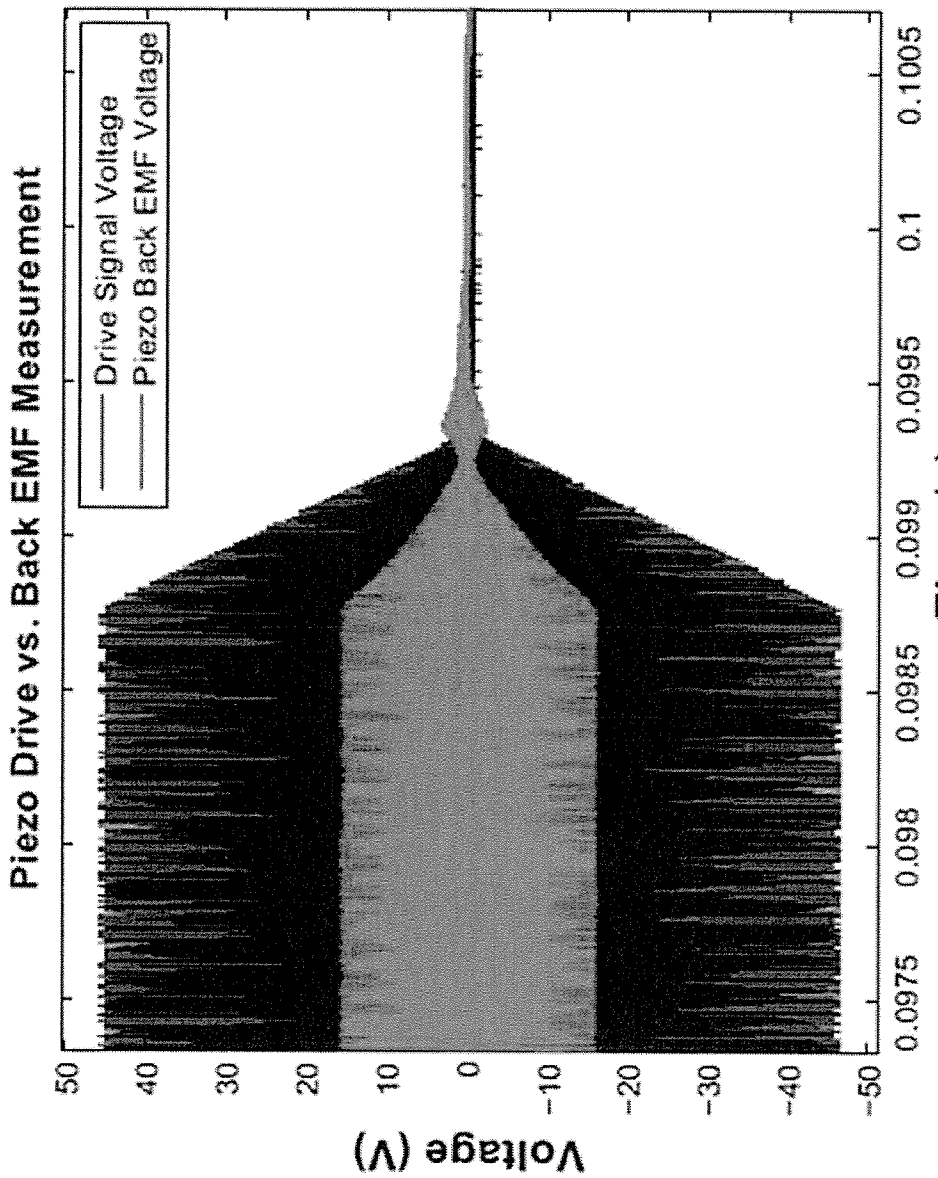
Piezo Drive vs. Back EMF Measurement
Drive Signal Voltage
Piezo Back EMF Voltage
Voltage (V)
50
40
30
20
10
0
−10
−20
−30
−40
−50
0.0975
0.098
0.0985
0.099
0.0995
0.1
0.1005
Time (s)

FIG. 37

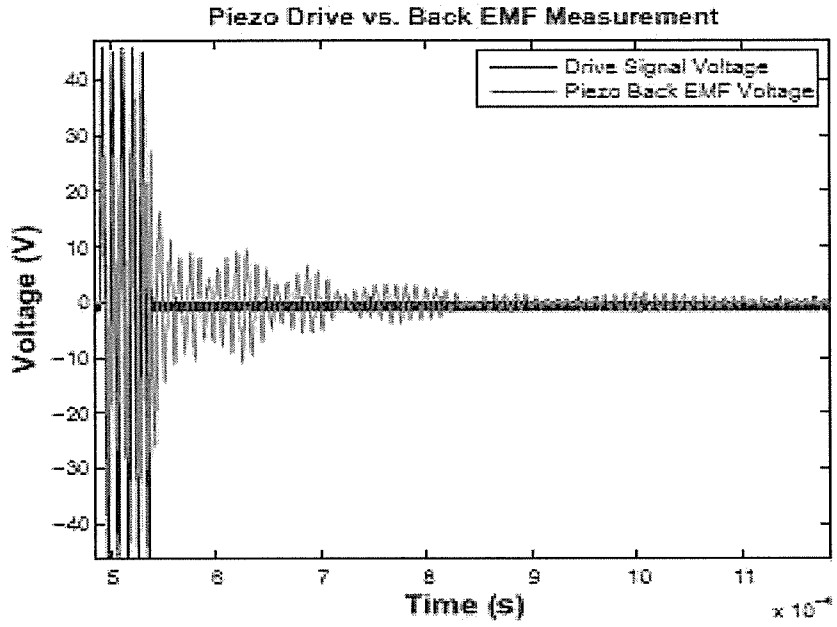

FIG. 38A

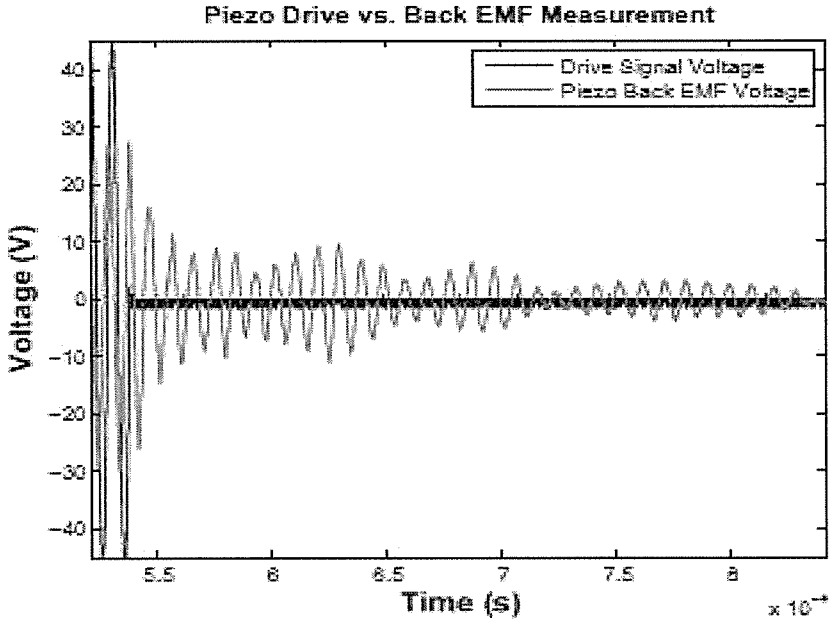

FIG. 38B

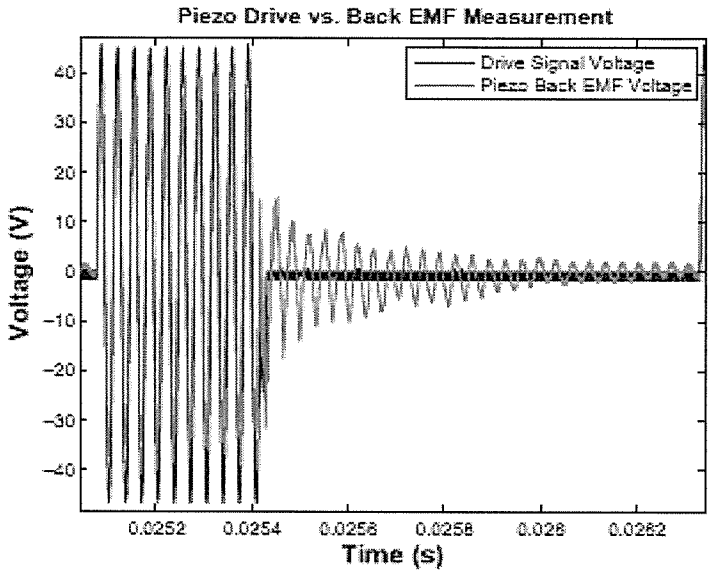

FIG. 39A

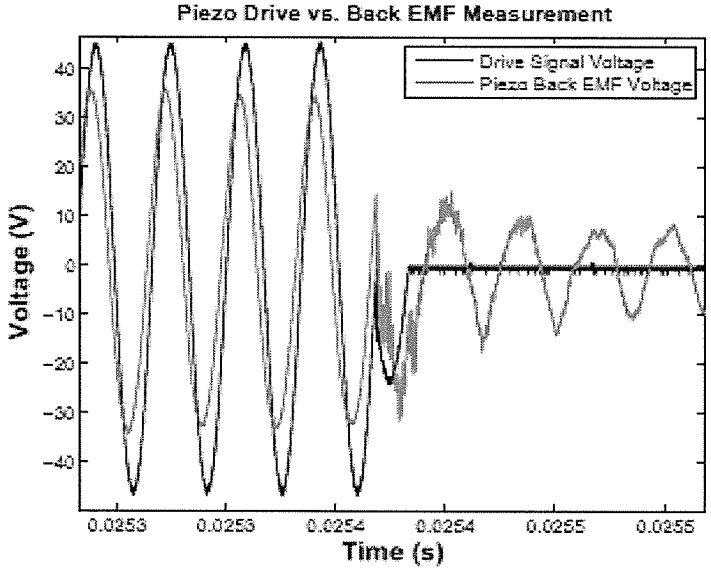

FIG. 39B

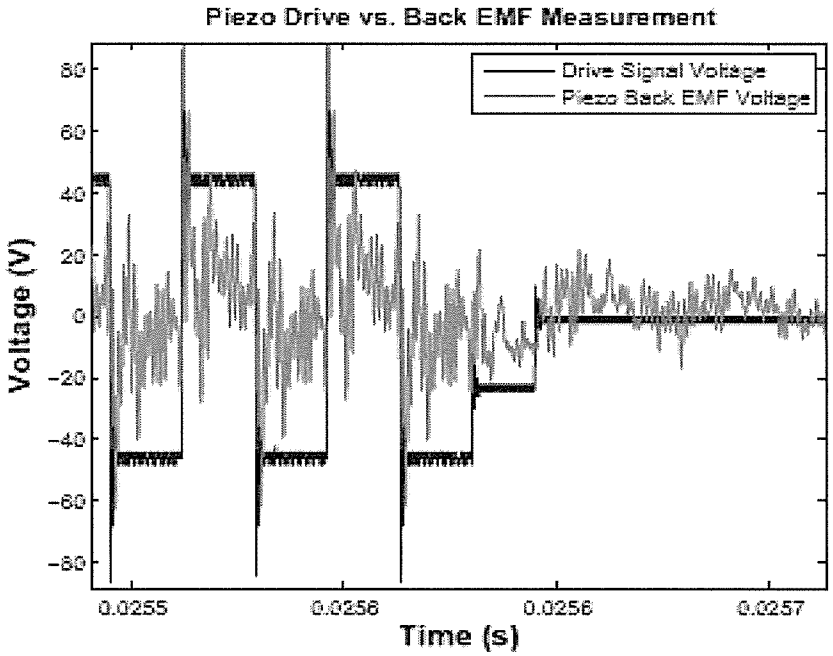
Piezo Drive vs. Back EMF Measurement
Drive Signal Voltage
Piezo Back EMF Voltage
Voltage (V)
80
60
40
20
0
-20
-40
-60
-80
0.0255
0.0256
0.0256
0.0257
Time (s)

FIG. 40

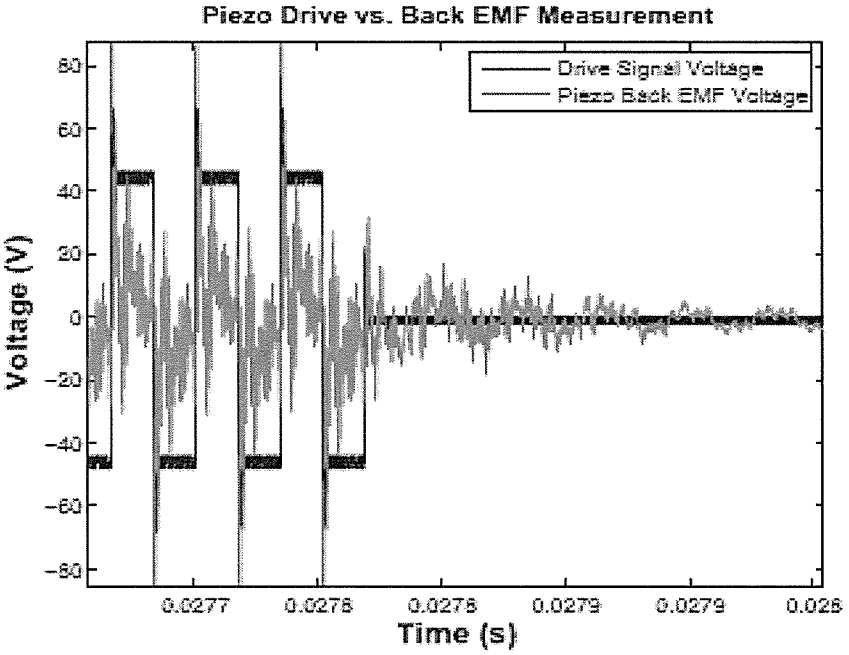
Piezo Drive vs. Back EMF Measurement
Drive Signal Voltage
Piezo Back EMF Voltage
Voltage (V)
80
60
40
20
0
-20
-40
-60
-80
0.0277
0.0278
0.0278
0.0279
0.0279
0.028
Time (s)

FIG. 41

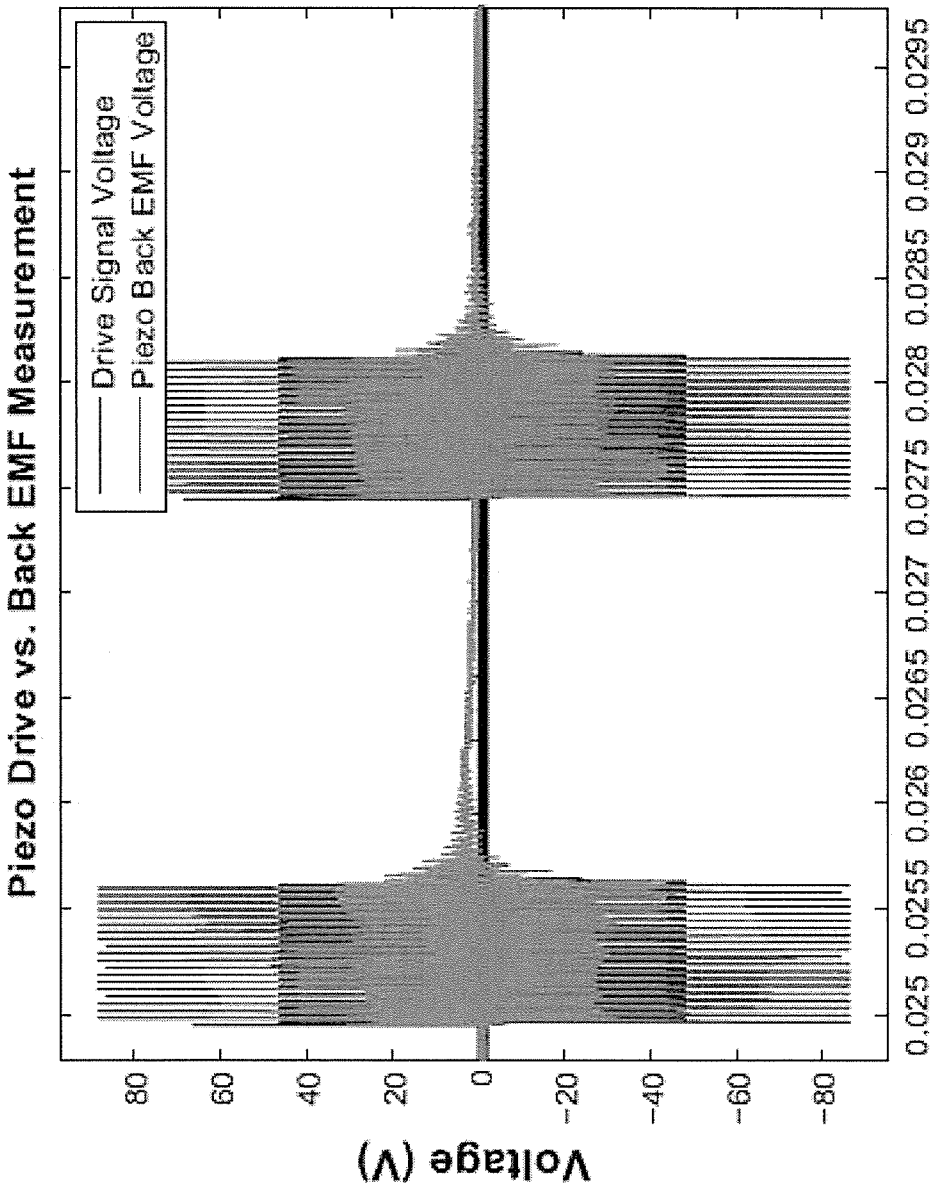
Piezo Drive vs. Back EMF Measurement
Drive Signal Voltage
Piezo Back EMF Voltage
Voltage (V)
80
60
40
20
0
−20
−40
−60
−80
0.025
0.0255
0.026
0.0265
0.027
0.0275
0.028
0.0285
0.029
0.0295
Time (s)

FIG. 42

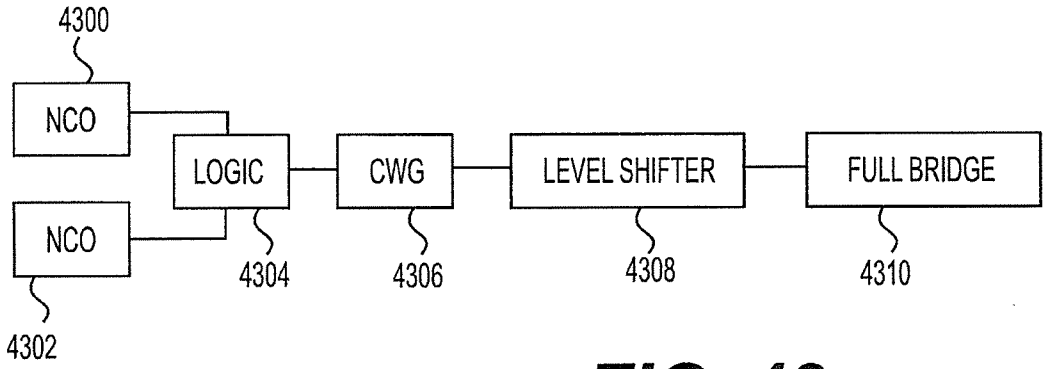
4300
NCO
NCO
LOGIC
CWG
LEVEL SHIFTER
FULL BRIDGE
4302
4304
4306
4308
4310

FIG. 43

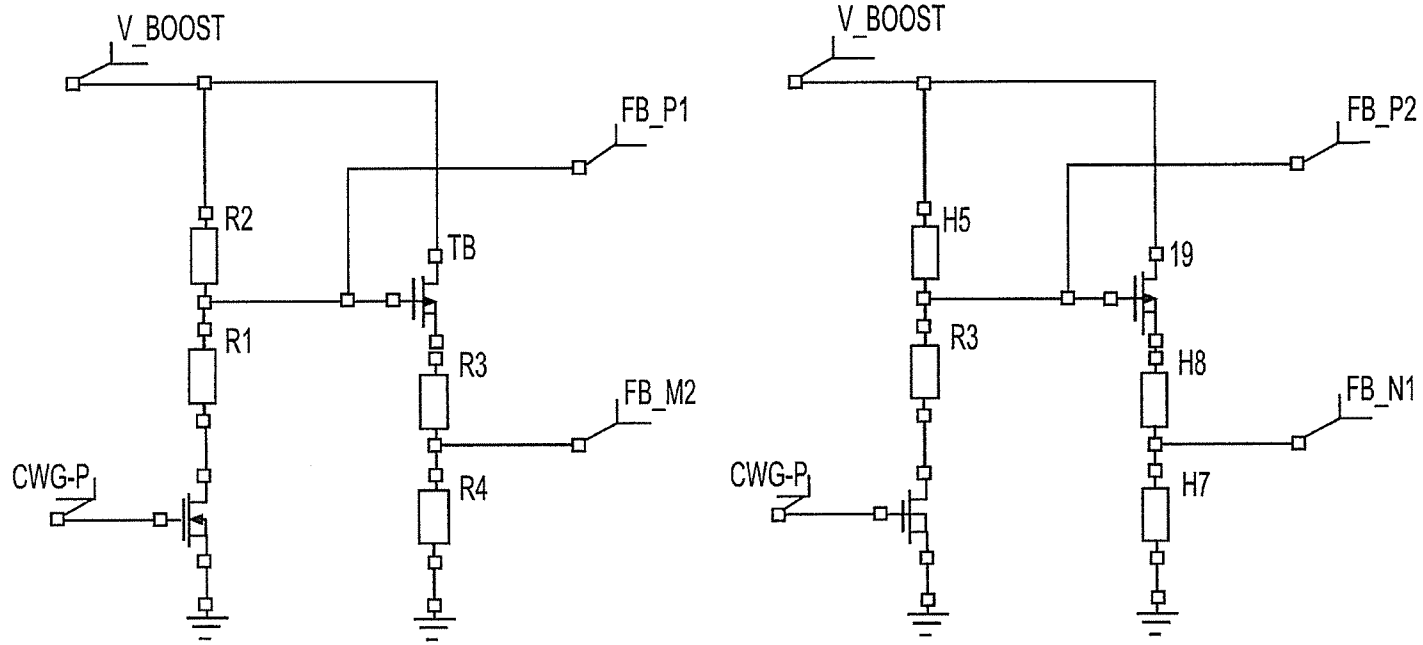
V_BOOST
FB_P1
R2
TB
R1
R3
FB_M2
CWG-P
R4
V_BOOST
FB_P2
H5
19
R3
H8
FB_N1
CWG-P
H7

FIG. 44

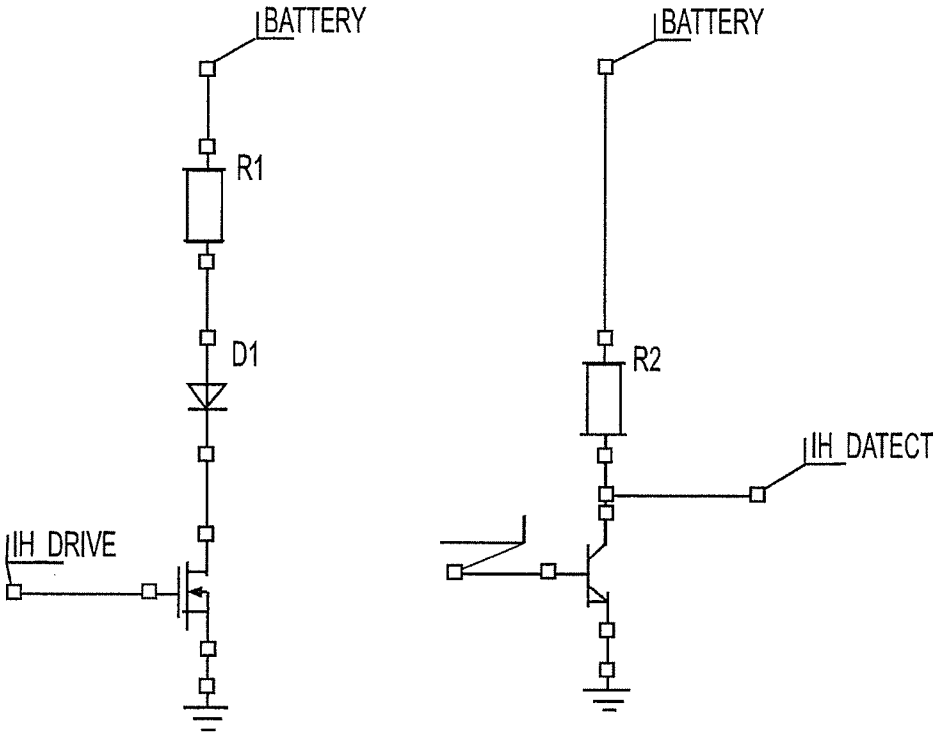
BATTERY
R1
D1
IH_DRIVE
BATTERY
R2
IH_DATECT

FIG. 45

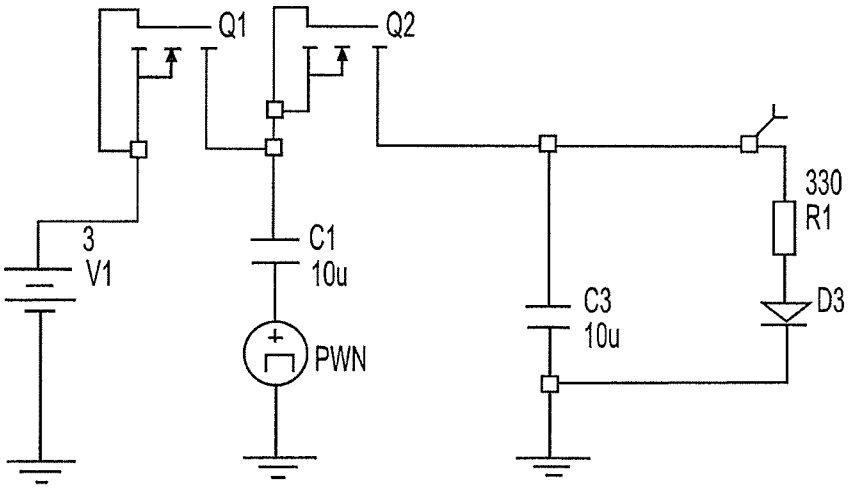
Q1
Q2
3
V1
C1
10u
PWN
C3
10u
330
R1
D3

FIG. 46

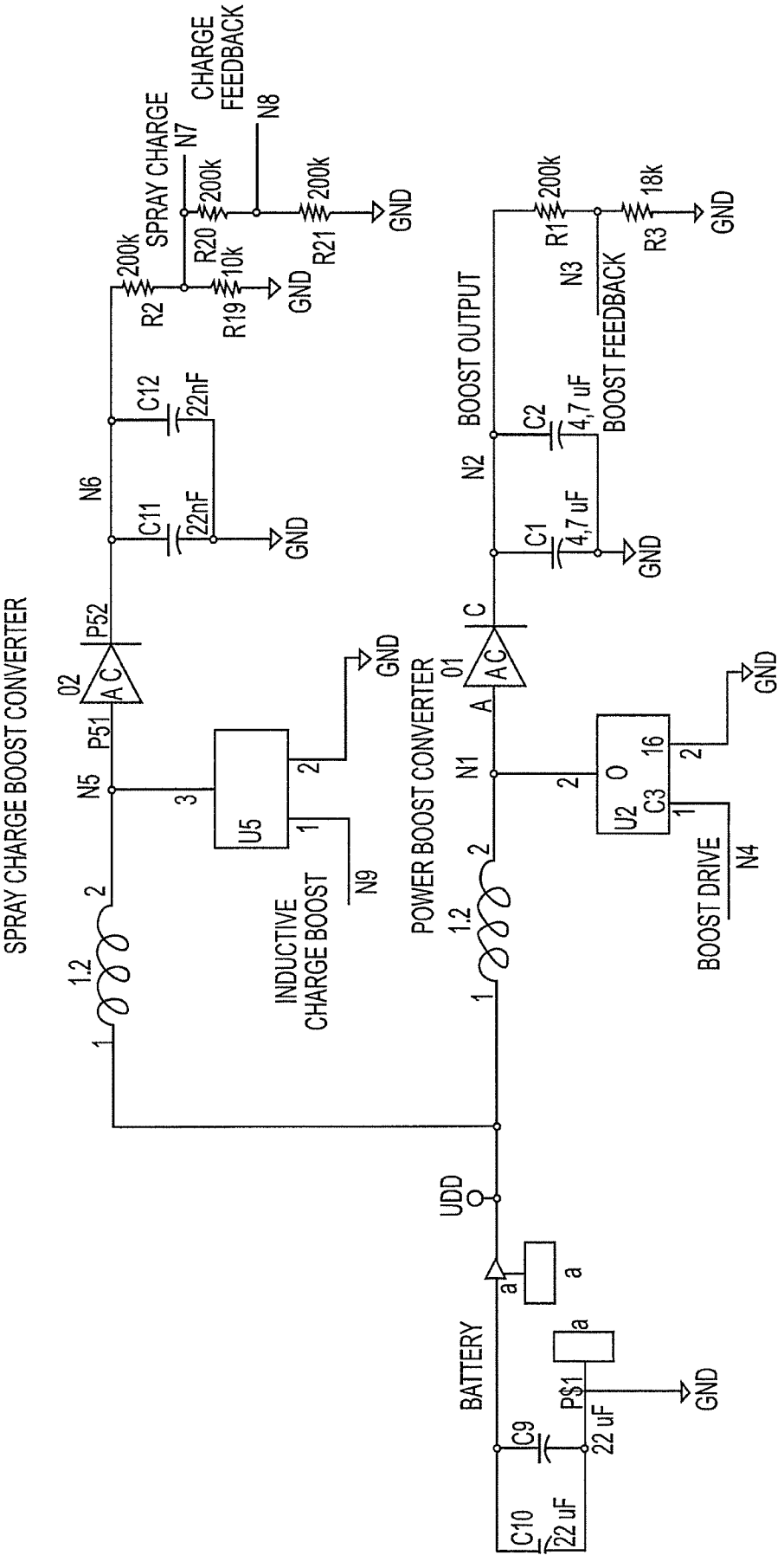
SPRAY CHARGE BOOST CONVERTER
POWER BOOST CONVERTER
INDUCTIVE CHARGE BOOST
BOOST DRIVE
BOOST OUTPUT
BOOST FEEDBACK
SPRAY CHARGE
CHARGE FEEDBACK
BATTERY
UDD
GND
200k
10k
18k
22nF
4,7 uF
22 uF
N1
N2
N3
N4
N5
N6
N7
N8
N9
P52
P51
P$1
R1
R2
R3
R19
R20
R21
C1
C2
C3
C9
C10
C11
C12
U2
U5

FIG. 47

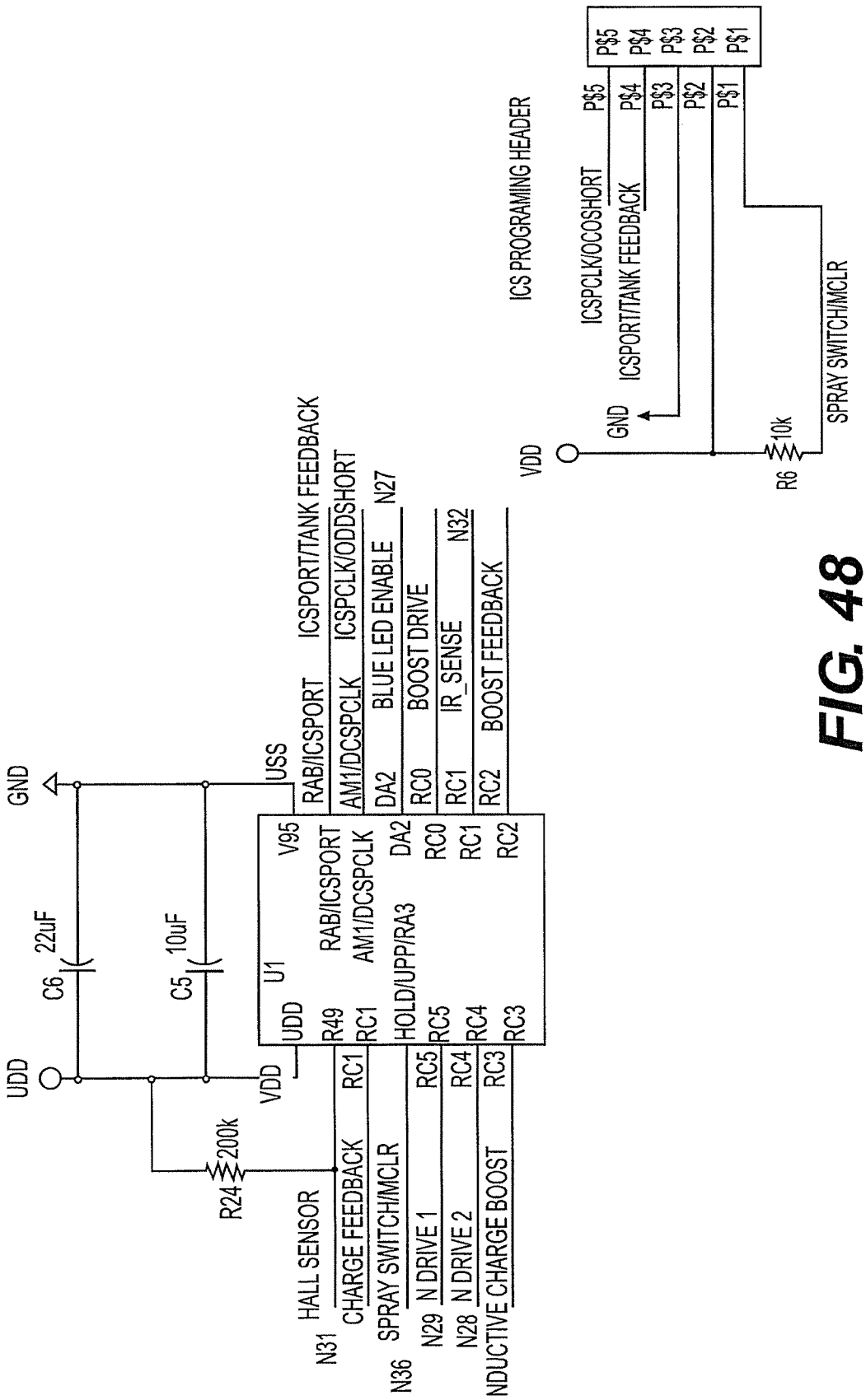
UDD
GND
C6
22uF
C5
10uF
R24
200k
VDD
U1
USS
V95
UDD
R49
RC1
HOLD/UPP/RA3
RC5
RC4
RC3
RAB/ICSPORT
AM1/DCSPCLK
DA2
RC0
RC1
RC2
RAB/ICSPORT
ICSPORT/TANK FEEDBACK
AM1/DCSPCLK
ICSPCLK/ODDSHORT
DA2
BLUE LED ENABLE
N27
RC0
BOOST DRIVE
RC1
IR_SENSE
N32
RC2
BOOST FEEDBACK
HALL SENSOR
N31
CHARGE FEEDBACK
RC1
SPRAY SWITCH/MCLR
N36
N DRIVE 1
RC5
N29
N DRIVE 2
RC4
NDUCTIVE CHARGE BOOST
RC3
ICS PROGRAMING HEADER
VDD
GND
ICSPCLK/OCOSHORT
ICSPORT/TANK FEEDBACK
P$5
P$4
P$3
P$2
P$1
R6
10k
SPRAY SWITCH/MCLR

FIG. 48

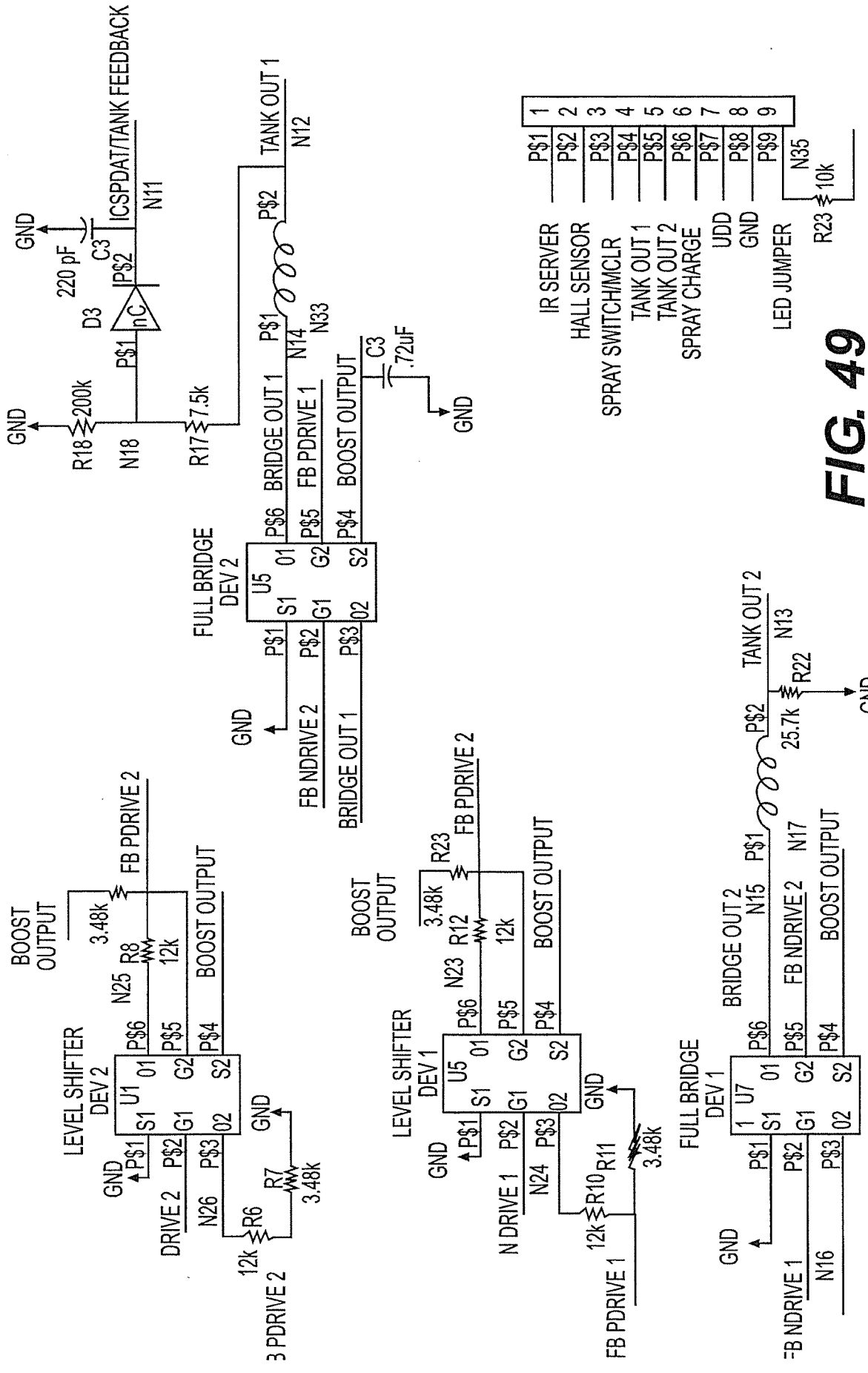
GND
220 pF
C3
ICSPDAT/TANK FEEDBACK
N11
D3
nC
IP$2
P$1
R18 200k
N18
R17 7.5k
TANK OUT 1
N12
P$2
P$1
N14
N33
BRIDGE OUT 1
FB PDRIVE 1
BOOST OUTPUT
P$6
P$5
P$4
C3
.72uF
GND
FULL BRIDGE
DEV 2
U5
S1
G1
02
01
G2
S2
P$1
P$2
P$3
GND
FB NDRIVE 2
BRIDGE OUT 1
IR SERVER
HALL SENSOR
SPRAY SWITCH/MCLR
TANK OUT 1
TANK OUT 2
SPRAY CHARGE
UDD
GND
LED JUMPER
R23 10k
N35
P$1
P$2
P$3
P$4
P$5
P$6
P$7
P$8
P$9
1
2
3
4
5
6
7
8
9
BOOST
OUTPUT
3.48k
R8
12k
N25
FB PDRIVE 2
LEVEL SHIFTER
DEV 2
U1
GND
DRIVE 2
N26
R6
12k
3 PDRIVE 2
R7
3.48k
GND
BOOST
OUTPUT
3.48k
R12
12k
R23
FB PDRIVE 2
N23
LEVEL SHIFTER
DEV 1
U5
GND
N DRIVE 1
N24
R10
12k
FB PDRIVE 1
R11
3.48k
GND
FULL BRIDGE
DEV 1
U7
GND
FB NDRIVE 1
N16
BRIDGE OUT 2
N15
P$1
N17
25.7k
R22
TANK OUT 2
N13
GND
BOOST OUTPUT

FIG. 49

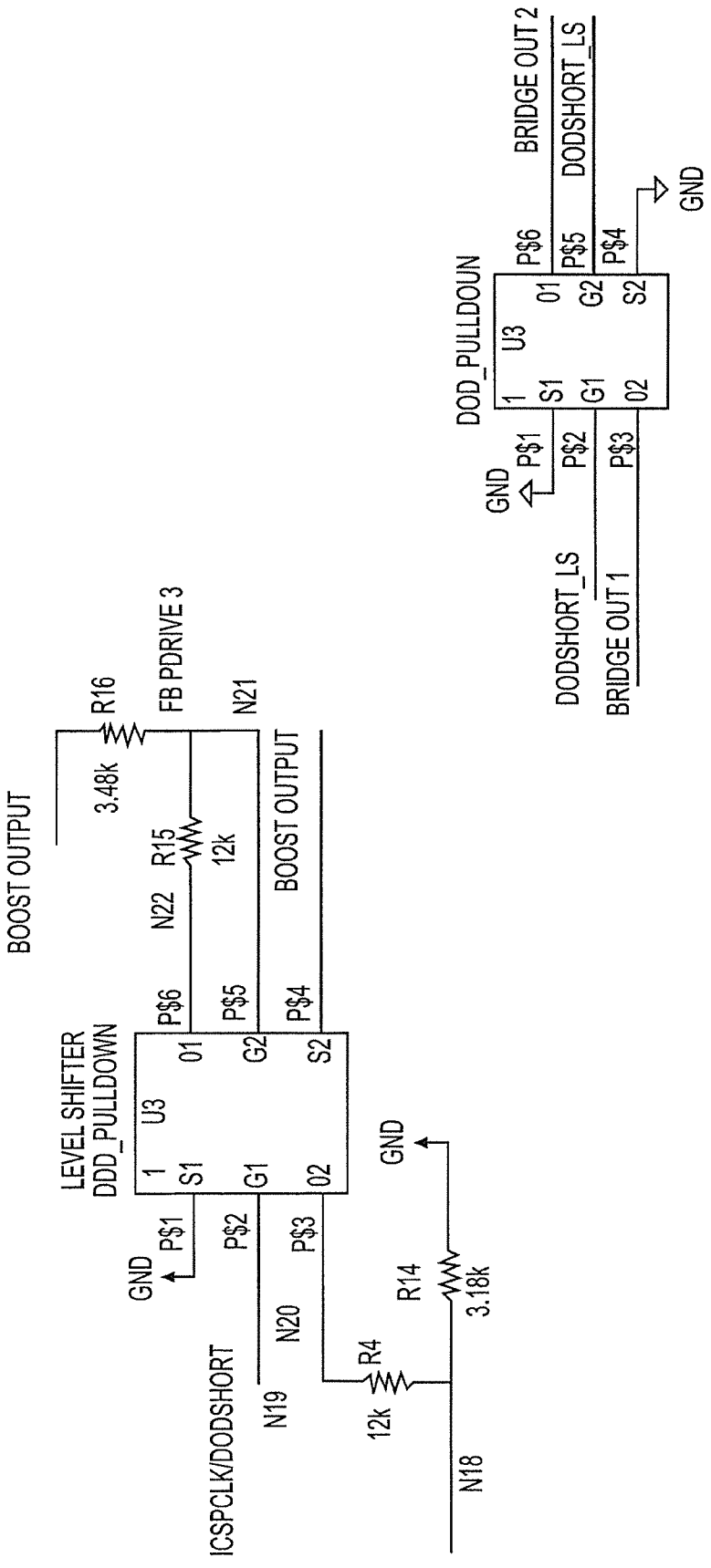
BOOST OUTPUT
R16
3.48k
FB PDRIVE 3
N21
R15
12k
N22
LEVEL SHIFTER
DDD_PULLDOWN
U3
P$6
P$5
P$4
01
G2
S2
1
S1
G1
02
P$1
P$2
P$3
BOOST OUTPUT
GND
ICSPCLK/DODSHORT
N19
N20
R4
12k
R14
3.18k
GND
N18
DOD_PULLDOUN
U3
P$6
P$5
P$4
01
G2
S2
1
S1
G1
02
P$1
P$2
P$3
BRIDGE OUT 2
DODSHORT_LS
GND
GND
DODSHORT_LS
BRIDGE OUT 1

FIG. 50