(12) INTERNATIONAL APPLICATION PUBLISHED UNDER THE PATENT COOPERATION TREATY (PCT)

CORRECTED VERSION

(19) World Intellectual Property Organization
International Bureau

(43) International Publication Date
5 November 2009 (05.11.2009)

PCT

(10) International Publication Number
WO 2009/134583 A8

(51) International Patent Classification:
G06F 17/24 (2006.01) *G06F 17/30* (2006.01)
G06F 17/21 (2006.01)

(21) International Application Number:
PCT/US2009/039388

(22) International Filing Date:
3 April 2009 (03.04.2009)

(25) Filing Language: English

(26) Publication Language: English

(30) Priority Data:
12/110,351 28 April 2008 (28.04.2008) US

(71) Applicant *(for all designated States except US)*: **MICROSOFT CORPORATION** [US/US]; Attn: Sharon Rydberg, (sharonr), 8/2321, LCA, International Patents Department, One Microsoft Way, Redmond, WA 98052-6399 (US).

(72) Inventors: **MCDONALD, Paul**; c/o Microsoft Corporation, LCA, International Patents Department, One Microsoft Way, Redmond, WA 98052-6399 (US). **BAILEY, Eric**; c/o Microsoft Corporation, LCA, International Patents Department, One Microsoft Way, Redmond, WA 98052-6399 (US).

(81) Designated States *(unless otherwise indicated, for every kind of national protection available)*: AE, AG, AL, AM, AO, AT, AU, AZ, BA, BB, BG, BH, BR, BW, BY, BZ, CA, CH, CN, CO, CR, CU, CZ, DE, DK, DM, DO, DZ, EC, EE, EG, ES, FI, GB, GD, GE, GH, GM, GT, HN, HR, HU, ID, IL, IN, IS, JP, KE, KG, KM, KN, KP, KR, KZ, LA, LC, LK, LR, LS, LT, LU, LY, MA, MD, ME, MG, MK, MN, MW, MX, MY, MZ, NA, NG, NI, NO, NZ, OM, PG, PH, PL, PT, RO, RS, RU, SC, SD, SE, SG, SK, SL, SM, ST, SV, SY, TJ, TM, TN, TR, TT, TZ, UA, UG, US, UZ, VC, VN, ZA, ZM, ZW.

(84) Designated States *(unless otherwise indicated, for every kind of regional protection available)*: ARIPO (BW, GH, GM, KE, LS, MW, MZ, NA, SD, SL, SZ, TZ, UG, ZM, ZW), Eurasian (AM, AZ, BY, KG, KZ, MD, RU, TJ, TM), European (AT, BE, BG, CH, CY, CZ, DE, DK, EE, ES, FI, FR, GB, GR, HR, HU, IE, IS, IT, LT, LU, LV, MC, MK, MT, NL, NO, PL, PT, RO, SE, SI, SK, TR), OAPI (BF, BJ, CF, CG, CI, CM, GA, GN, GQ, GW, ML, MR, NE, SN, TD, TG).

Declarations under Rule 4.17:

— *as to applicant's entitlement to apply for and be granted a patent (Rule 4.17(ii))*

Published:

— *with international search report (Art. 21(3))*

(88) Date of publication of the international search report:
7 January 2010

[Continued on next page]

(54) Title: TECHNIQUES TO MODIFY A DOCUMENT USING A LATENT TRANSFER SURFACE

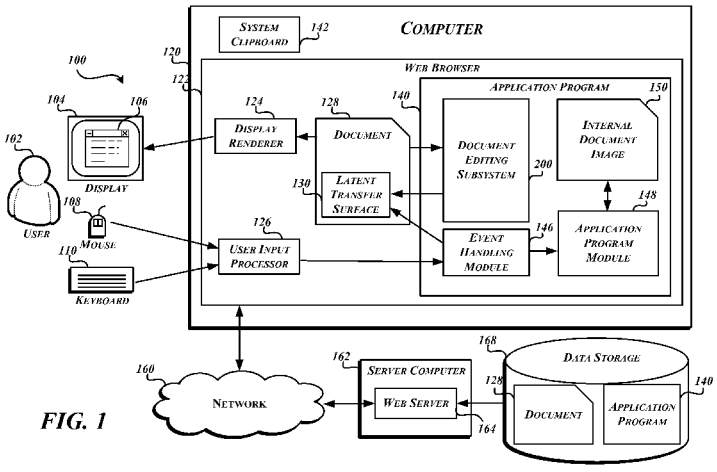

FIG. 1

(57) Abstract: Techniques to modify a document using a latent transfer surface are described. An apparatus may comprise a document editing subsystem comprising a transfer surface creation module operative to embed a latent transfer surface in the document. A transfer control module may be communicatively coupled to the transfer surface creation module. The transfer control module may be operative to receive a transfer request to transfer media content for the document, and transfer the media content using the latent transfer surface in response to the transfer request. Other embodiments are described and claimed.

WO 2009/134583 A8

WO 2009/134583 A8

(48) **Date of publication of this corrected version**:
10 September 2010

(15) **Information about Correction**:
see Notice of 10 September 2010