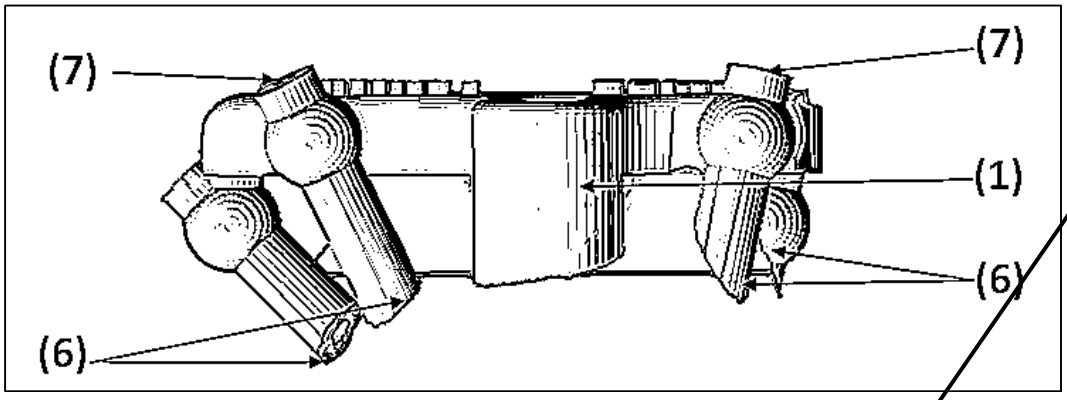

Figure 1-E Femoral template, Back view

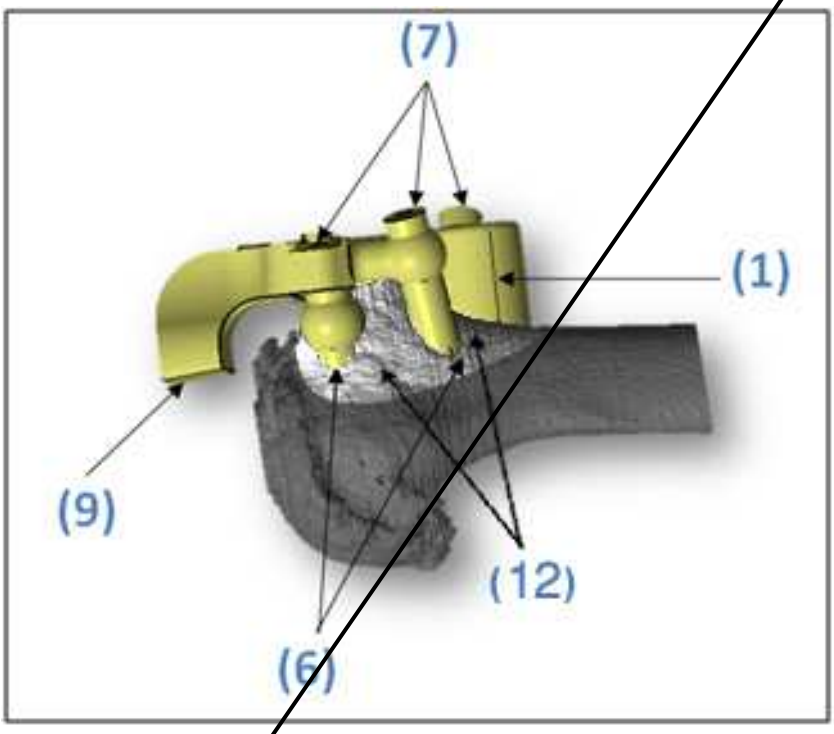

Figure 1-F Femoral template on a bone model (distal femur), side view

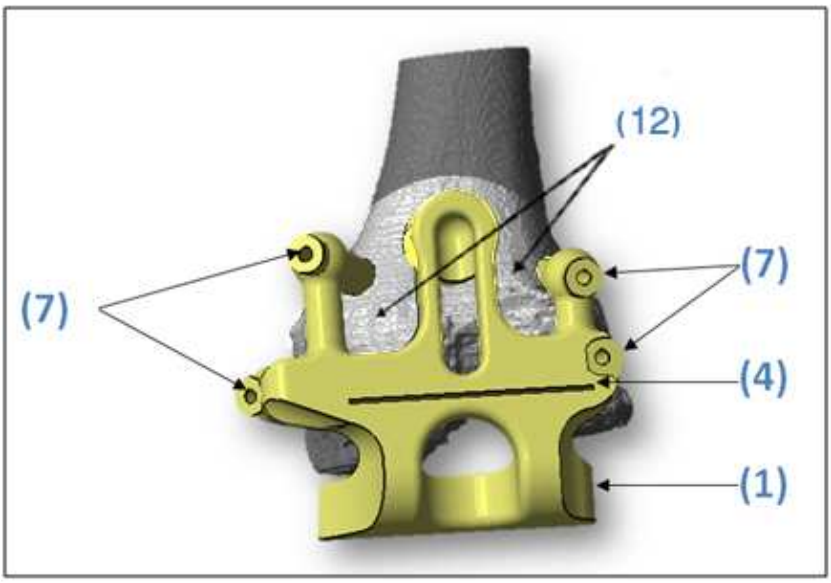

Figure 1-G Femoral template on a bone model (distal femur), top view

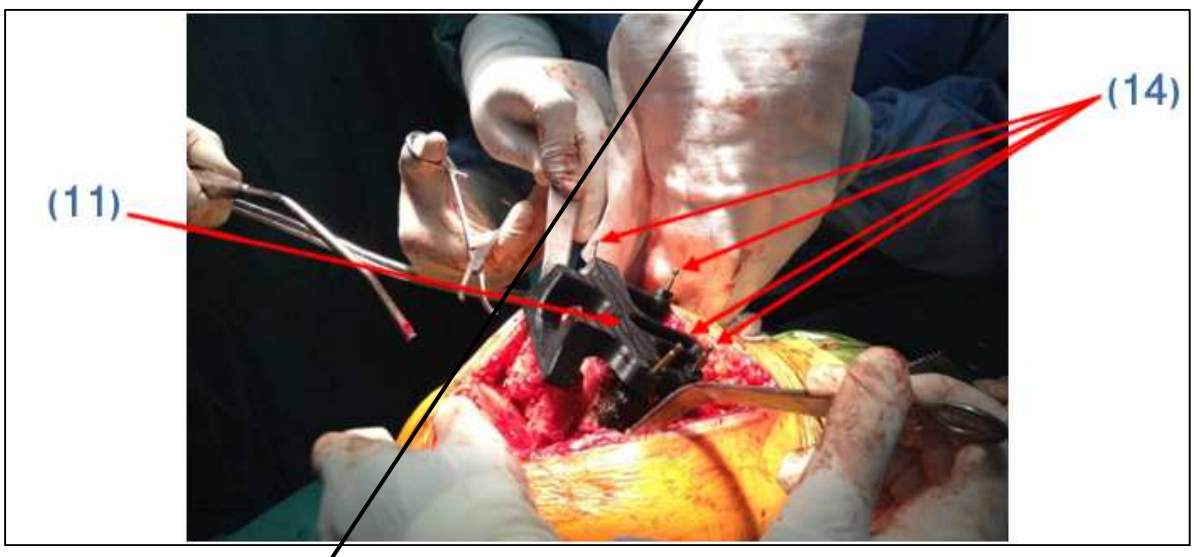

Figure 1-H Femoral template on a patient (distal femur), oblique view shows the top, the front and the side views while the template is fixed by pins

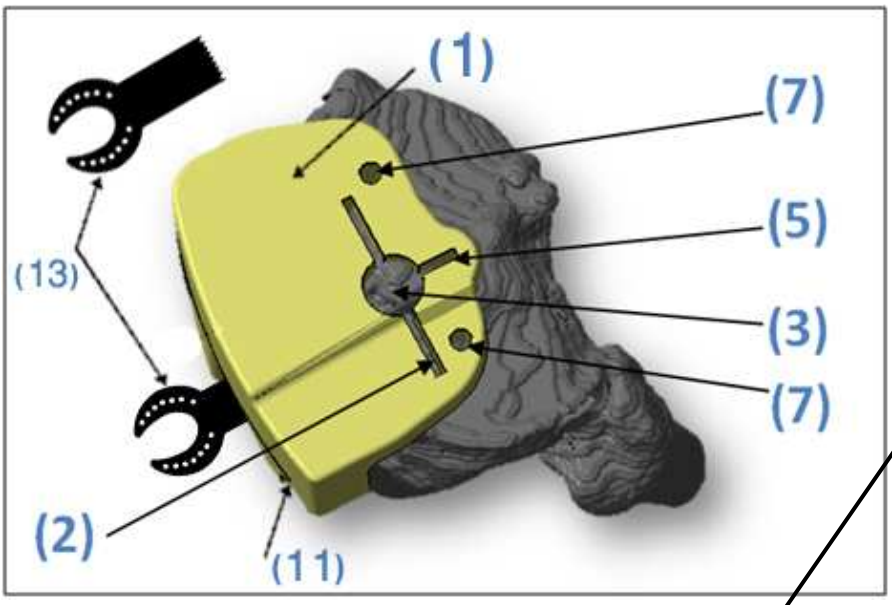

Figure 2-F Tibial template on a bone model, top view

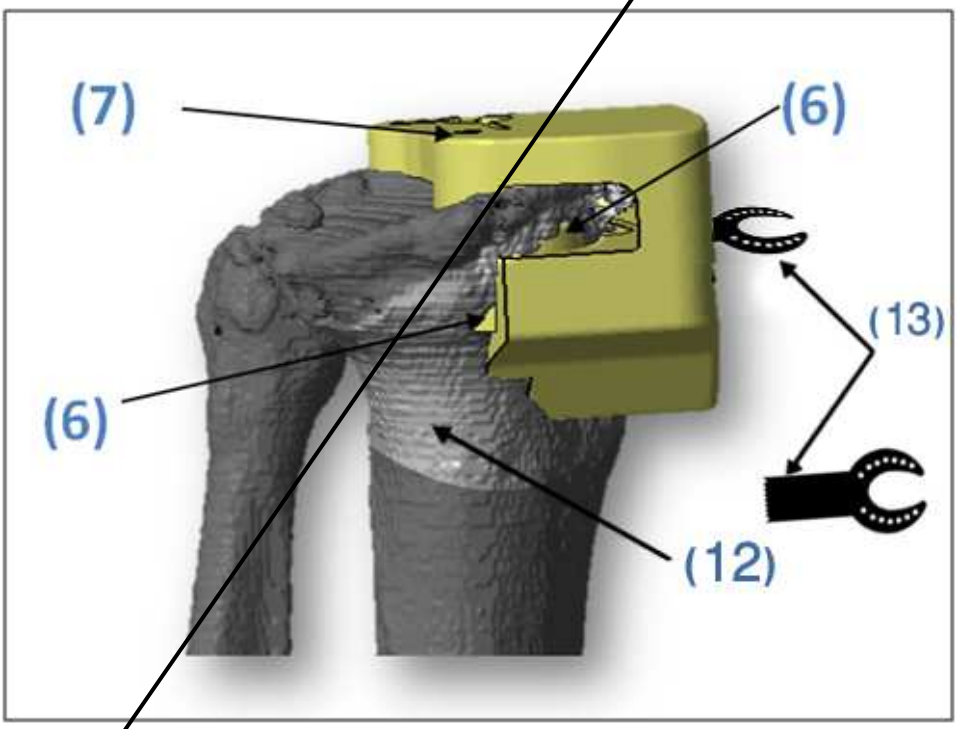

Figure 2-G Tibial template on a bone model, side view-left

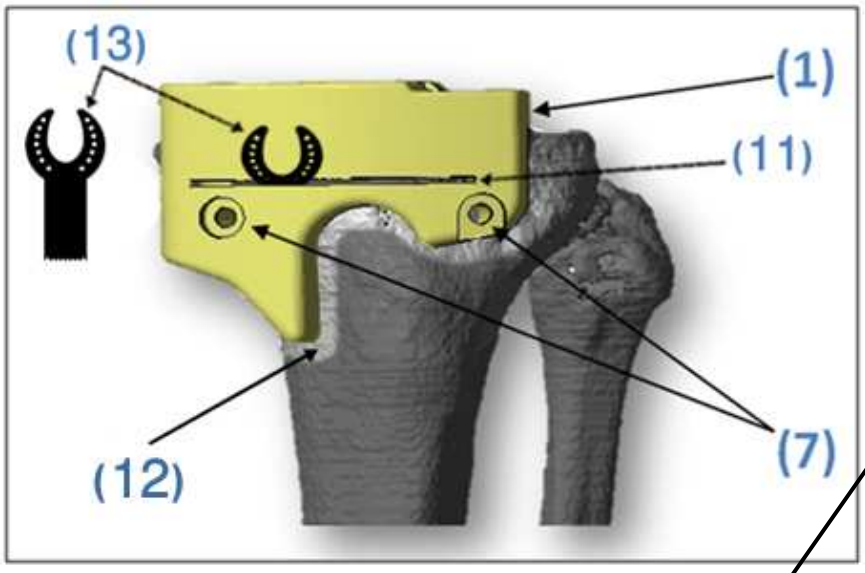

Figure 2-H Tibial template on a bone model, front view

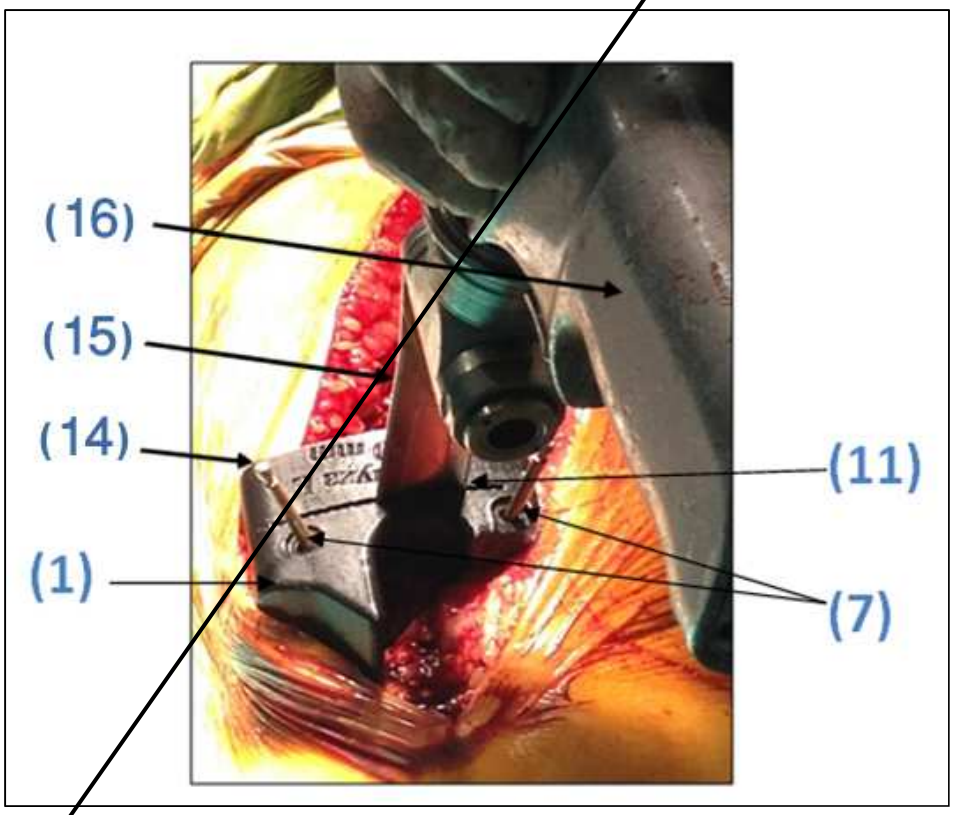

Figure 2-I Tibial template on a patient , front view with the saw blade inside the slit ready to cut the bone

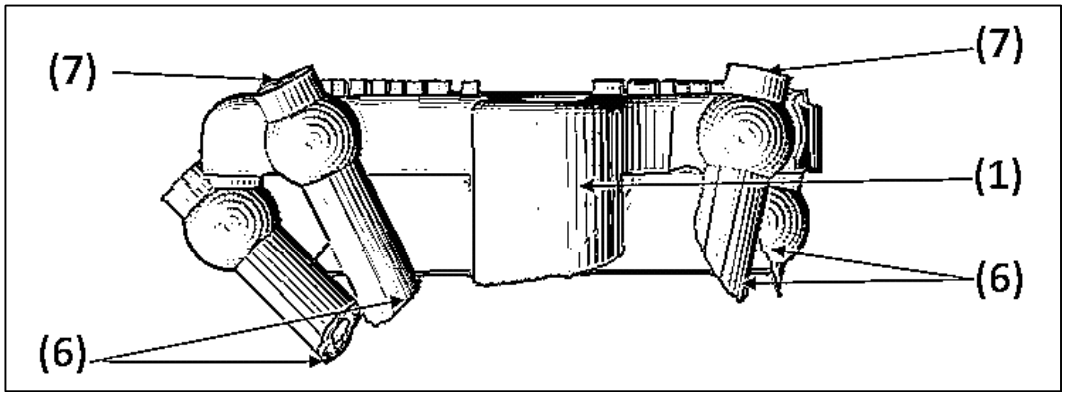

Figure 1-E Femoral template, Back view

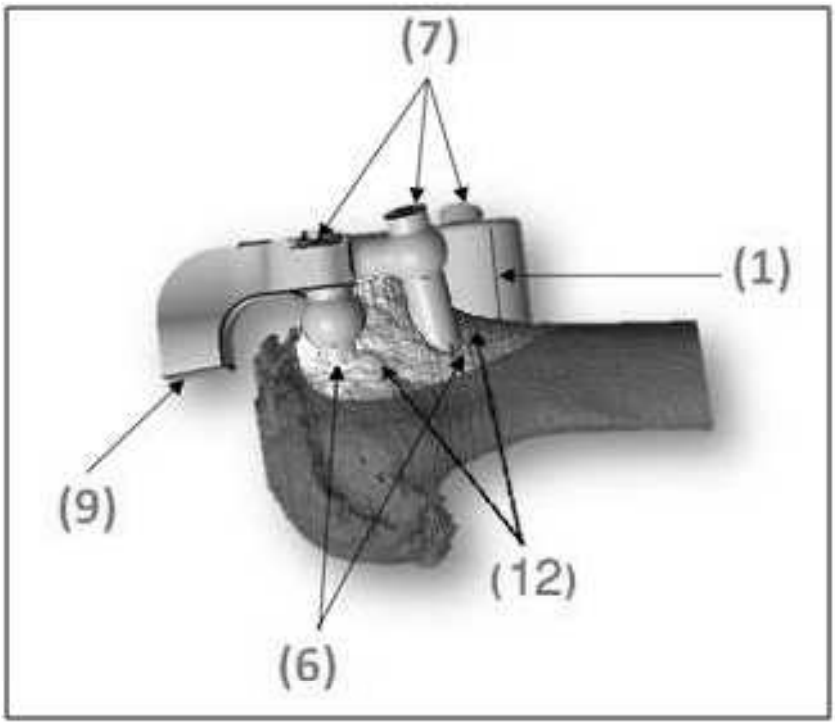

Figure 1-F Femoral template on a bone model (distal femur), side view

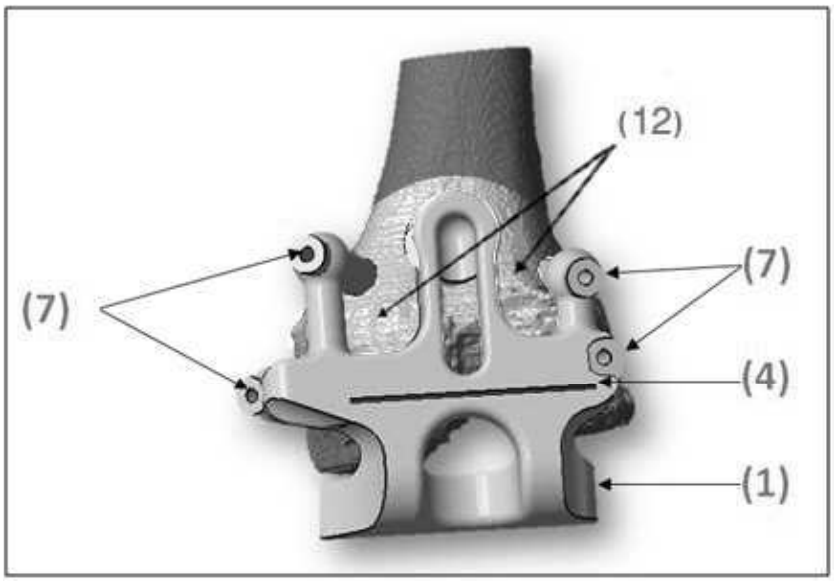

Figure 1-G Femoral template on a bone model (distal femur), top view

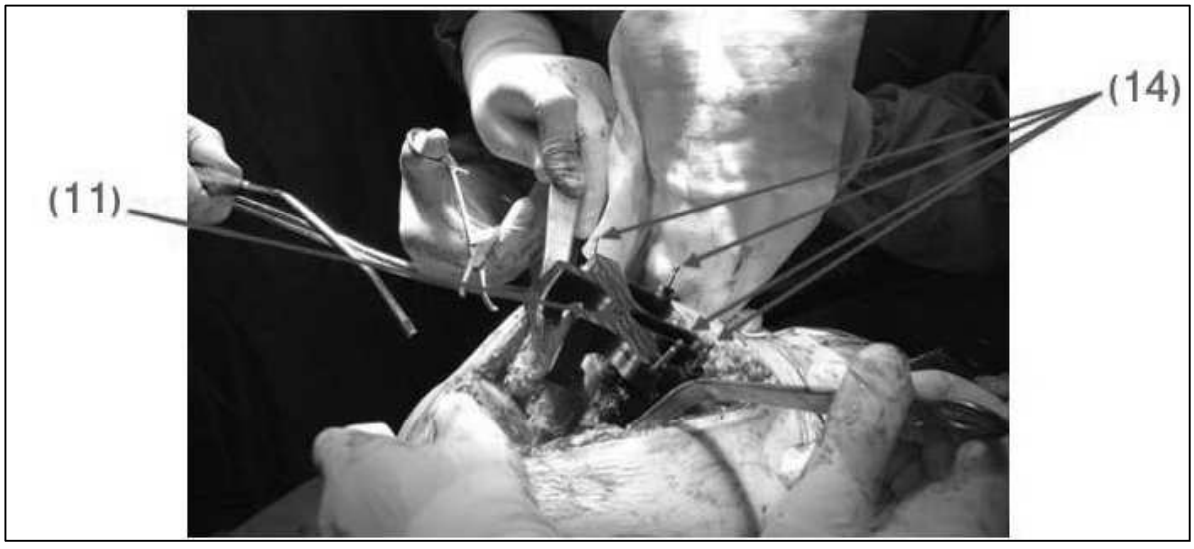

Figure 1-H Femoral template on a patient (distal femur), oblique view shows the top, the front and the side views while the template is fixed by pins

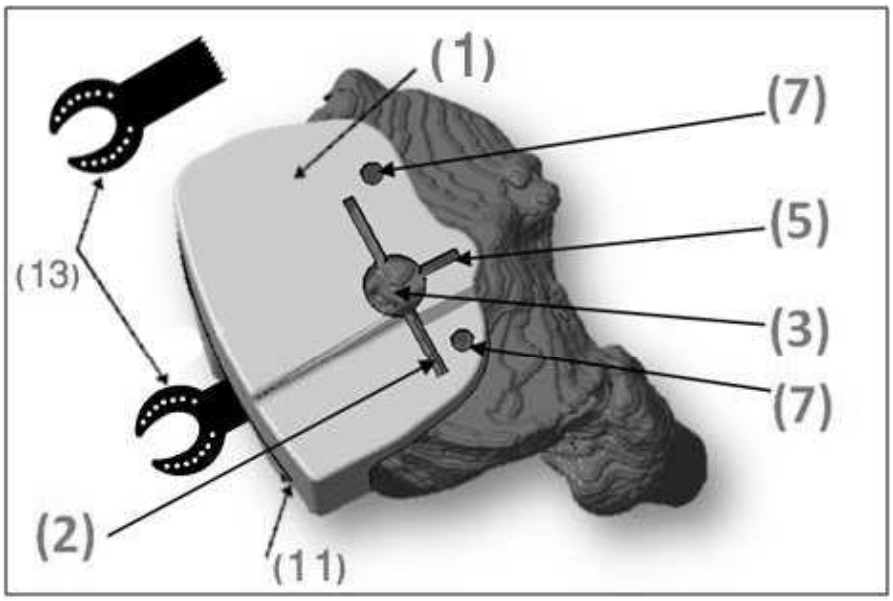

Figure 2-F Tibial template on a bone model, top view

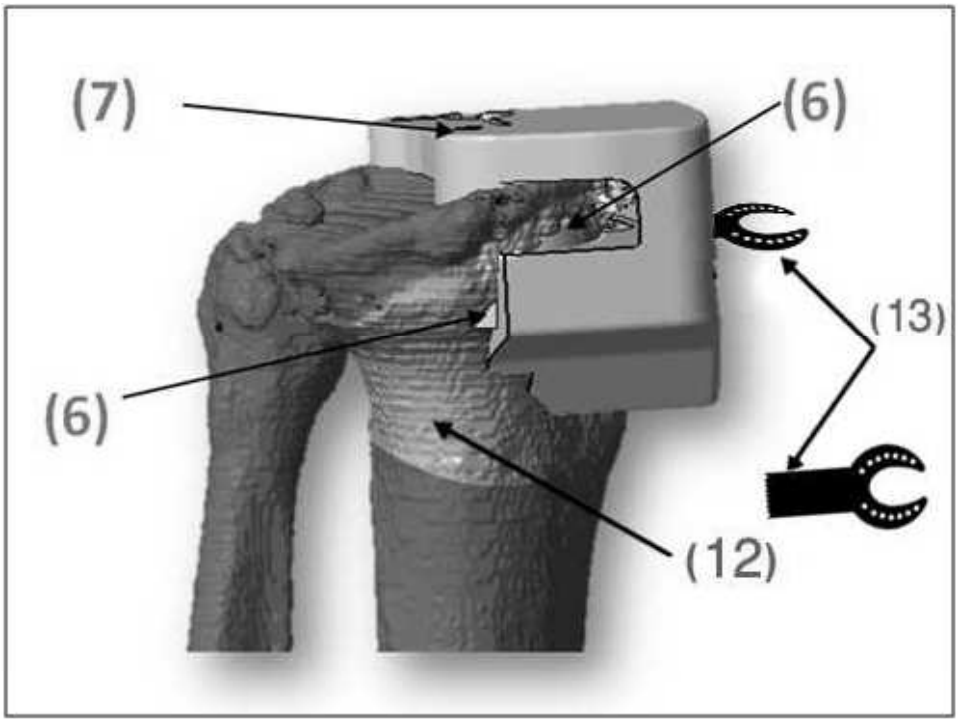

Figure 2-G Tibial template on a bone model, side view-left

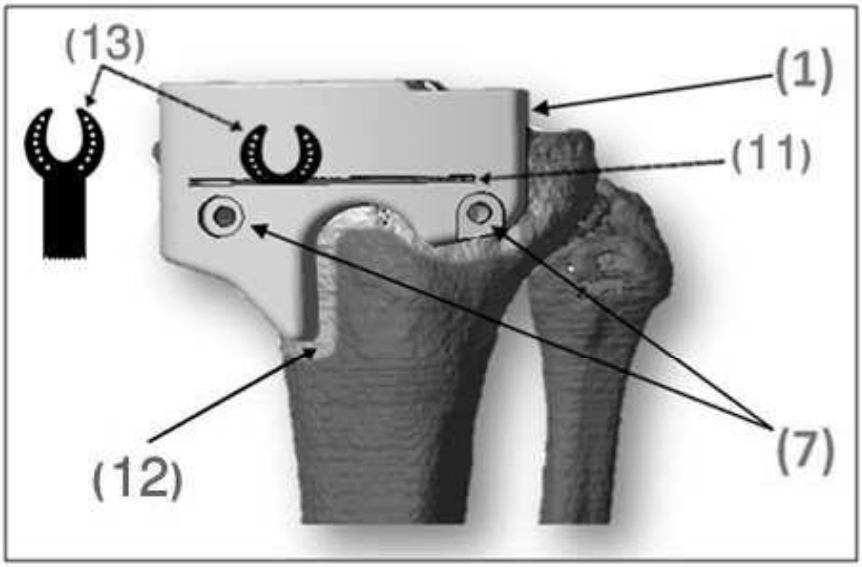

Figure 2-H Tibial template on a bone model, front view

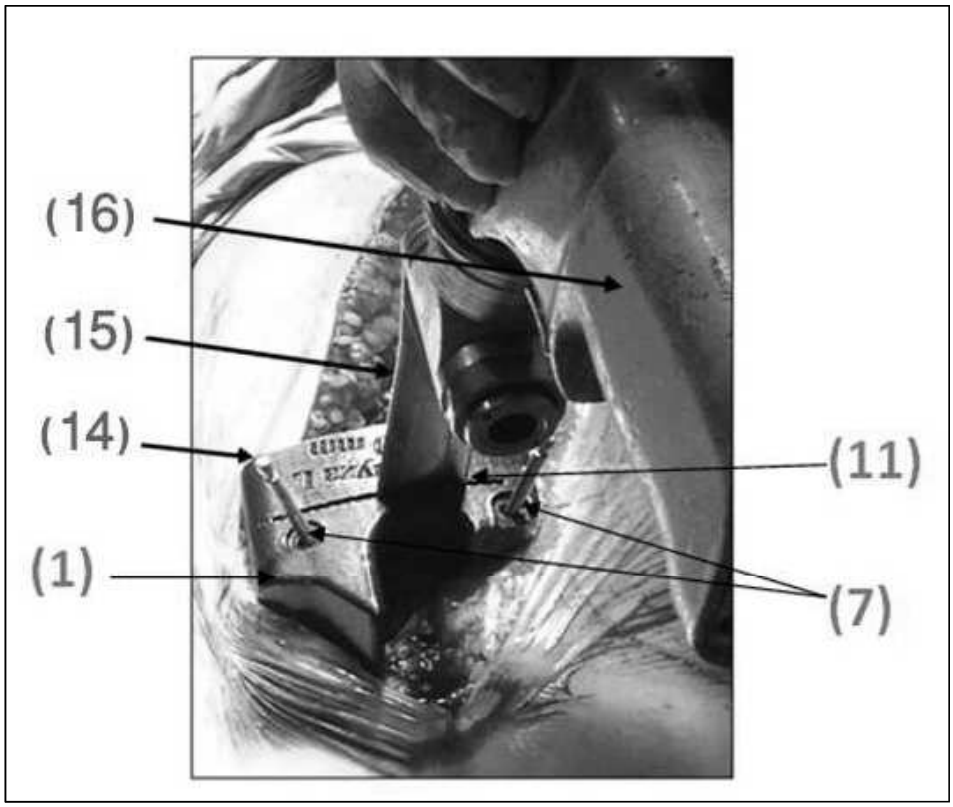

Figure 2-I Tibial template on a patient , front view with the saw blade inside the slit ready to cut the bone