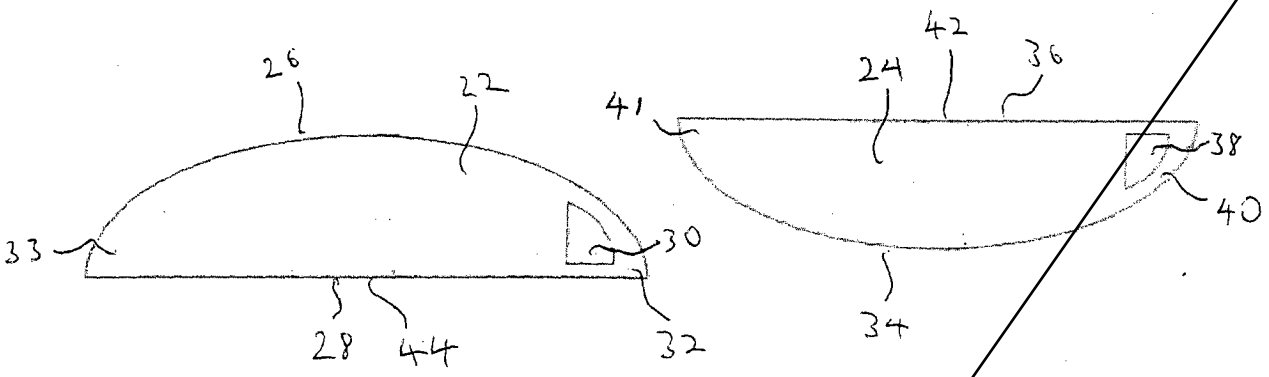

Figure 1

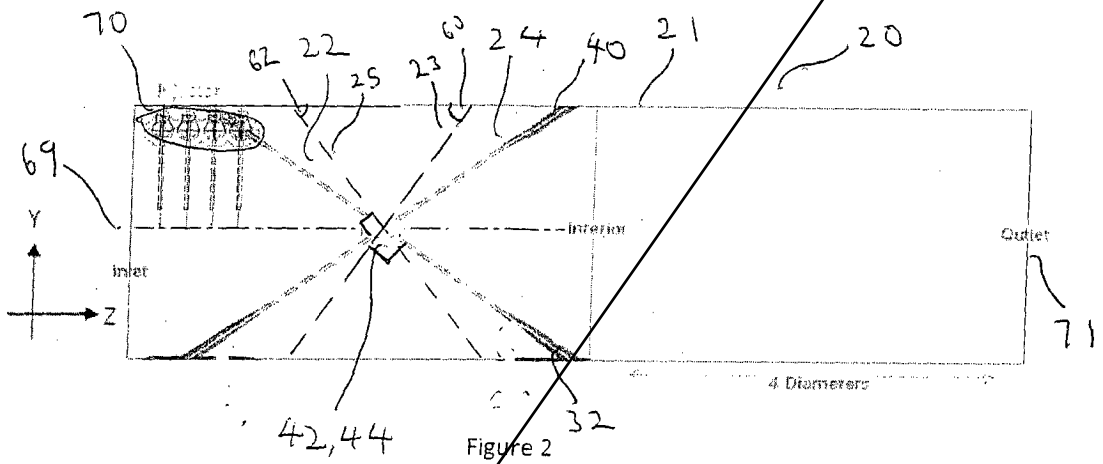

Figure 2

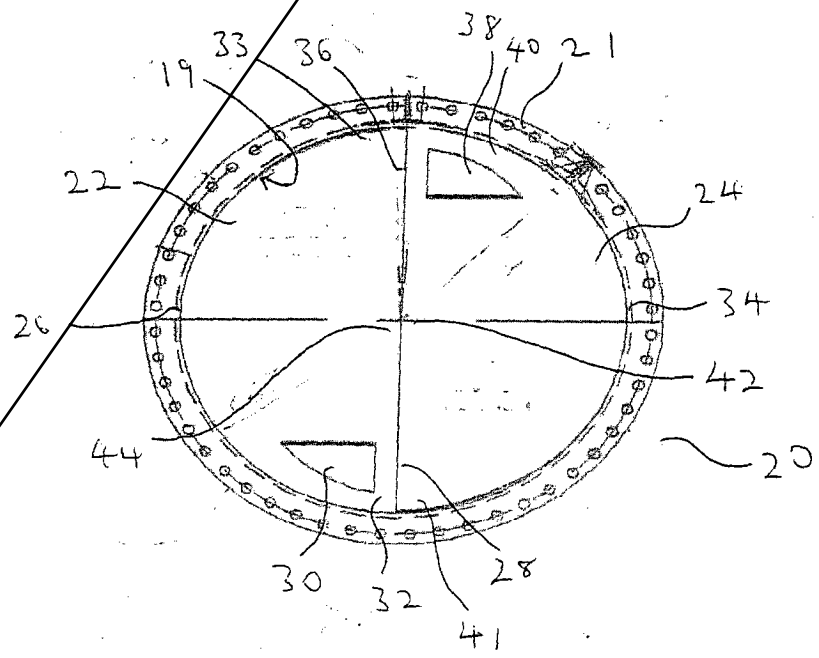

Figure 3

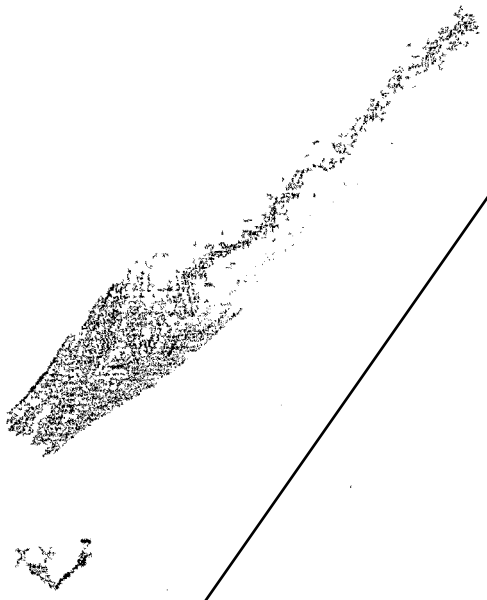

Figure 4



Figure 5



Figure 6

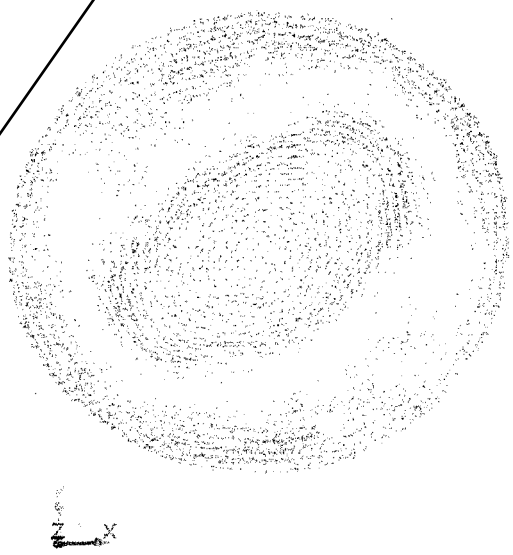

Figure 7

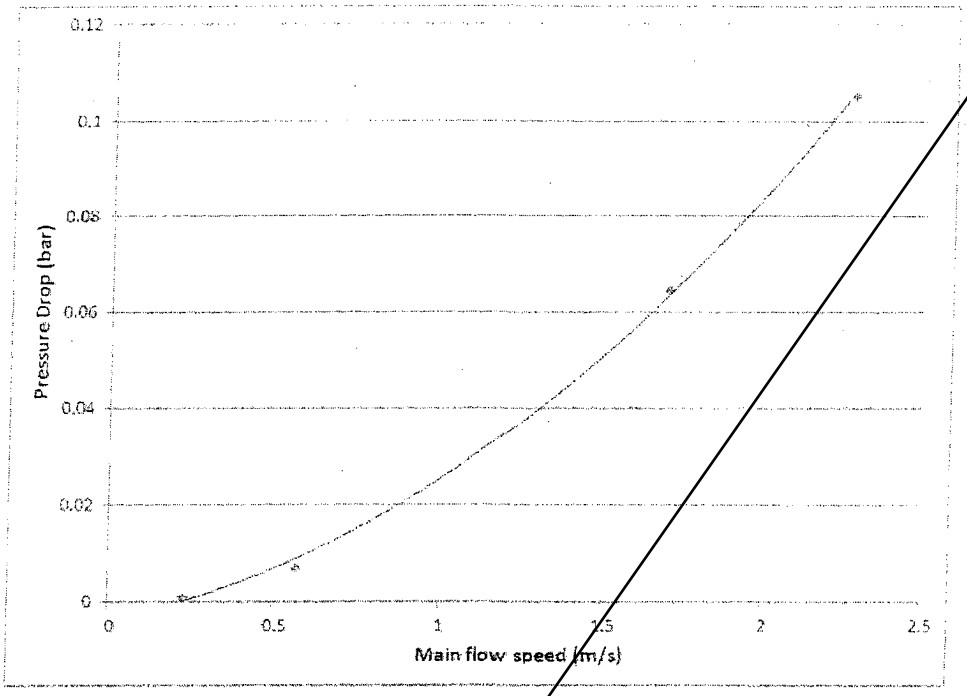

Figure 8

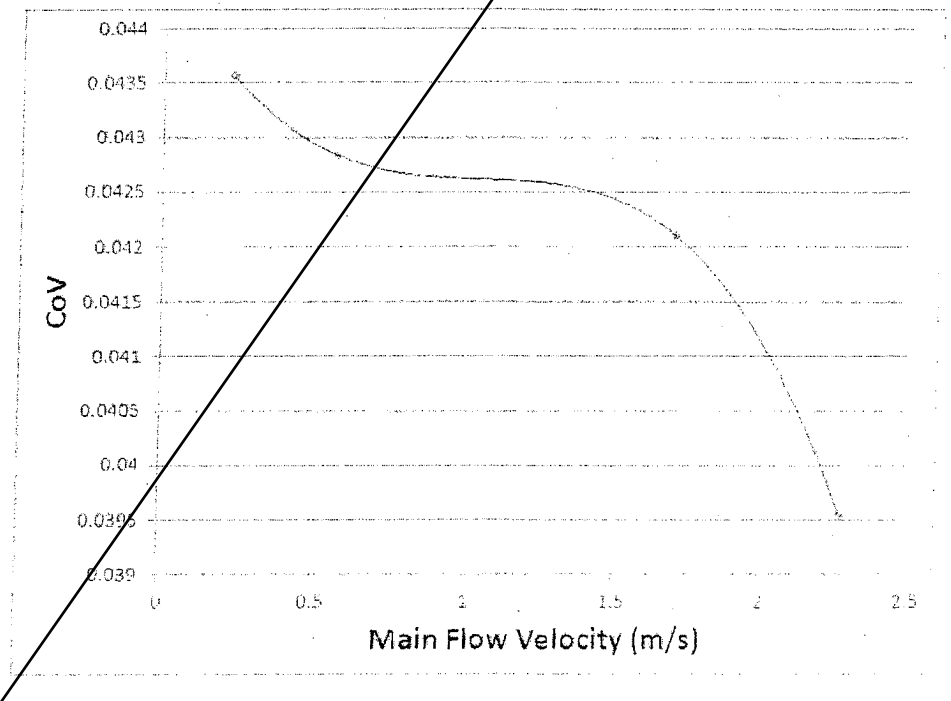

Figure 9

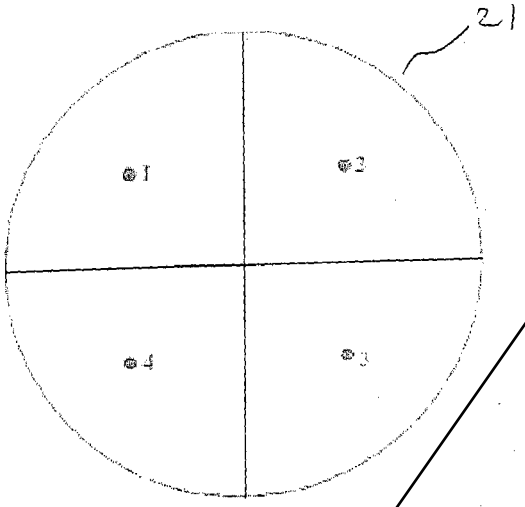

Figure 10

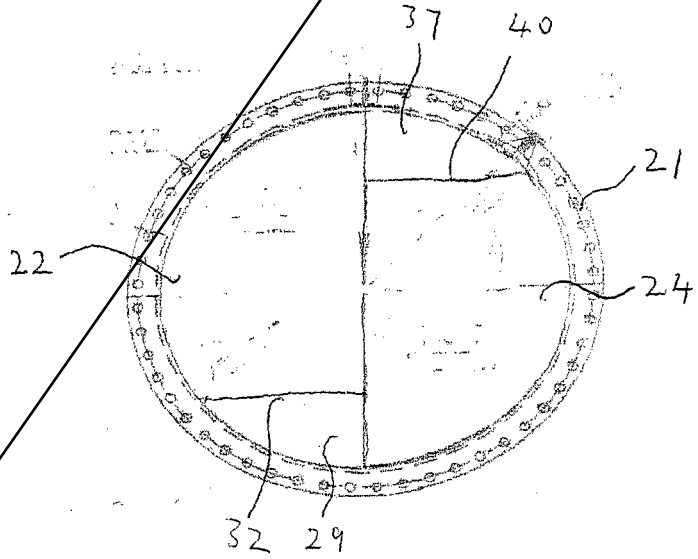

Figure 11

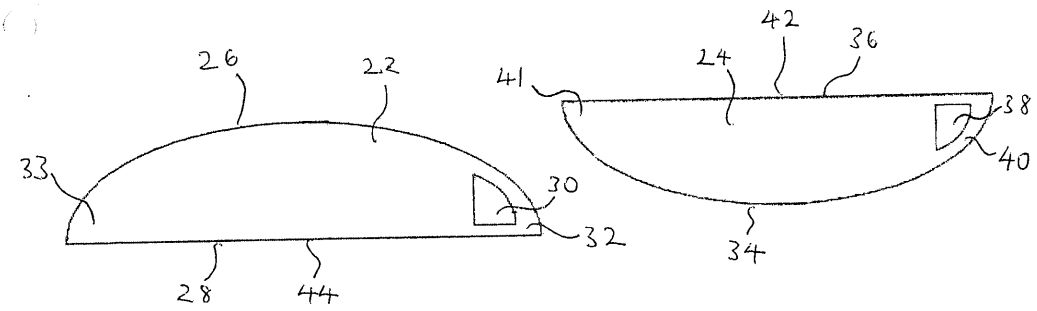

Figure 1

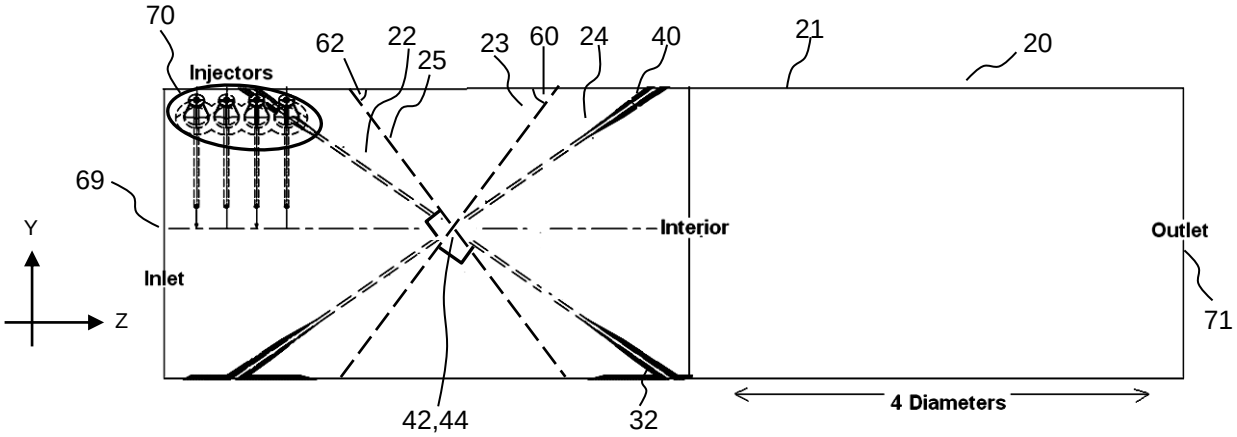

Figure 2

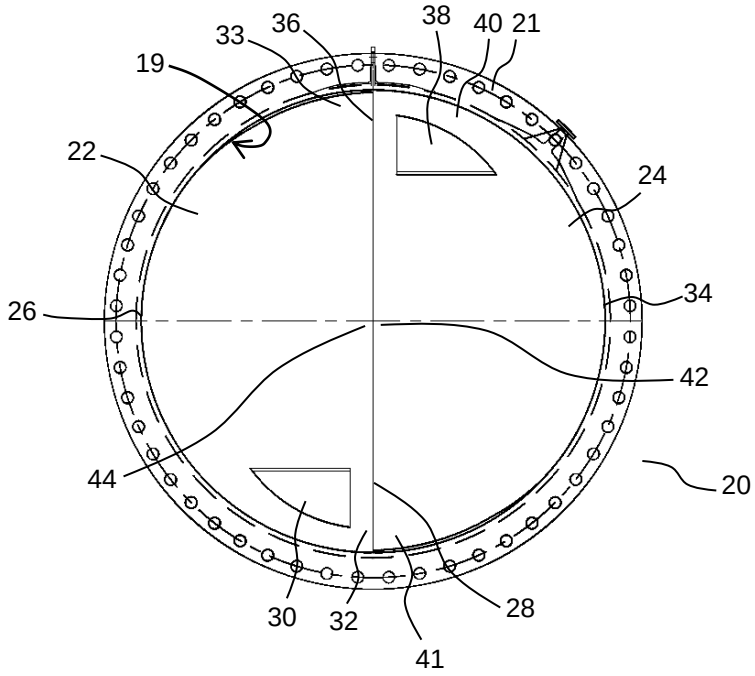

Figure 3



Figure 4



Figure 5

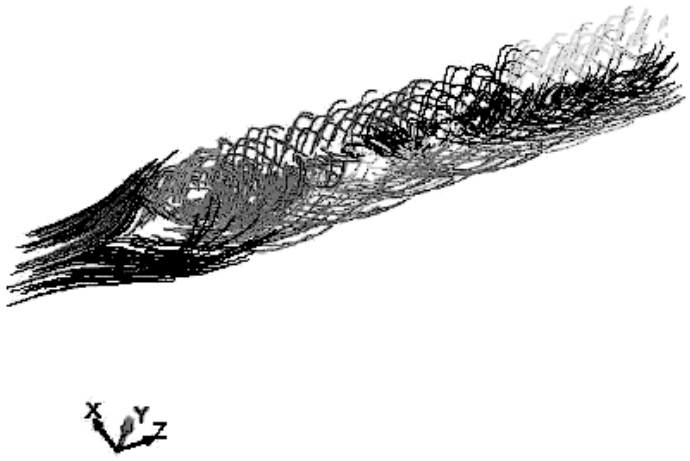

Figure 6

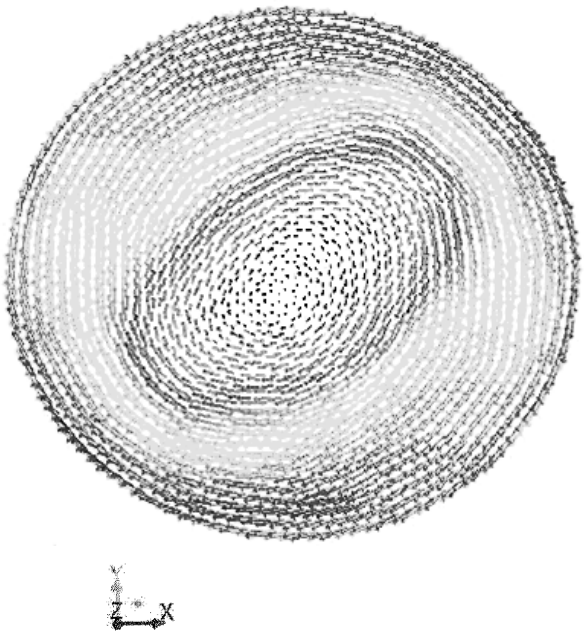

Figure 7

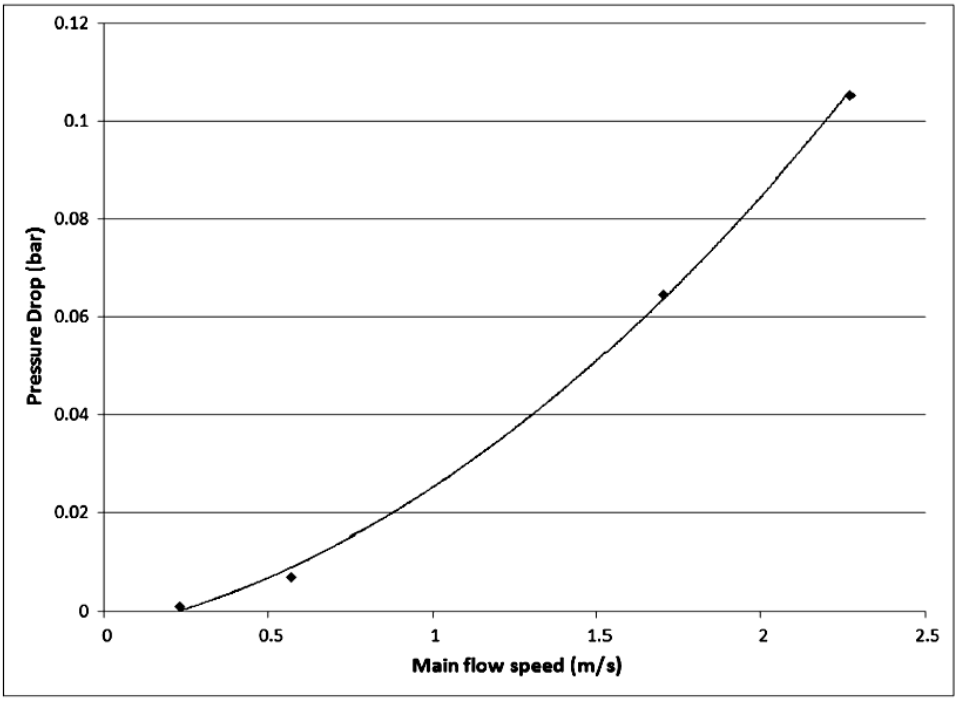

Figure 8

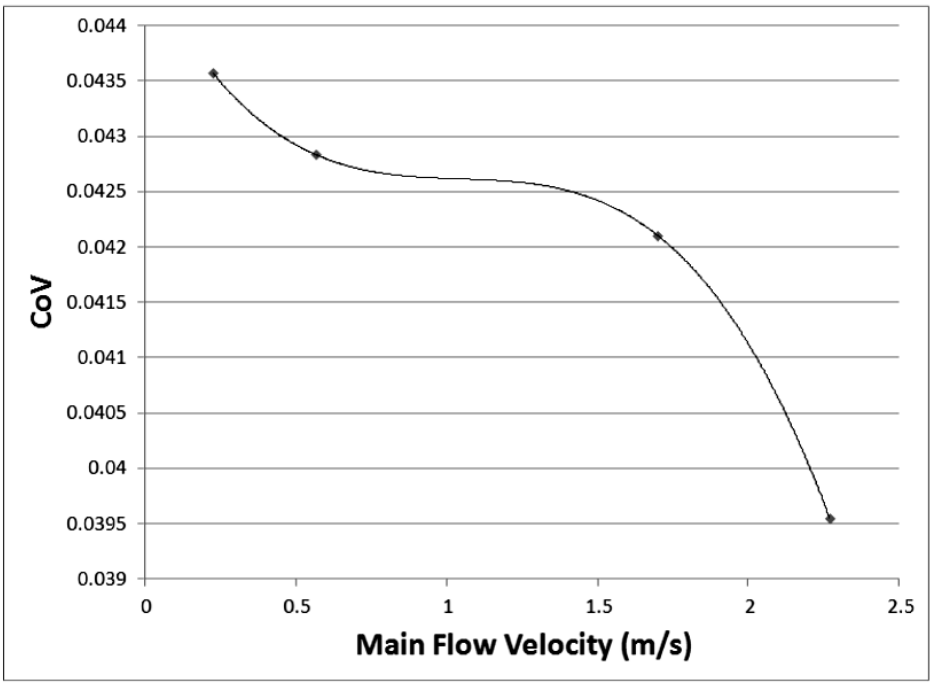

Figure 9

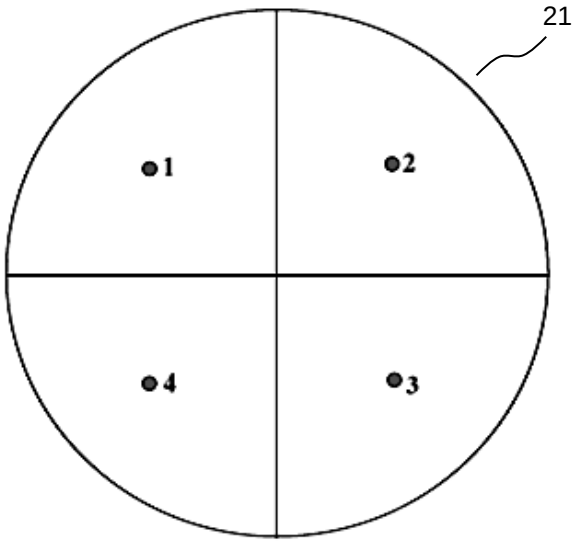

Figure 10

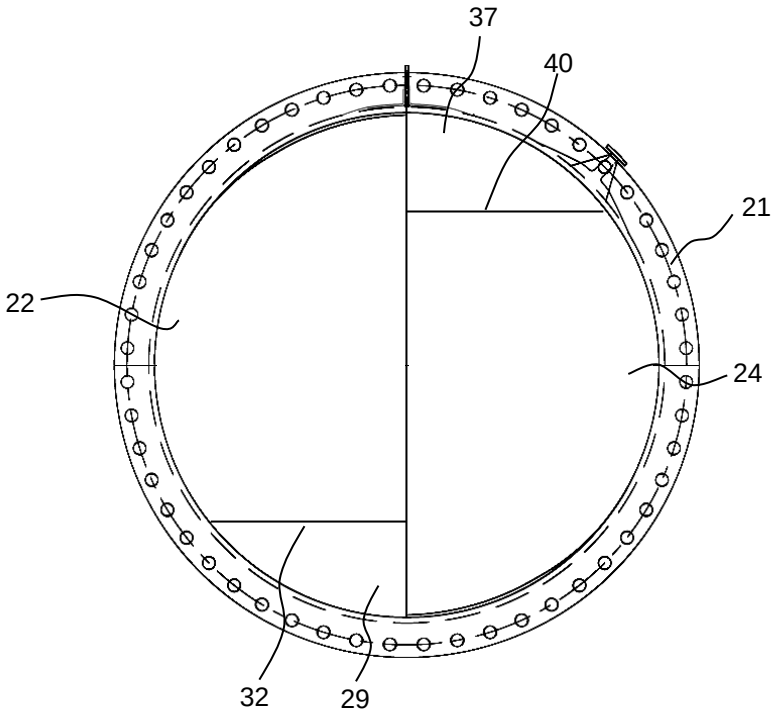

Figure 11