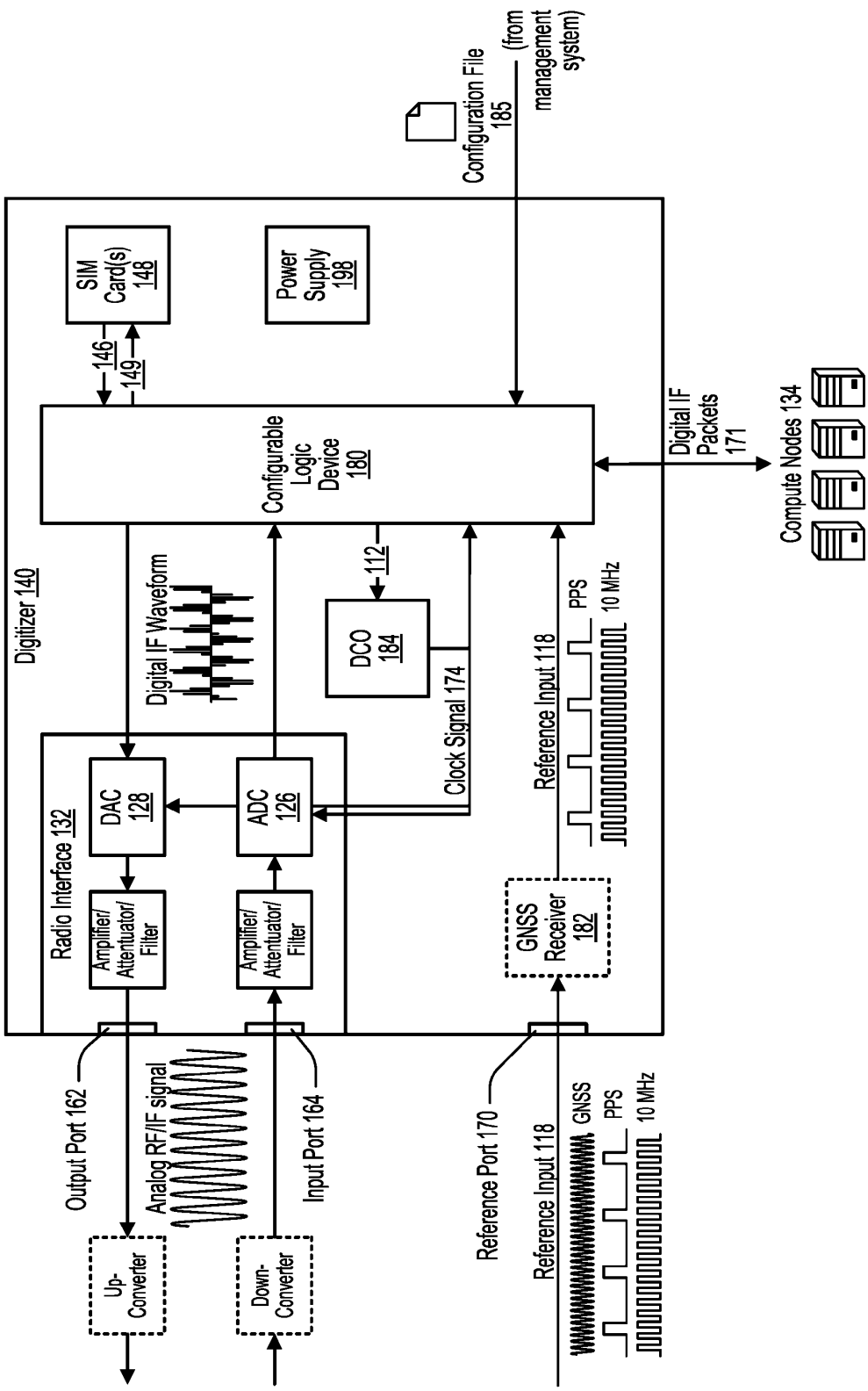
Configuration File 185
(from management system)
SIM Card(s) 148
Power Supply 198
146
149
Configurable Logic Device 180
Digital IF Packets 171
Compute Nodes 134
Digitizer 140
Digital IF Waveform
112
DCO 184
Clock Signal 174
Reference Input 118
PPS
10 MHz
Radio Interface 132
DAC 128
ADC 126
Amplifier/ Attentuator/ Filter
Amplifier/ Attentuator/ Filter
GNSS Receiver 182
Output Port 162
Analog RF/IF signal
Input Port 164
Reference Port 170
Reference Input 118
GNSS
PPS
10 MHz
Up-Converter
Down-Converter

FIG. 1

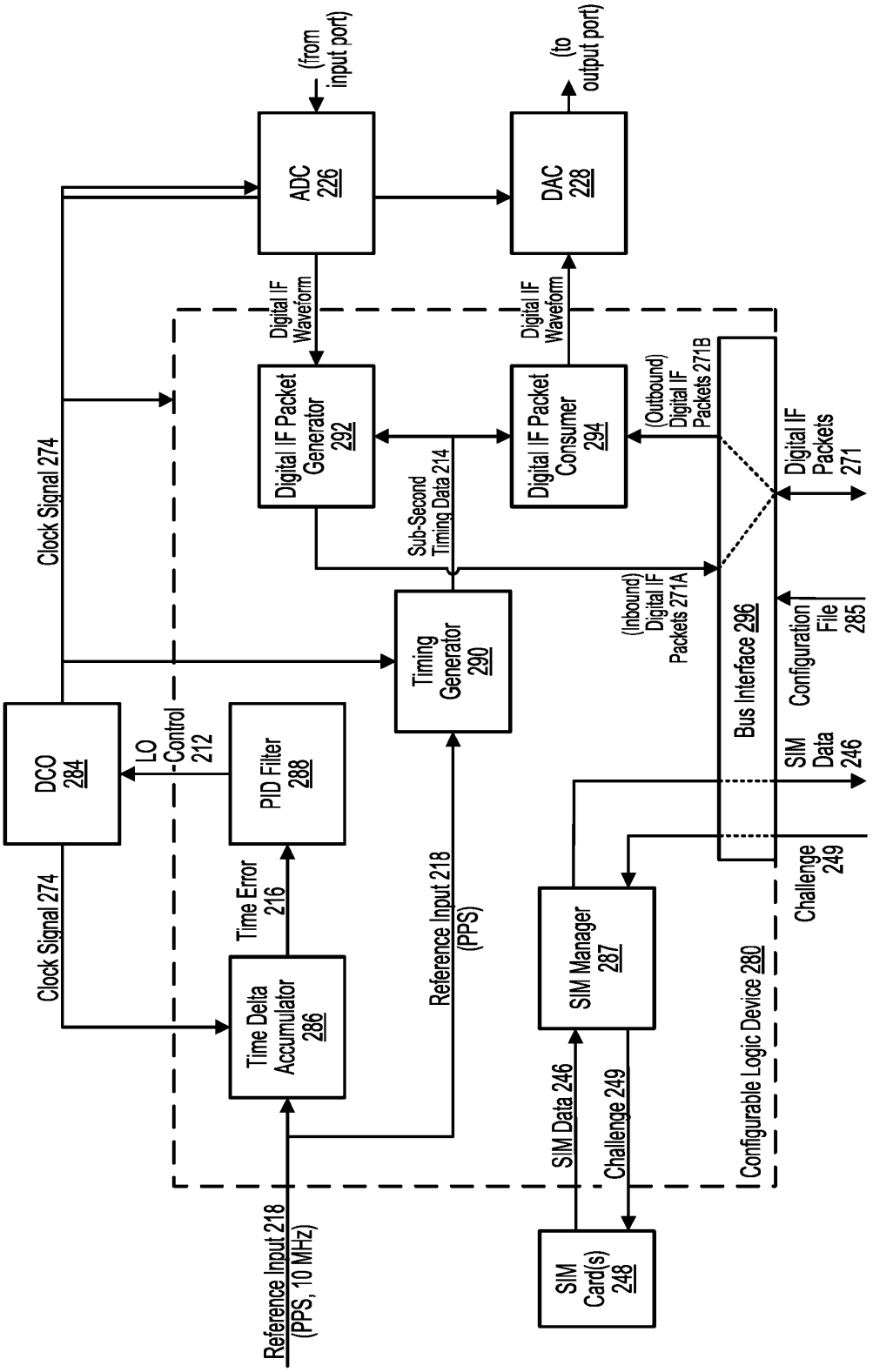
(from input port)
(to output port)
ADC 226
DAC 228
Digital IF Waveform
Digital IF Waveform
Digital IF Packet Generator 292
Digital IF Packet Consumer 294
(Outbound) Digital IF Packets 271B
Digital IF Packets 271
Sub-Second Timing Data 214
(Inbound) Digital IF Packets 271A
Clock Signal 274
Timing Generator 290
Bus Interface 296
Configuration File 285
DCO 284
LO Control 212
PID Filter 288
SIM Data 246
Challenge 249
Time Error 216
Clock Signal 274
Time Delta Accumulator 286
Reference Input 218 (PPS)
SIM Manager 287
Configurable Logic Device 280
SIM Data 246
Challenge 249
Reference Input 218 (PPS, 10 MHz)
SIM Card(s) 248

FIG. 2

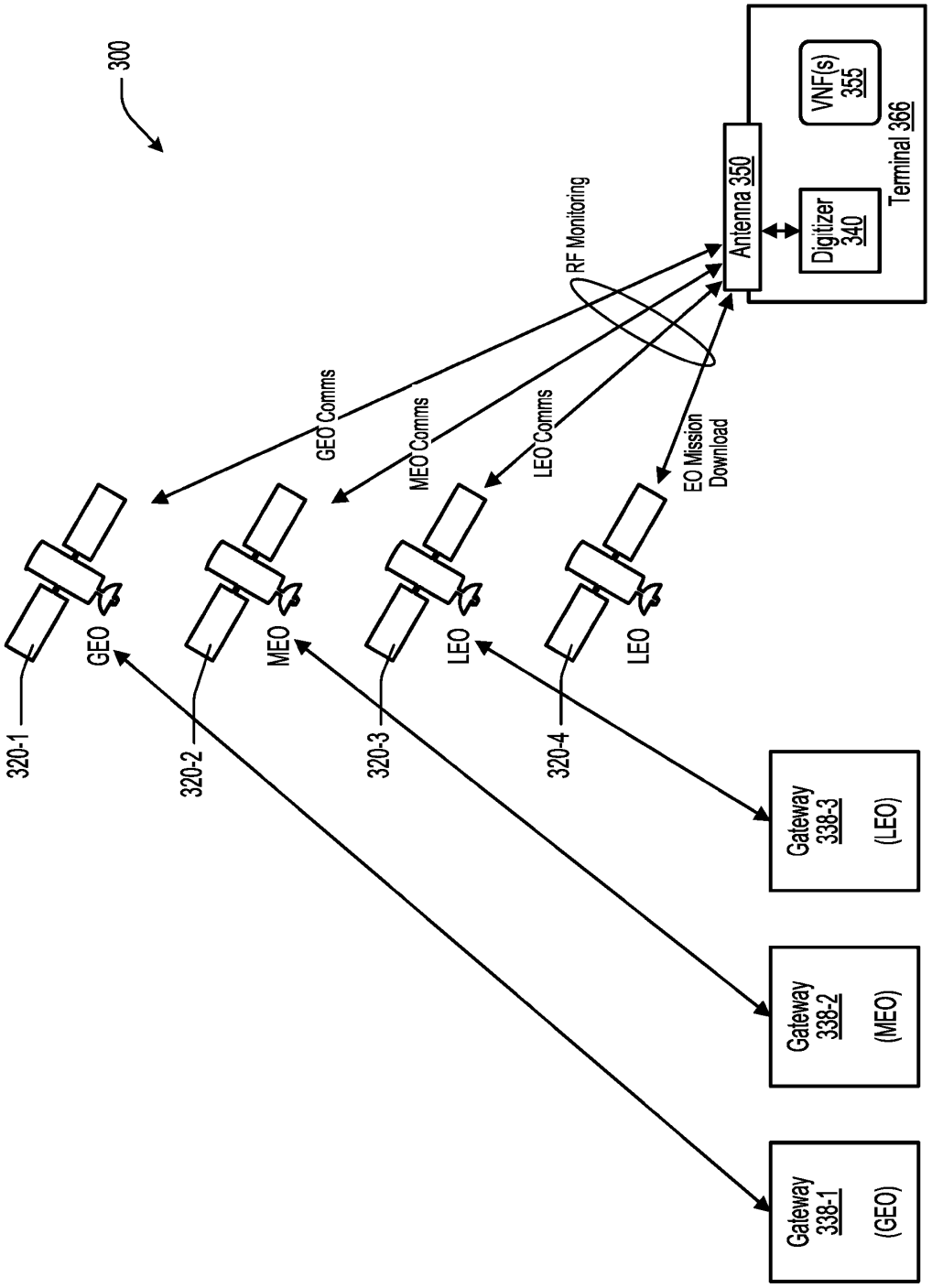
300
320-1
320-2
320-3
320-4
GEO
MEO
LEO
LEO
GEO Comms
MEO Comms
LEO Comms
EO Mission Download
RF Monitoring
Antenna 350
Digitizer 340
VNF(s) 355
Terminal 366
Gateway 338-3 (LEO)
Gateway 338-2 (MEO)
Gateway 338-1 (GEO)

FIG. 3

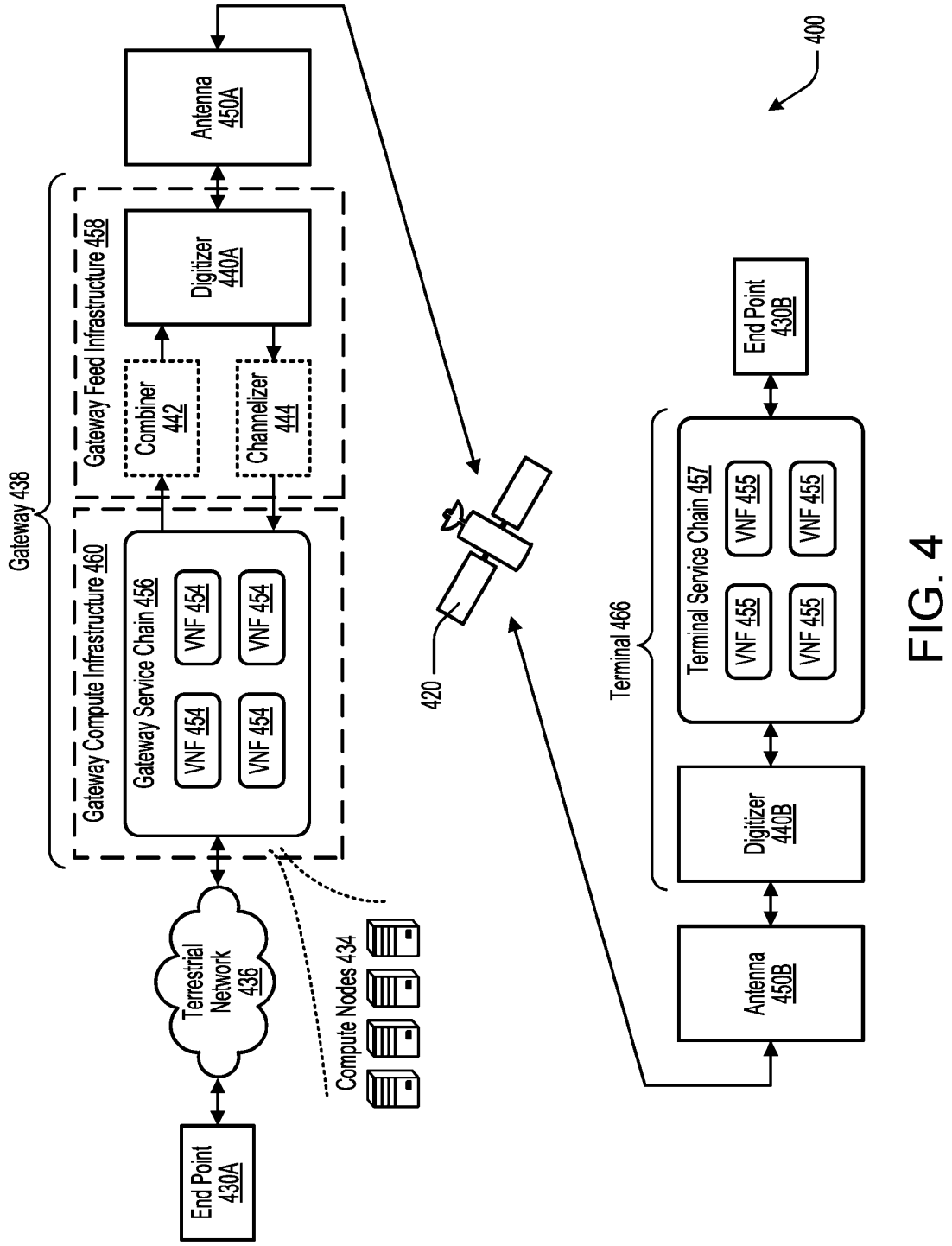
400
Antenna 450A
Digitizer 440A
Combiner 442
Channelizer 444
Gateway Feed Infrastructure 458
Gateway 438
Gateway Compute Infrastructure 460
Gateway Service Chain 456
VNF 454
VNF 454
VNF 454
VNF 454
Terrestrial Network 436
Compute Nodes 434
End Point 430A
420
Terminal 466
End Point 430B
Terminal Service Chain 457
VNF 455
VNF 455
VNF 455
VNF 455
Digitizer 440B
Antenna 450B

FIG. 4

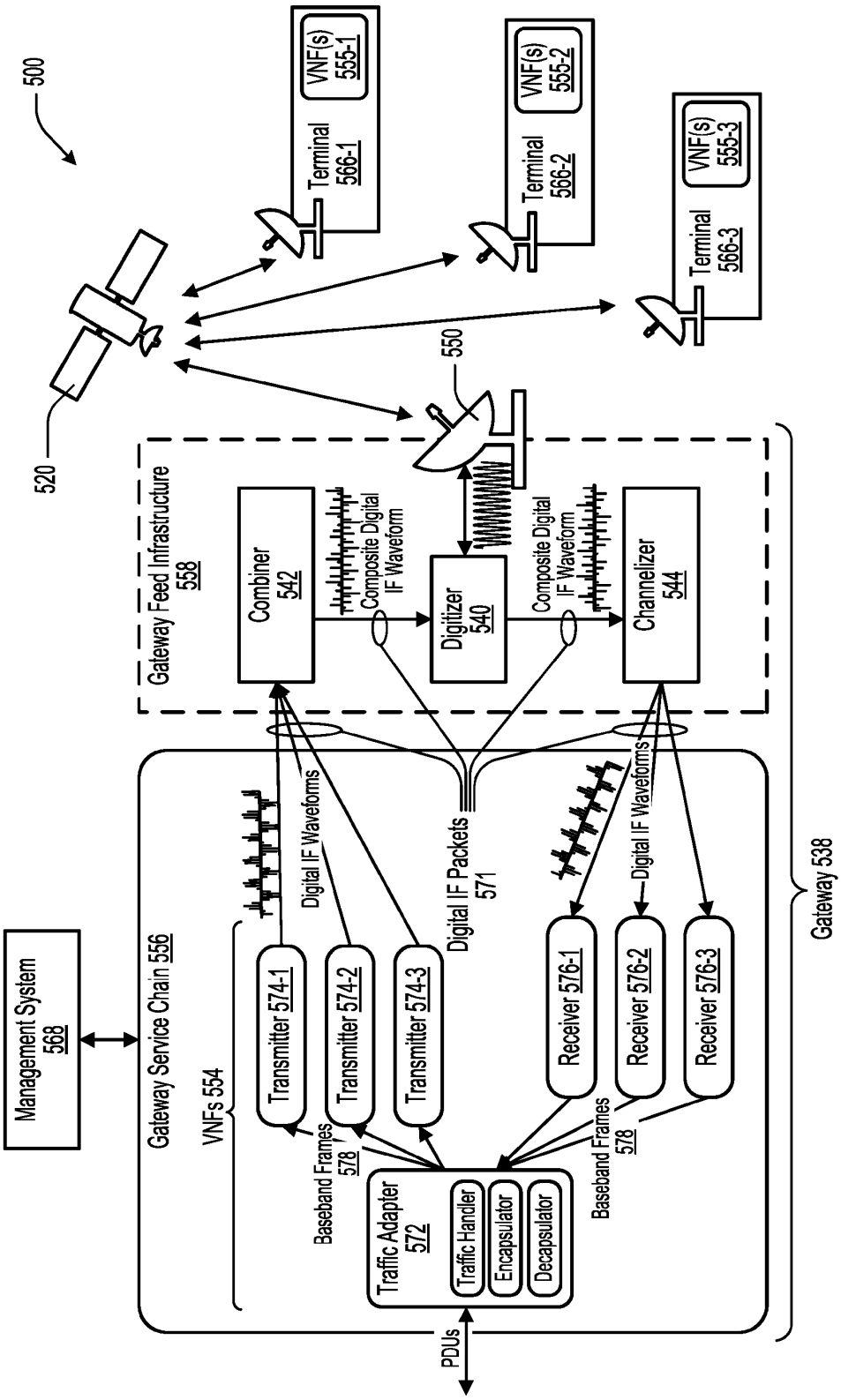
500
520
550
Terminal 566-1
VNF(s) 555-1
Terminal 566-2
VNF(s) 555-2
Terminal 566-3
VNF(s) 555-3
Gateway Feed Infrastructure 558
Combiner 542
Composite Digital IF Waveform
Digitizer 540
Composite Digital IF Waveform
Channelizer 544
Digital IF Packets 571
Digital IF Waveforms
Digital IF Waveforms
Management System 568
Gateway Service Chain 556
VNFs 554
Transmitter 574-1
Transmitter 574-2
Transmitter 574-3
Receiver 576-1
Receiver 576-2
Receiver 576-3
Baseband Frames 578
Baseband Frames 578
Traffic Adapter 572
Traffic Handler
Encapsulator
Decapsulator
PDUs
Gateway 538

FIG. 5

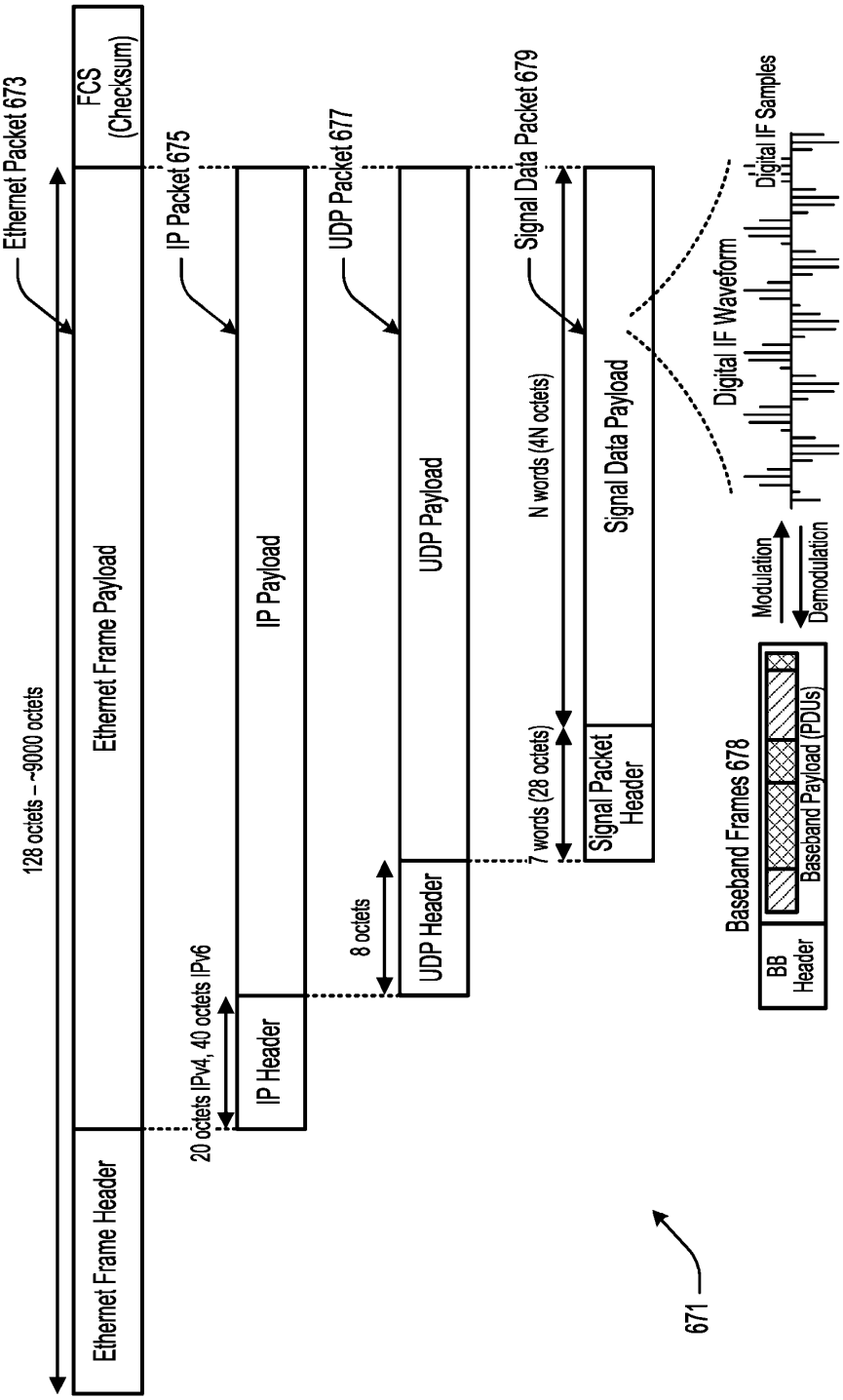
Ethernet Packet 673
FCS (Checksum)
Ethernet Frame Payload
Ethernet Frame Header
128 octets – ~9000 octets
IP Packet 675
IP Payload
IP Header
20 octets IPv4, 40 octets IPv6
UDP Packet 677
UDP Payload
UDP Header
8 octets
Signal Data Packet 679
N words (4N octets)
Signal Data Payload
Signal Packet Header
7 words (28 octets)
Digital IF Samples
Digital IF Waveform
Modulation
Demodulation
Baseband Frames 678
BB Header
Baseband Payload (PDUs)
671

FIG. 6

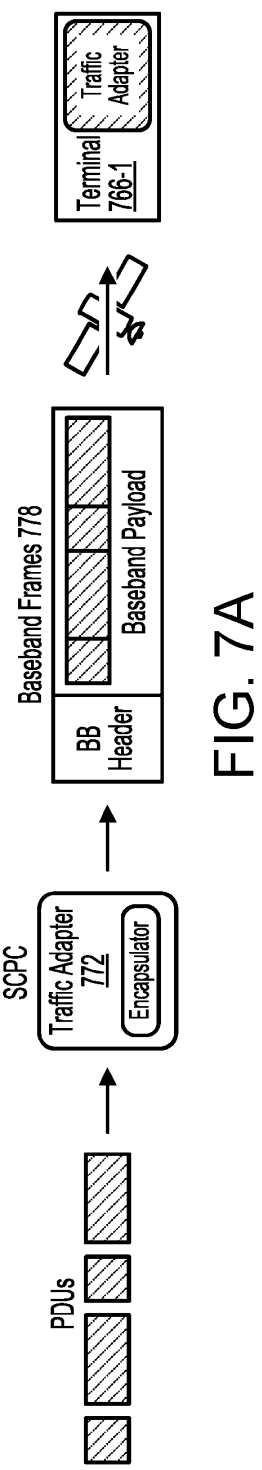

FIG. 7A

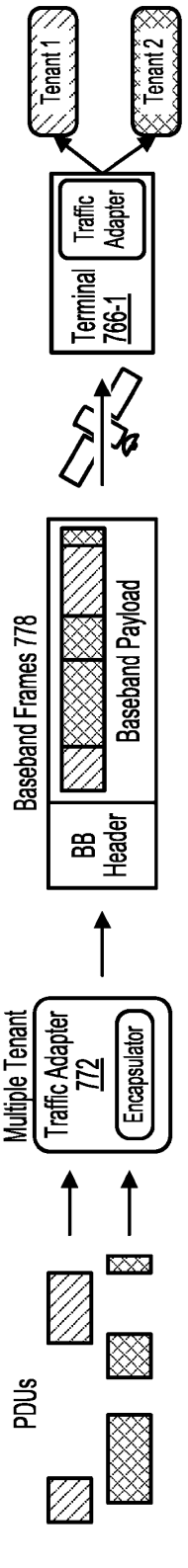

FIG. 7B

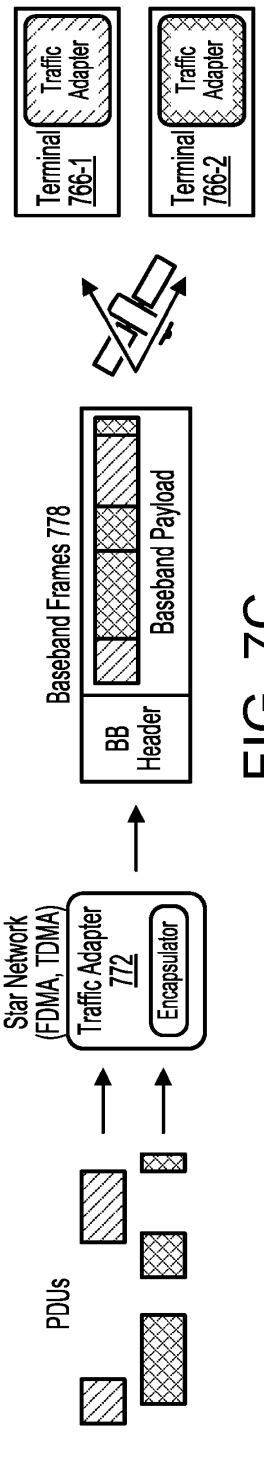

FIG. 7C

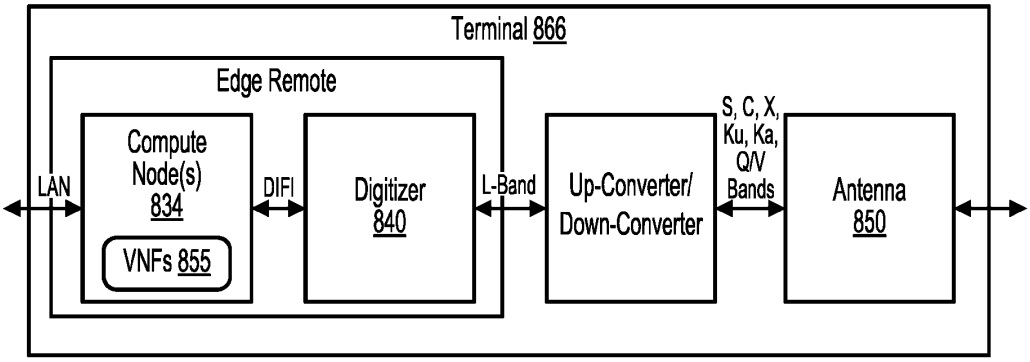

FIG. 8A

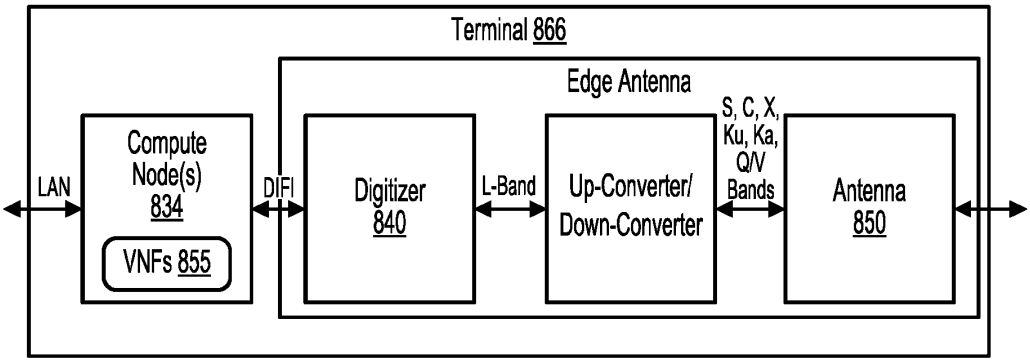

FIG. 8B

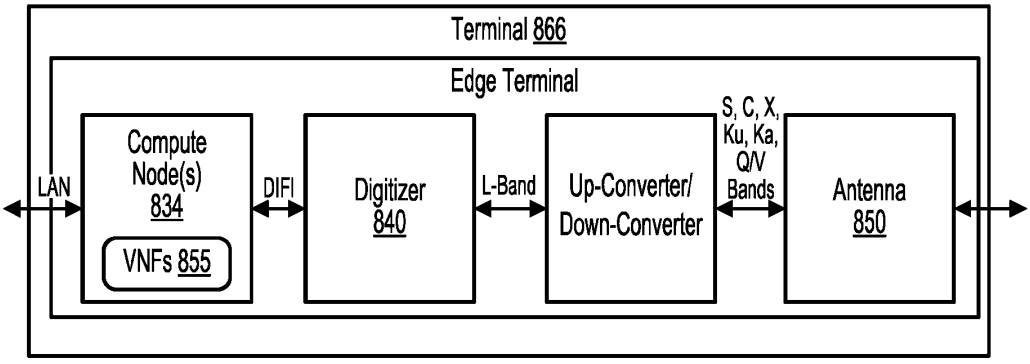

FIG. 8C

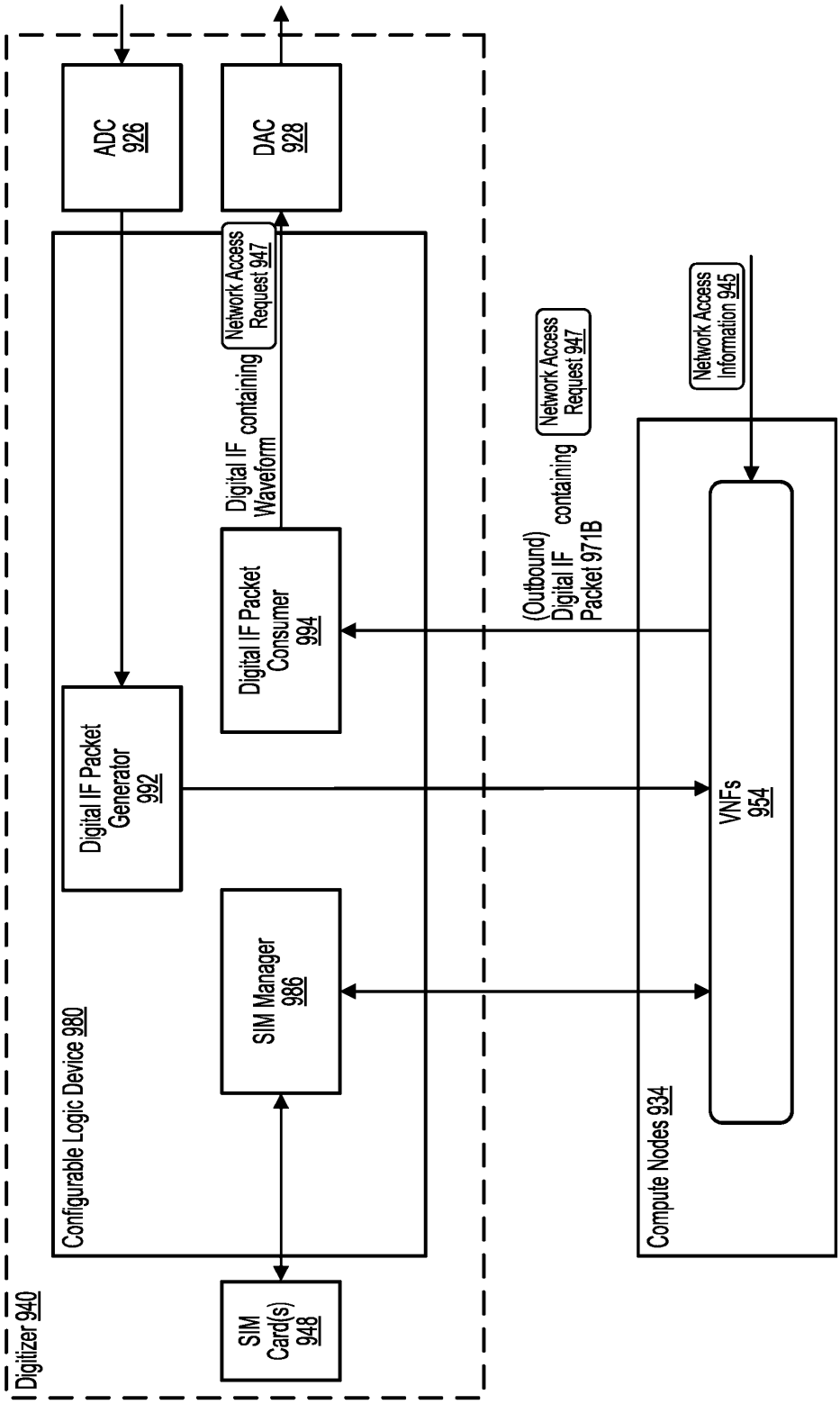
Digitizer 940
ADC 926
DAC 928
Configurable Logic Device 980
Digital IF Packet Generator 992
Digital IF Packet Consumer 994
SIM Manager 986
SIM Card(s) 948
Network Access Request 947
Digital IF containing Waveform
(Outbound) Digital IF Packet 971B containing Network Access Request 947
Network Access Information 945
Compute Nodes 934
VNFs 954

FIG. 9A

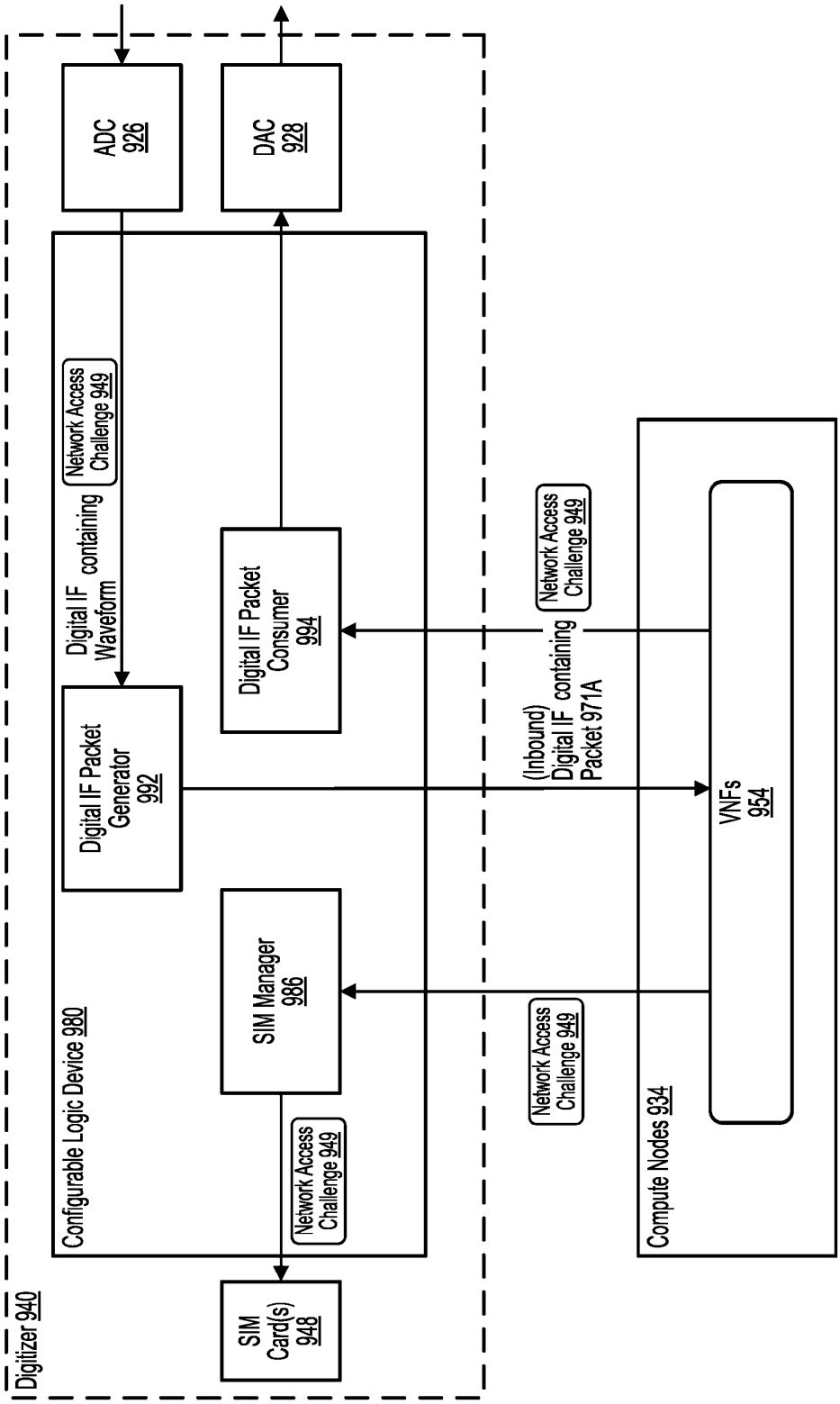
Digitizer 940
ADC 926
DAC 928
Configurable Logic Device 980
Digital IF containing Waveform
Network Access Challenge 949
Digital IF Packet Generator 992
Digital IF Packet Consumer 994
SIM Manager 986
Network Access Challenge 949
SIM Card(s) 948
(Inbound) Digital IF containing Packet 971A
Network Access Challenge 949
Network Access Challenge 949
Compute Nodes 934
VNFs 954

FIG. 9B

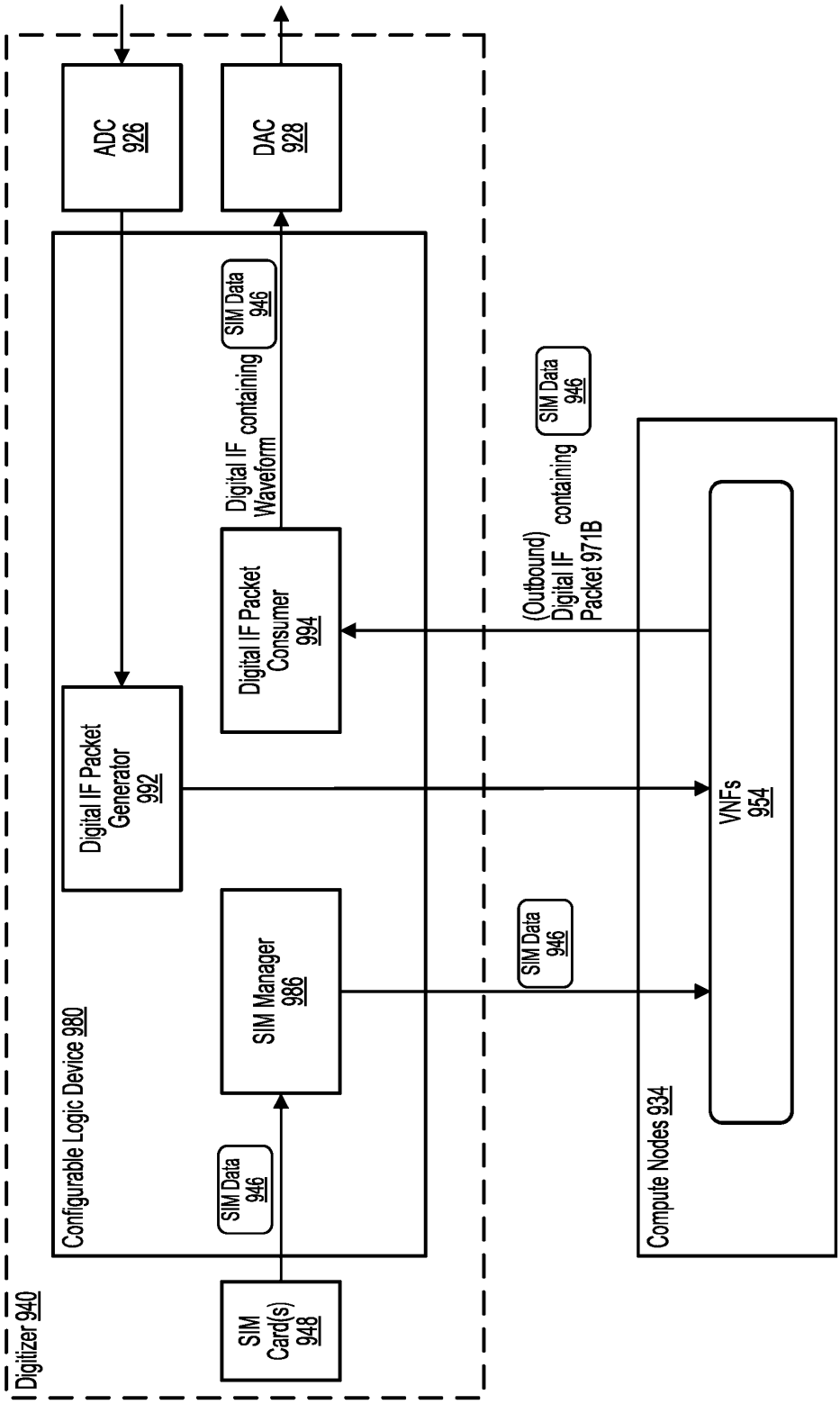
Digitizer 940
ADC 926
DAC 928
Configurable Logic Device 980
Digital IF Packet Generator 992
Digital IF Packet Consumer 994
SIM Manager 986
SIM Card(s) 948
SIM Data 946
SIM Data 946
SIM Data 946
SIM Data 946
Digital IF containing Waveform
(Outbound) Digital IF containing Packet 971B
Compute Nodes 934
VNFs 954

FIG. 9C

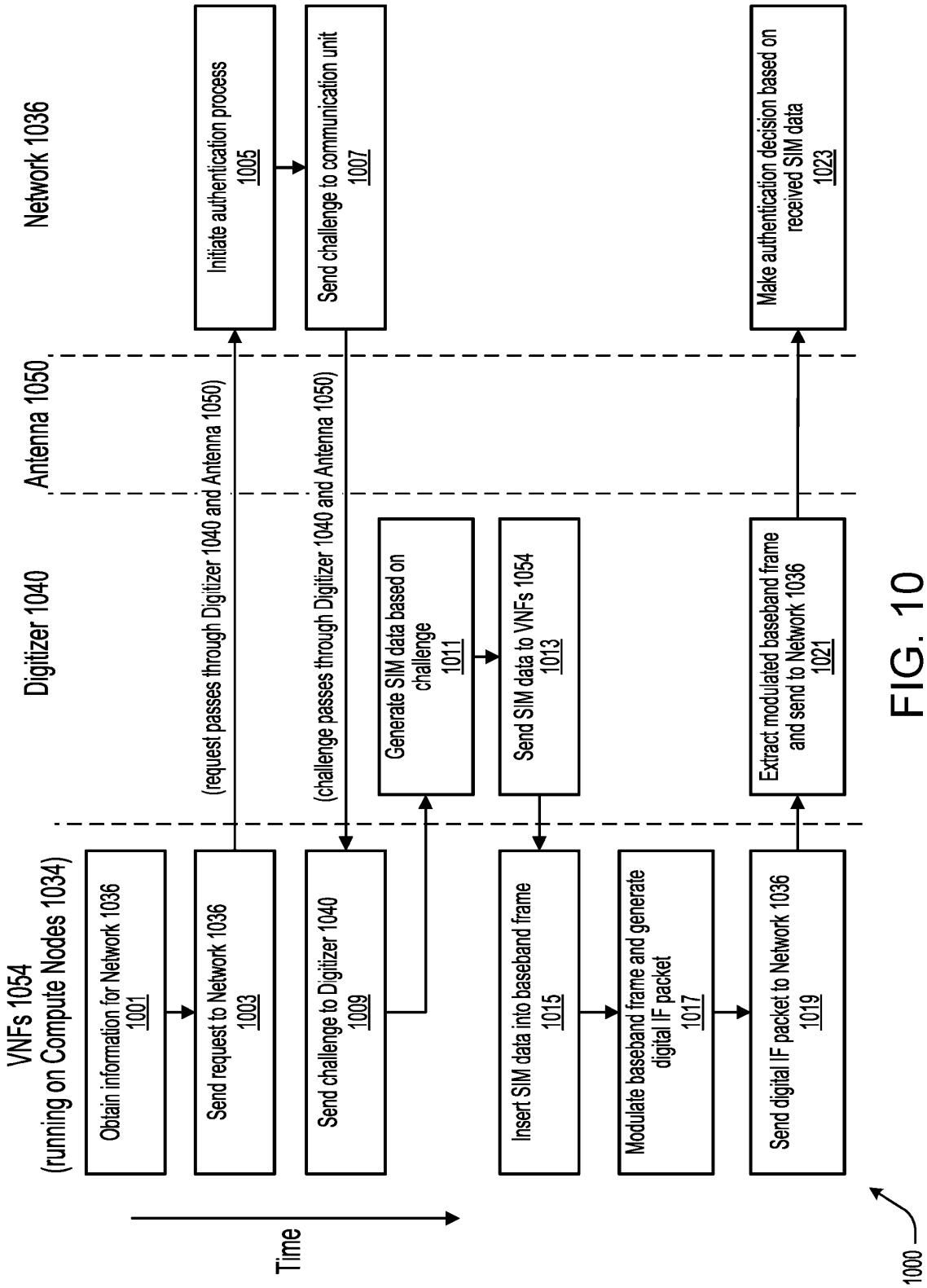
VNFs 1054
(running on Compute Nodes 1034)
Digitizer 1040
Antenna 1050
Network 1036
Obtain information for Network 1036
1001
Send request to Network 1036
1003
(request passes through Digitizer 1040 and Antenna 1050)
Initiate authentication process
1005
Send challenge to communication unit
1007
(challenge passes through Digitizer 1040 and Antenna 1050)
Send challenge to Digitizer 1040
1009
Generate SIM data based on challenge
1011
Send SIM data to VNFs 1054
1013
Insert SIM data into baseband frame
1015
Modulate baseband frame and generate digital IF packet
1017
Send digital IF packet to Network 1036
1019
Extract modulated baseband frame and send to Network 1036
1021
Make authentication decision based on received SIM data
1023
Time
1000

FIG. 10

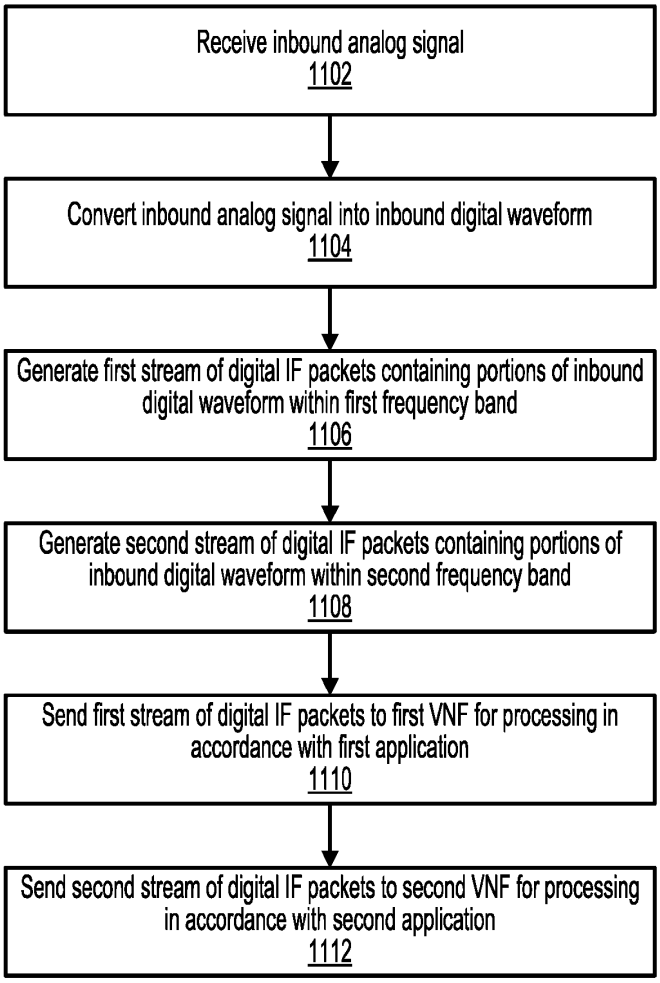
Receive inbound analog signal
1102
Convert inbound analog signal into inbound digital waveform
1104
Generate first stream of digital IF packets containing portions of inbound digital waveform within first frequency band
1106
Generate second stream of digital IF packets containing portions of inbound digital waveform within second frequency band
1108
Send first stream of digital IF packets to first VNF for processing in accordance with first application
1110
Send second stream of digital IF packets to second VNF for processing in accordance with second application
1112
1100

FIG. 11

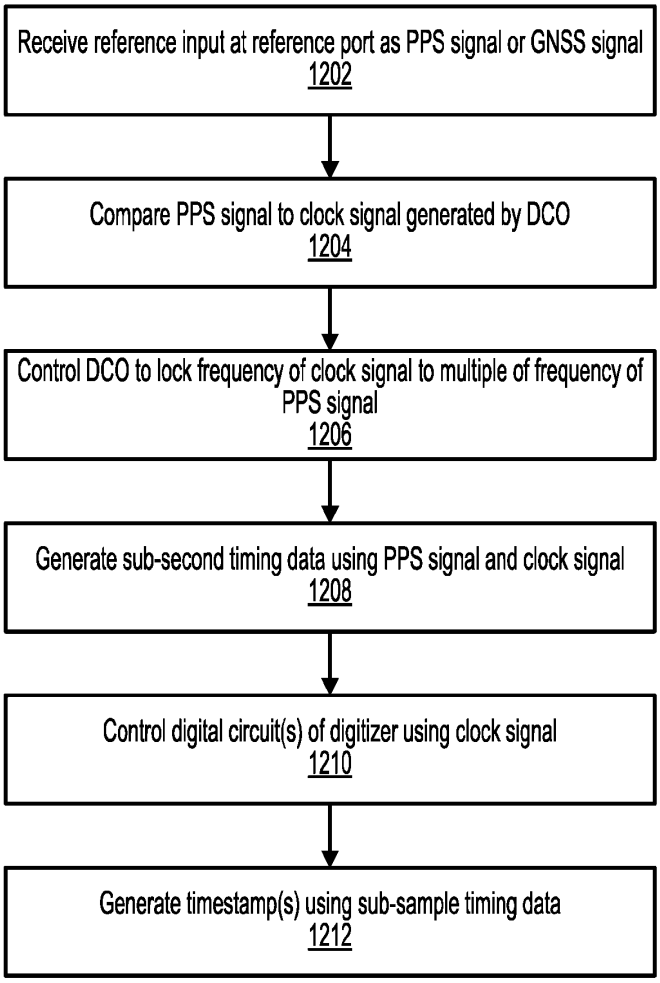
Receive reference input at reference port as PPS signal or GNSS signal
1202
Compare PPS signal to clock signal generated by DCO
1204
Control DCO to lock frequency of clock signal to multiple of frequency of PPS signal
1206
Generate sub-second timing data using PPS signal and clock signal
1208
Control digital circuit(s) of digitizer using clock signal
1210
Generate timestamp(s) using sub-sample timing data
1212
1200

FIG. 12

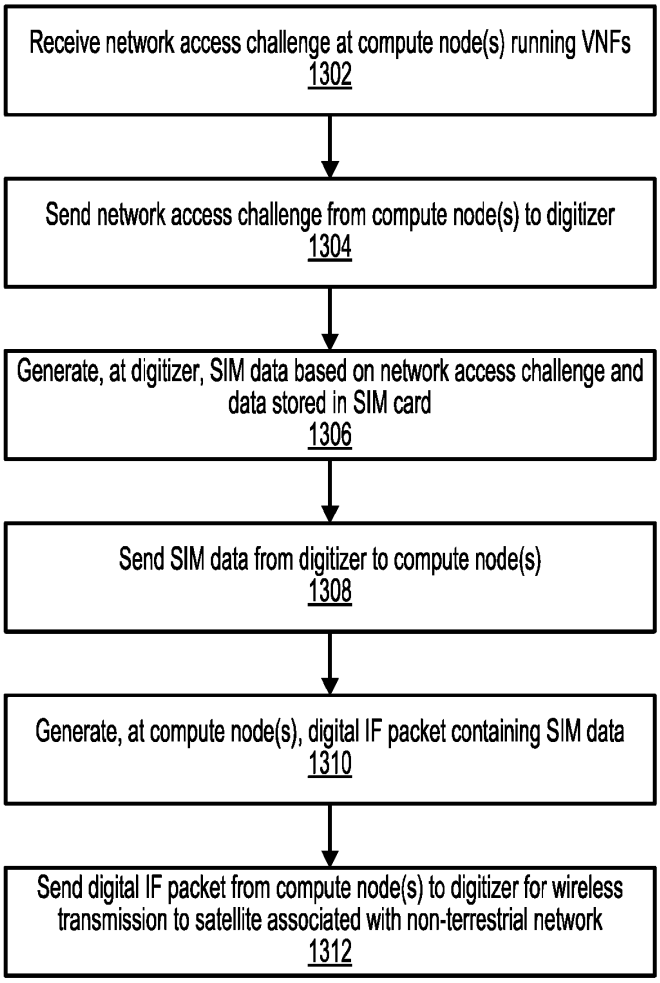
Receive network access challenge at compute node(s) running VNFs
1302
Send network access challenge from compute node(s) to digitizer
1304
Generate, at digitizer, SIM data based on network access challenge and data stored in SIM card
1306
Send SIM data from digitizer to compute node(s)
1308
Generate, at compute node(s), digital IF packet containing SIM data
1310
Send digital IF packet from compute node(s) to digitizer for wireless transmission to satellite associated with non-terrestrial network
1312
1300

FIG. 13

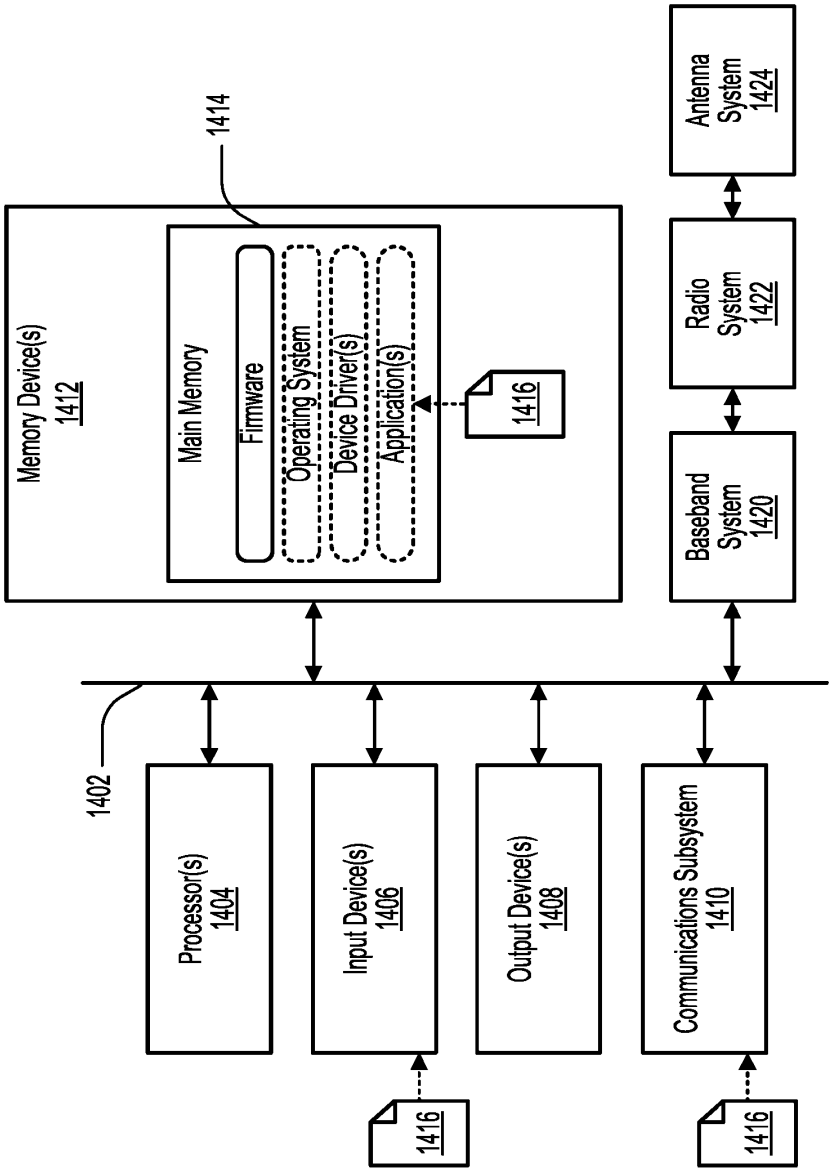
Memory Device(s)
1412
1414
Main Memory
Firmware
Operating System
Device Driver(s)
Application(s)
1416
Antenna System
1424
Radio System
1422
Baseband System
1420
1402
Processor(s)
1404
Input Device(s)
1406
Output Device(s)
1408
Communications Subsystem
1410
1416
1416
1400

FIG. 14