(12) INTERNATIONAL APPLICATION PUBLISHED UNDER THE PATENT COOPERATION TREATY (PCT)

(19) World Intellectual Property Organization
International Bureau

(43) International Publication Date
10 June 2010 (10.06.2010)

PCT

(10) International Publication Number
WO 2010/065201 A1

(51) International Patent Classification:
G02B 9/06 (2006.01) *G02B 25/00* (2006.01)

(21) International Application Number:
PCT/US2009/061140

(22) International Filing Date:
19 October 2009 (19.10.2009)

(25) Filing Language: English

(26) Publication Language: English

(30) Priority Data:
12/277,761 25 November 2008 (25.11.2008) US

(71) Applicant *(for all designated States except US)*: **ITT MANUFACTURING ENTERPRISES, INC.** [US/US]; 1105 N. Market Street, Suite 1217, Wilmington, DE 19801 (US).

(72) Inventors; and

(75) Inventors/Applicants *(for US only)*: **JANECZKO, Donald** [US/US]; 350 Pond Road, Fincastle, VA 24090 (US). **HALL, John, Michael** [US/US]; 103 Christian Hill Road, Amherst, NH 03031 (US).

(74) Agent: **JANKOVITZ, Jack, J.**; RatnerPrestia, P.O.Box 980, Valley Forge, PA 19482 (US).

(81) Designated States *(unless otherwise indicated, for every kind of national protection available)*: AE, AG, AL, AM, AO, AT, AU, AZ, BA, BB, BG, BH, BR, BW, BY, BZ, CA, CH, CL, CN, CO, CR, CU, CZ, DE, DK, DM, DO, DZ, EC, EE, EG, ES, FI, GB, GD, GE, GH, GM, GT, HN, HR, HU, ID, IL, IN, IS, JP, KE, KG, KM, KN, KP, KR, KZ, LA, LC, LK, LR, LS, LT, LU, LY, MA, MD, ME, MG, MK, MN, MW, MX, MY, MZ, NA, NG, NI, NO, NZ, OM, PE, PG, PH, PL, PT, RO, RS, RU, SC, SD, SE, SG, SK, SL, SM, ST, SV, SY, TJ, TM, TN, TR, TT, TZ, UA, UG, US, UZ, VC, VN, ZA, ZM, ZW.

(84) Designated States *(unless otherwise indicated, for every kind of regional protection available)*: ARIPO (BW, GH, GM, KE, LS, MW, MZ, NA, SD, SL, SZ, TZ, UG, ZM, ZW), Eurasian (AM, AZ, BY, KG, KZ, MD, RU, TJ, TM), European (AT, BE, BG, CH, CY, CZ, DE, DK, EE, ES, FI, FR, GB, GR, HR, HU, IE, IS, IT, LT, LU, LV, MC, MK, MT, NL, NO, PL, PT, RO, SE, SI, SK, SM, TR), OAPI (BF, BJ, CF, CG, CI, CM, GA, GN, GQ, GW, ML, MR, NE, SN, TD, TG).

Declarations under Rule 4.17:

— *as to applicant's entitlement to apply for and be granted a patent (Rule 4.17(ii))*

Published:

— *with international search report (Art. 21(3))*

(54) Title: FLAT FIELD EYEPIECE

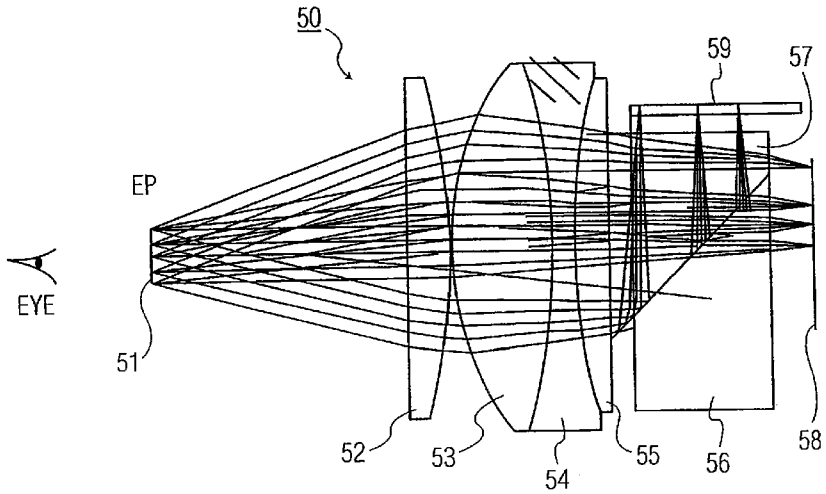

FIG. 5

(57) Abstract: A lens system includes a first lens axially aligned with a second lens, where the first and second lenses are configured to be sequentially positioned from a pupil image of a viewer. The second lens is formed as a triplet having three cemented elements. The second lens includes a convex surface facing the first lens, and a flat surface opposing the convex surface of the second lens. The first lens includes a concave surface opposing a flat surface of the first lens; the second lens includes a concave surface and a convex surface; and the concave surface of the first lens and the concave and convex surfaces of the second lens have equal radii of curvatures.

WO 2010/065201 A1