(12) INTERNATIONAL APPLICATION PUBLISHED UNDER THE PATENT COOPERATION TREATY (PCT)

(19) World Intellectual Property Organization
International Bureau

(43) International Publication Date
04 October 2018 (04.10.2018)

WIPO | PCT

(10) International Publication Number
WO 2018/182533 A1

(51) International Patent Classification:
C12M 3/00 (2006.01) *C12M 1/00* (2006.01)

(21) International Application Number:
PCT/SG2018/050162

(22) International Filing Date:
29 March 2018 (29.03.2018)

(25) Filing Language: English

(26) Publication Language: English

(30) Priority Data:
10201702629Q 30 March 2017 (30.03.2017) SG

(71) Applicant: **AGENCY FOR SCIENCE, TECHNOLOGY AND RESEARCH** [SG/SG]; 1 Fusionopolis Way, #20-10, Connexis, Singapore 138632 (SG).

(72) Inventors: **WIN NAING, May**; c/o SINGAPORE INSTITUTE OF MANUFACTURING TECHNOLOGY, 2 Fusionopolis Way, #08-04, Innovis, Singapore 138634 (SG). **LIU, Dan**; c/o SINGAPORE INSTITUTE OF MANUFACTURING TECHNOLOGY, 2 Fusionopolis Way, #08-04, Innovis, Singapore 138634 (SG). **AHMAD AMIRUL, Abdul Rahim**; c/o SINGAPORE INSTITUTE OF MANUFACTURING TECHNOLOGY, 2 Fusionopolis Way, #08-04, Innovis, Singapore 138634 (SG). **CHOUDHURY, Deepak**; c/o SINGAPORE INSTITUTE OF MANUFACTURING TECHNOLOGY, 2 Fusionopolis Way, #08-04, Innovis, Singapore 138634 (SG).

(74) Agent: **YUSARN AUDREY**; 24 Raffles Place #27-01 Clifford Centre, Singapore 048621 (SG).

(81) Designated States *(unless otherwise indicated, for every kind of national protection available)*: AE, AG, AL, AM, AO, AT, AU, AZ, BA, BB, BG, BH, BN, BR, BW, BY, BZ, CA, CH, CL, CN, CO, CR, CU, CZ, DE, DJ, DK, DM, DO, DZ, EC, EE, EG, ES, FI, GB, GD, GE, GH, GM, GT, HN, HR, HU, ID, IL, IN, IR, IS, JO, JP, KE, KG, KH, KN, KP, KR, KW, KZ, LA, LC, LK, LR, LS, LU, LY, MA, MD, ME, MG, MK, MN, MW, MX, MY, MZ, NA, NG, NI, NO, NZ, OM, PA, PE, PG, PH, PL, PT, QA, RO, RS, RU, RW, SA, SC, SD, SE, SG, SK, SL, SM, ST, SV, SY, TH, TJ, TM, TN, TR, TT, TZ, UA, UG, US, UZ, VC, VN, ZA, ZM, ZW.

(84) Designated States *(unless otherwise indicated, for every kind of regional protection available)*: ARIPO (BW, GH, GM, KE, LR, LS, MW, MZ, NA, RW, SD, SL, ST, SZ, TZ, UG, ZM, ZW), Eurasian (AM, AZ, BY, KG, KZ, RU, TJ, TM), European (AL, AT, BE, BG, CH, CY, CZ, DE, DK, EE, ES, FI, FR, GB, GR, HR, HU, IE, IS, IT, LT, LU, LV,

(54) Title: DEVICE FOR CELL CULTURE AND METHOD FOR CULTURING CELLS

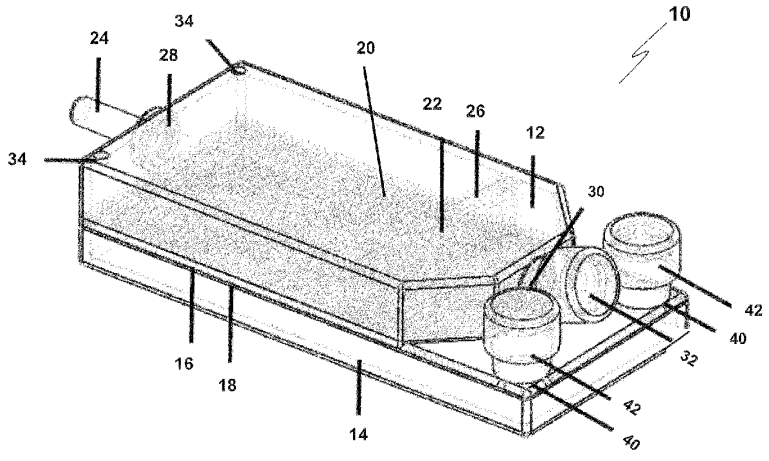

Figure 1a

(57) Abstract: Disclosed is a device for cell culture, the device includes a first chamber having an area for containing cells, such as isolated cells, for growth; a second chamber for containing culture medium; a semi permeable membrane forming at least part of a divider between the first chamber and the second chamber; wherein the area for containing cells for growth is adjustable via a moveable wall disposed within the first chamber. The device is especially suited for culturing of semi-adherent and non¬ adherent cells.

WO 2018/182533 A1

[Continued on next page]

MC, MK, MT, NL, NO, PL, PT, RO, RS, SE, SI, SK, SM, TR), OAPI (BF, BJ, CF, CG, CI, CM, GA, GN, GQ, GW, KM, ML, MR, NE, SN, TD, TG).

Declarations under Rule 4.17:

— *of inventorship (Rule 4.17(iv))*

Published:

— *with international search report (Art. 21(3))*