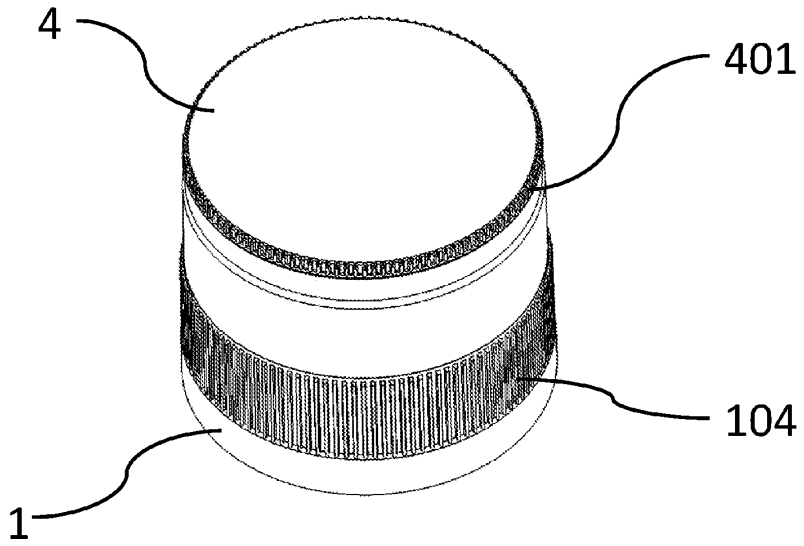

FIG. 1

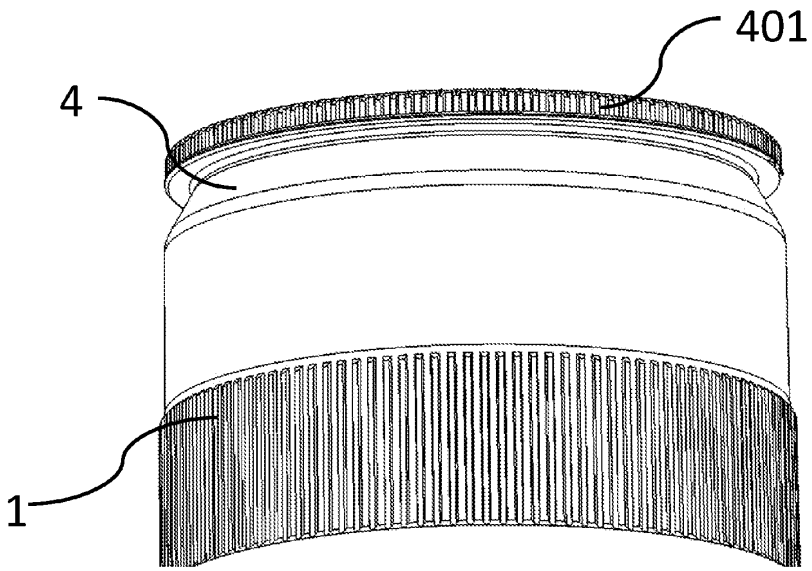

FIG. 2

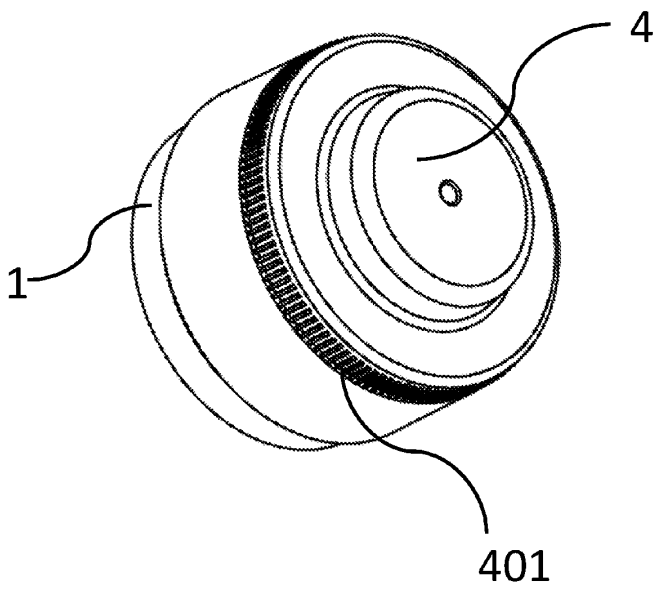

FIG. 3

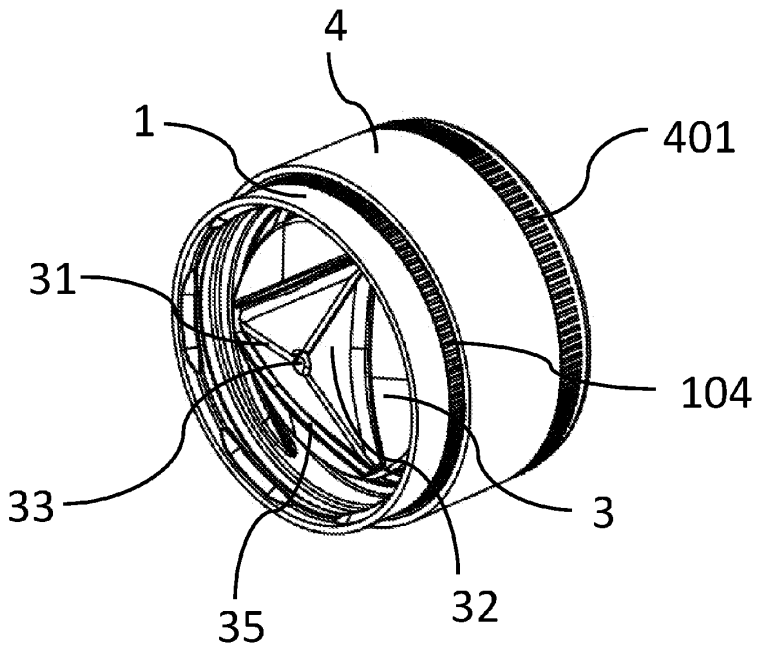

FIG. 4

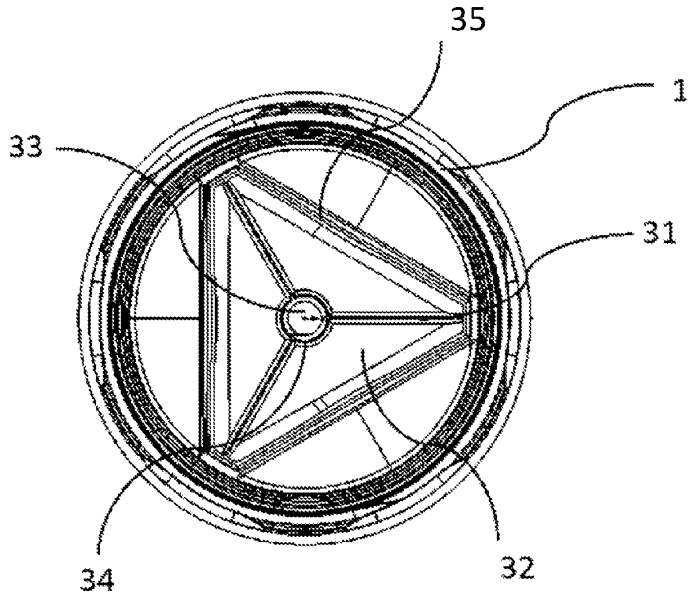

FIG. 5

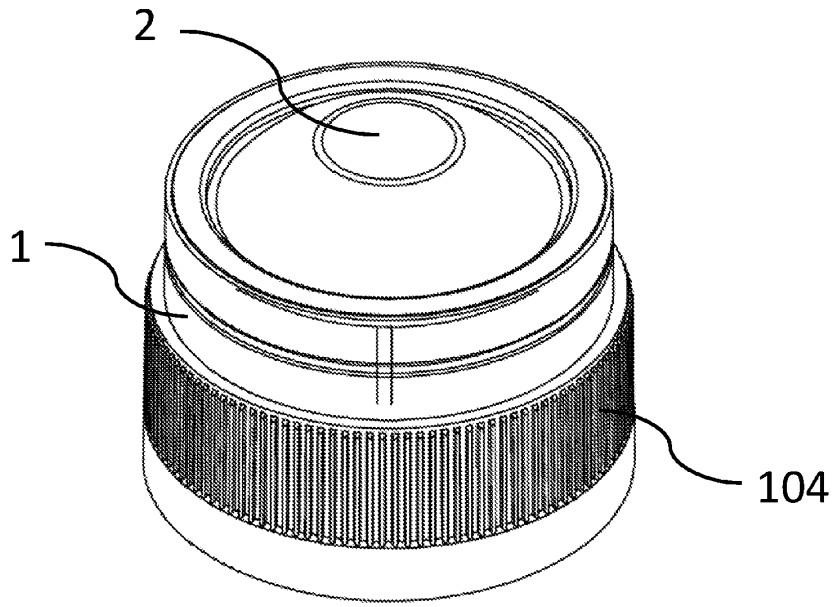

FIG. 6

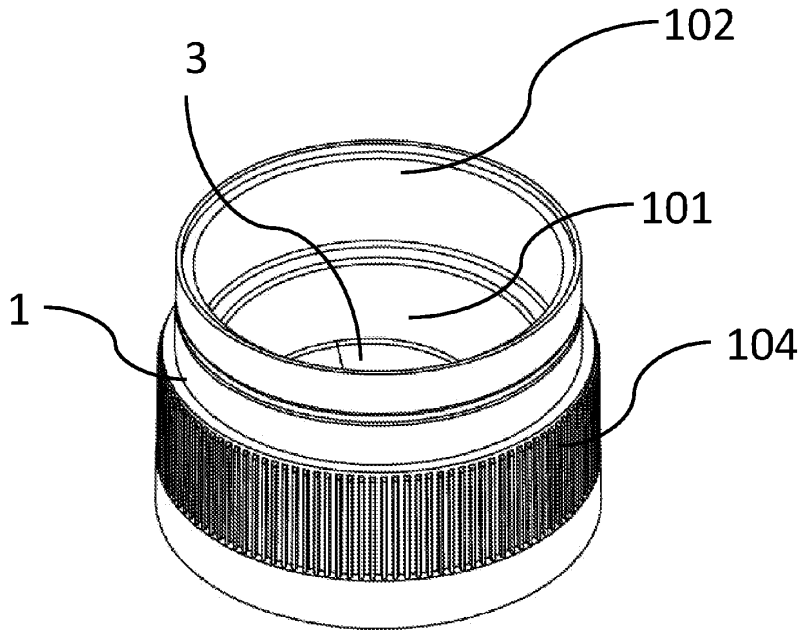

FIG. 7

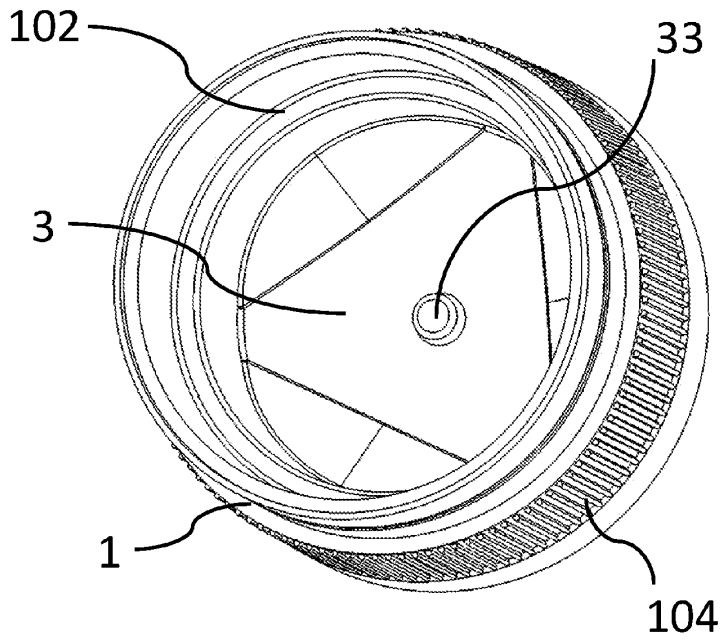

FIG. 8

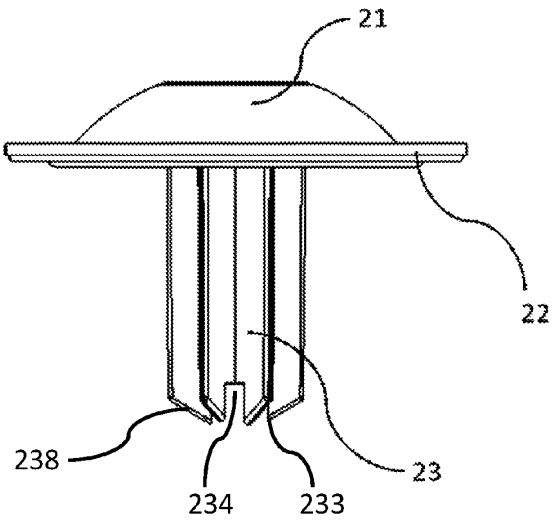

FIG. 9

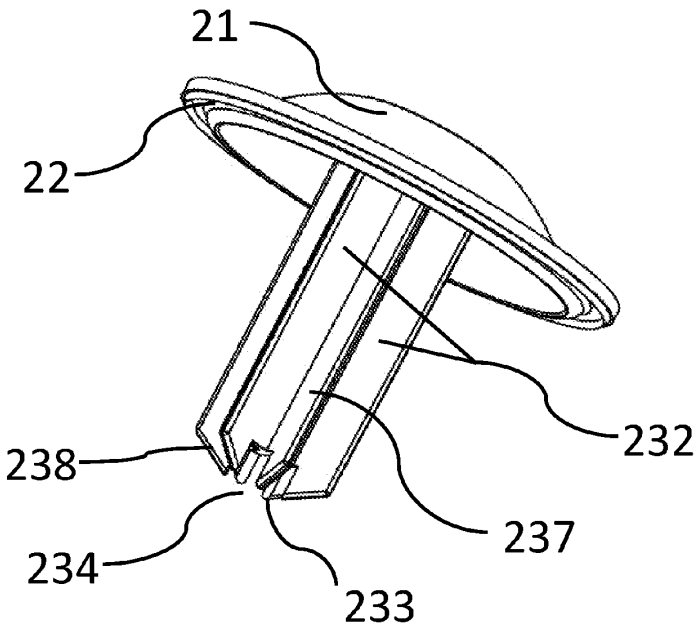

FIG. 10

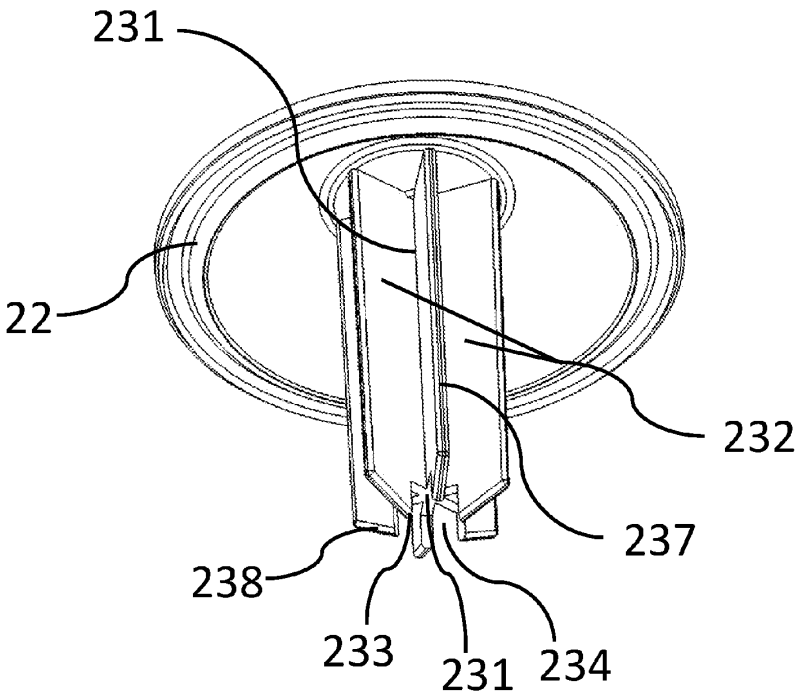

FIG. 11

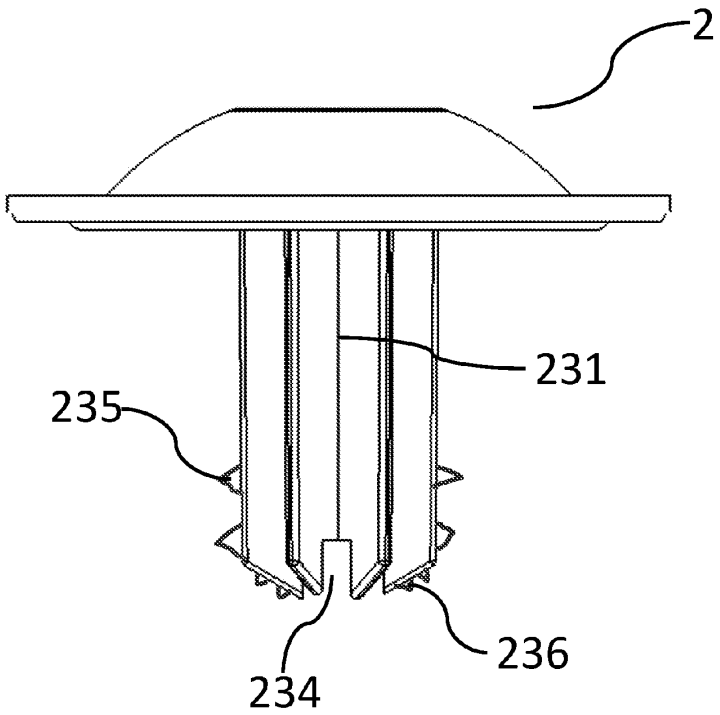

FIG. 12

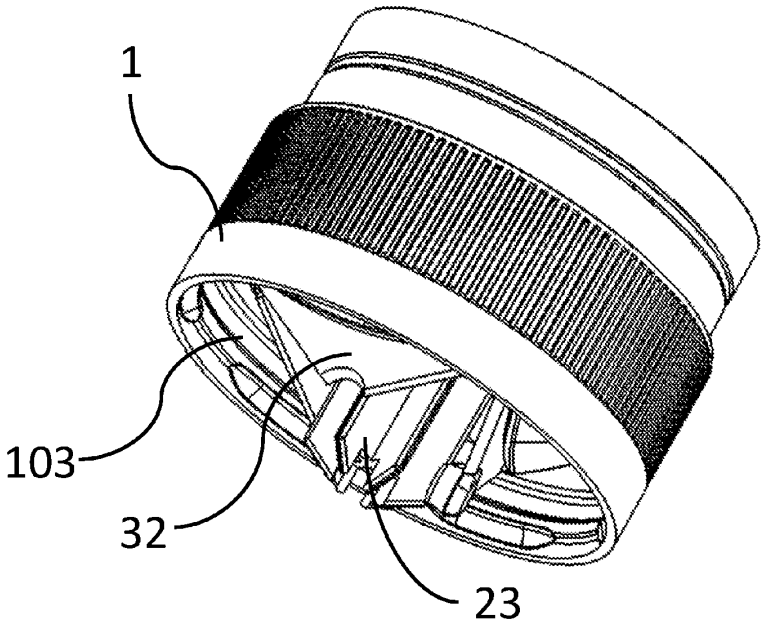

FIG. 13

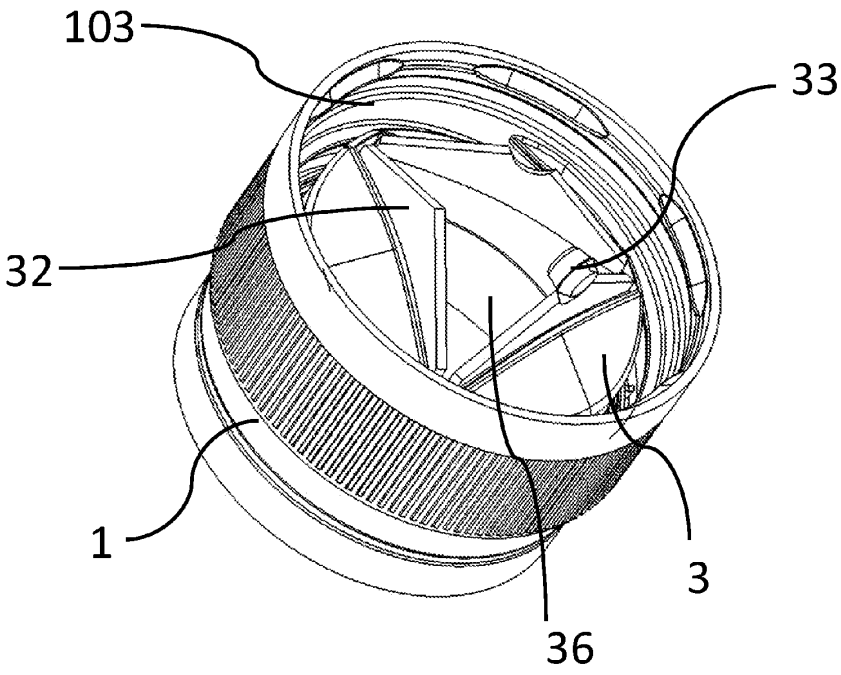

FIG. 14

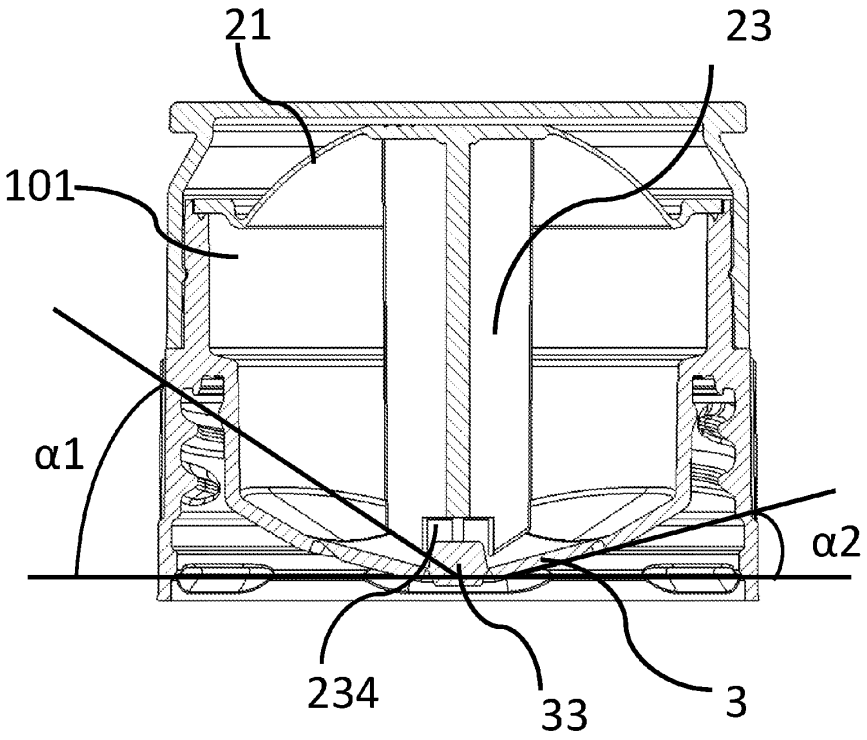

FIG. 15

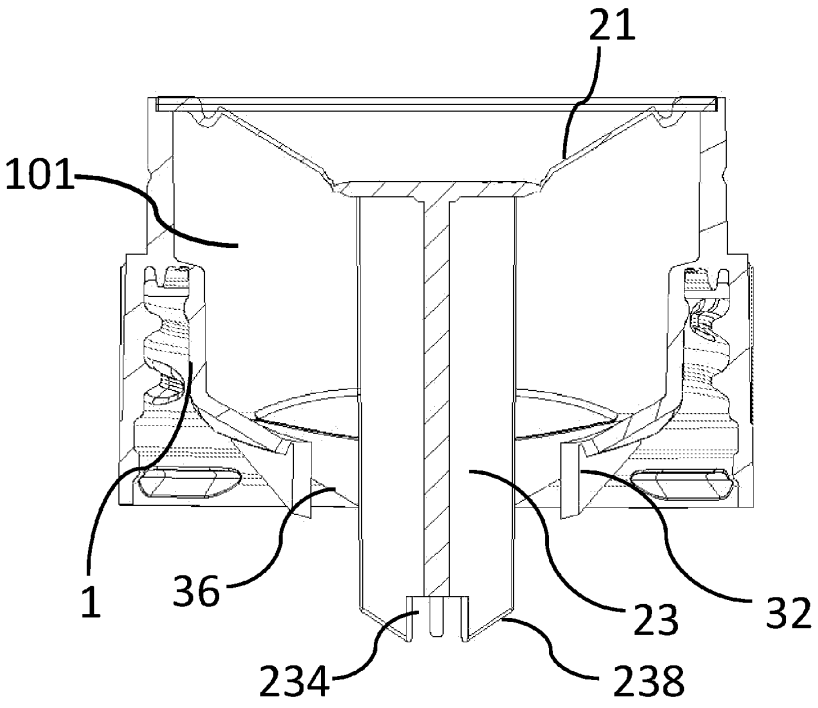

FIG. 16

INTERNATIONAL SEARCH REPORT

International application No. PCT/SG2025/050146

PCT/SG2025/050146

A. CLASSIFICATION OF SUBJECT MATTER

B65D 51/28 (2006.01)

According to International Patent Classification (IPC)

B. FIELDS SEARCHED

Minimum documentation searched (classification system followed by classification symbols)

B65D

Documentation searched other than minimum documentation to the extent that such documents are included in the fields searched

Electronic data base consulted during the international search (name of data base and, where practicable, search terms used)

FAMPAT: dispensing, bottle, cap, lid, closure, cover, press, push, depress, stress, shaft, post, column, pole, pillar, rupture, break, tear, cut, pierce, rib, flap, and related search terms

C. DOCUMENTS CONSIDERED TO BE RELEVANT

Category*	Citation of document, with indication, where appropriate, of the relevant passages	Relevant to claim No.
A	US 2015/0144511 A1 (HAMWAY, E., ET AL.) 28 May 2015 paragraphs [0025], [0027], [0028]; figs. 1-3	1-13
A	CN 109292249 A (SUZHOU XINLIDE MEDICAL EQUIPMENT TECH CO LTD) 1 February 2019 paragraphs [0017] and [0018] of the machine translation; figures 1-9	-
A	US 2011/0174642 A1 (COON, D.) 21 July 2011 abstract; paragraphs [0174]-[0194]; figures 1-17	-

☐ Further documents are listed in the continuation of Box C. ☒ See patent family annex.

*Special categories of cited documents:

"A" document defining the general state of the art which is not considered to be of particular relevance

"D" document cited by the applicant in the international application

"E" earlier application or patent but published on or after the international filing date

"L" document which may throw doubts on priority claim(s) or which is cited to establish the publication date of another citation or other special reason (as specified)

"O" document referring to an oral disclosure, use, exhibition or other means

"P" document published prior to the international filing date but later than the priority date claimed

"T" later document published after the international filing date or priority date and not in conflict with the application but cited to understand the principle or theory underlying the invention

"X" document of particular relevance; the claimed invention cannot be considered novel or cannot be considered to involve an inventive step when the document is taken alone

"Y" document of particular relevance; the claimed invention cannot be considered to involve an inventive step when the document is combined with one or more other such documents, such combination being obvious to a person skilled in the art

"&" document member of the same patent family

Date of the actual completion of the international search	Date of mailing of the international search report
16/06/2025 *(day/month/year)*	18/06/2025 *(day/month/year)*

Name and mailing address of the ISA/SG	Authorized officer
Intellectual Property Office of Singapore 1 Paya Lebar Link, #11-03 PLQ 1, Paya Lebar Quarter Singapore 408533	Lee Yi Chau
Email: pct@ipos.gov.sg	IPOS Customer Service Tel. No.: (+65) 6339 8616

INTERNATIONAL SEARCH REPORT

Information on patent family members

International application No.
PCT/SG2025/050146

Note: This Annex lists known patent family members relating to the patent documents cited in this International Search Report. This Authority is in no way liable for these particulars which are merely given for the purpose of information.

Patent document cited in search report	Publication date	Patent family member(s)	Publication date
US 2015/0144511 A1	28/05/2015	NONE	
CN 109292249 A	01/02/2019	NONE	
US 2011/0174642 A1	21/07/2011	EP 2566785 A2	13/03/2013
		BR 112012027166 A2	11/07/2017
		WO 2011/133854 A2	27/10/2011
		MX 2012012162 A	05/03/2013
		JP 2013525222 A	20/06/2013
		CN 102947199 A	27/02/2013
		CA 2796878 A1	27/10/2011