(12) INTERNATIONAL APPLICATION PUBLISHED UNDER THE PATENT COOPERATION TREATY (PCT)

(19) World Intellectual Property Organization
International Bureau

(43) International Publication Date
10 May 2007 (10.05.2007)

PCT

(10) International Publication Number
WO 2007/052150 A1

(51) International Patent Classification:
H04B 7/06 (2006.01) *H04L 27/26* (2006.01)
H04B 7/08 (2006.01)

(21) International Application Number:
PCT/IB2006/003134

(22) International Filing Date:
7 November 2006 (07.11.2006)

(25) Filing Language: English

(26) Publication Language: English

(30) Priority Data:
60/734,080 7 November 2005 (07.11.2005) US
60/734,117 7 November 2005 (07.11.2005) US

(71) Applicant *(for all designated States except US)*: **AGENCY FOR SCIENCE, TECHNOLOGY AND RESEARCH** [SG/SG]; 20 Biopolis Way, #07-01 Centros, Singapore 138668 (SG).

(72) Inventors; and

(75) Inventors/Applicants *(for US only)*: **LIANG, Ying-Chang** [CN/SG]; c/o IPTO, Institute for Infocomm Research, 21 Heng Mui Keng Terrace, Singapore 119613 (SG). **WU, Yan** [CN/SG]; c/o IPTO, Institute for Infocomm Research, 21 Heng Mui Keng Terrace, Singapore 119613 (SG). **SUN, Sumei** [SG/SG]; c/o IPTO, Institute for Infocomm Research, 21 Heng Mui Keng Terrace, Singapore 119613 (SG). **CHIN, Woon, Hau** [SG/SG]; c/o IPTO, Institute for Infocomm Research, 21 Heng Mui Keng Terrace, Singapore 119613 (SG). **LEON, Wing-Seng** [SG/SG]; c/o IPTO, Institute for Infocomm Research, 21 Heng Mui Keng Terrace, Singapore 119613 (SG). **CHIN, Po Shin Francois** [SG/SG]; c/o IPTO, Institute for Infocomm Research, 21 Heng Mui Keng Terrace, Singapore 119613 (SG).

(74) Agent: **SCHIWECK, Wolfram**; Viering, Jentschura & Partner, P.O. Box 1088, Rochor Post Office, Rochor Road, Singapore 911833 (SG).

(81) Designated States *(unless otherwise indicated, for every kind of national protection available)*: AE, AG, AL, AM, AT, AU, AZ, BA, BB, BG, BR, BW, BY, BZ, CA, CH, CN, CO, CR, CU, CZ, DE, DK, DM, DZ, EC, EE, EG, ES, FI, GB, GD, GE, GH, GM, GT, HN, HR, HU, ID, IL, IN, IS, JP, KE, KG, KM, KN, KP, KR, KZ, LA, LC, LK, LR, LS, LT, LU, LV, LY, MA, MD, MG, MK, MN, MW, MX, MY, MZ, NA, NG, NI, NO, NZ, OM, PG, PH, PL, PT, RO, RS, RU, SC, SD, SE, SG, SK, SL, SM, SV, SY, TJ, TM, TN, TR, TT, TZ, UA, UG, US, UZ, VC, VN, ZA, ZM, ZW.

[Continued on next page]

(54) Title: METHOD AND SYSTEM FOR TRANSMITTING A SIGNAL TO A COMMUNICATION DEVICE IN A CELLULAR COMMUNICATION SYSTEM

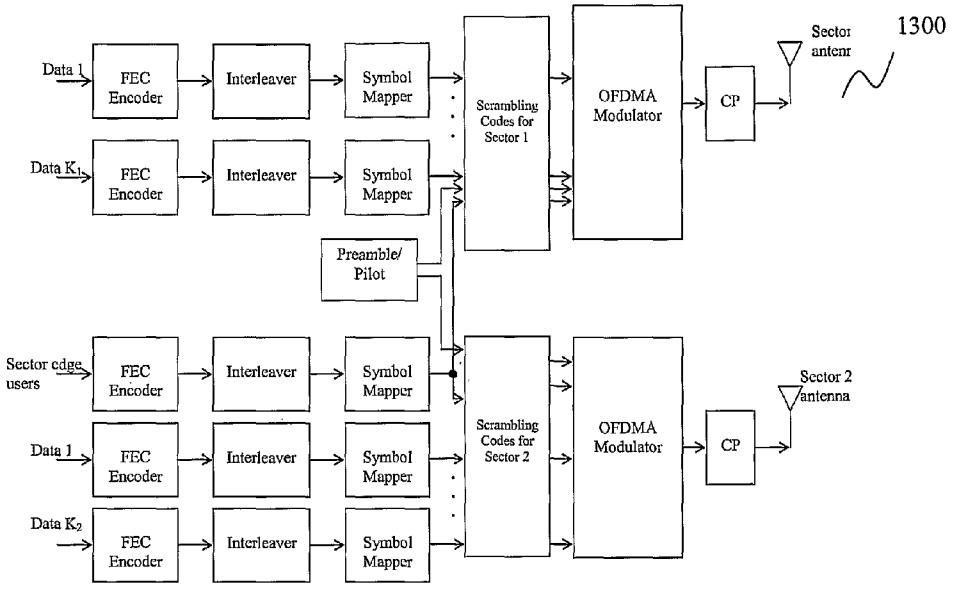

(57) Abstract: A method for transmitting a signal to a communication device in a cellular communication system is provided. The method comprises transmitting a signal using a first antenna being provided in a first sector of the cellular communication system, and transmitting another signal using a second antenna being provided in a second sector of the cellular communication system, wherein the first sector at least partially overlaps the second sector, wherein the signal transmitted by the second antenna is a cyclic delayed version of the signal transmitted by the first antenna.

WO 2007/052150 A1

(84) Designated States *(unless otherwise indicated, for every kind of regional protection available)*: ARIPO (BW, GH, GM, KE, LS, MW, MZ, NA, SD, SL, SZ, TZ, UG, ZM, ZW), Eurasian (AM, AZ, BY, KG, KZ, MD, RU, TJ, TM), European (AT, BE, BG, CH, CY, CZ, DE, DK, EE, ES, FI, FR, GB, GR, HU, IE, IS, IT, LT, LU, LV, MC, NL, PL, PT, RO, SE, SI, SK, TR), OAPI (BF, BJ, CF, CG, CI, CM, GA, GN, GQ, GW, ML, MR, NE, SN, TD, TG).

Published:

— *with international search report*

For two-letter codes and other abbreviations, refer to the "Guidance Notes on Codes and Abbreviations" appearing at the beginning of each regular issue of the PCT Gazette.