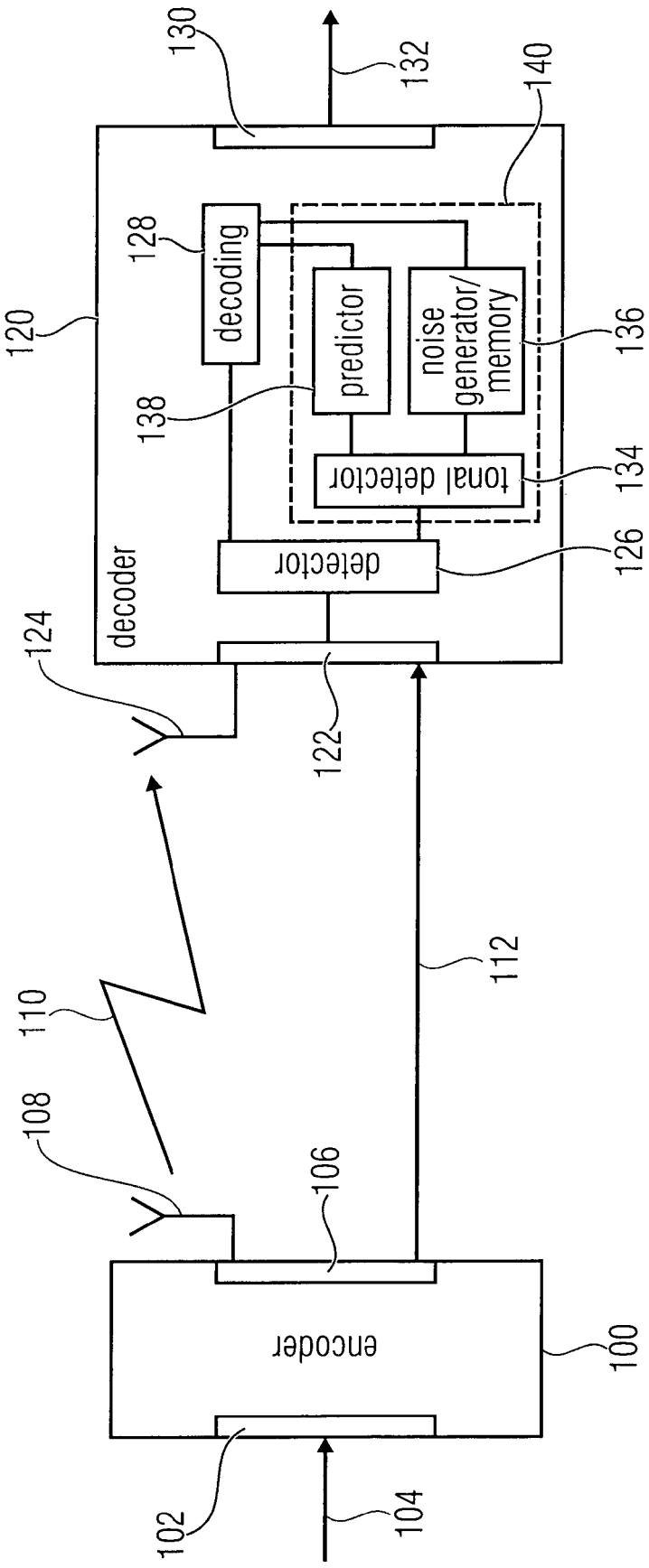
130
132
140
128
decoding
predictor
noise generator/ memory
136
120
138
tonal detector
134
detector
126
decoder
124
122
112
110
108
106
encoder
100
102
104

FIG 1

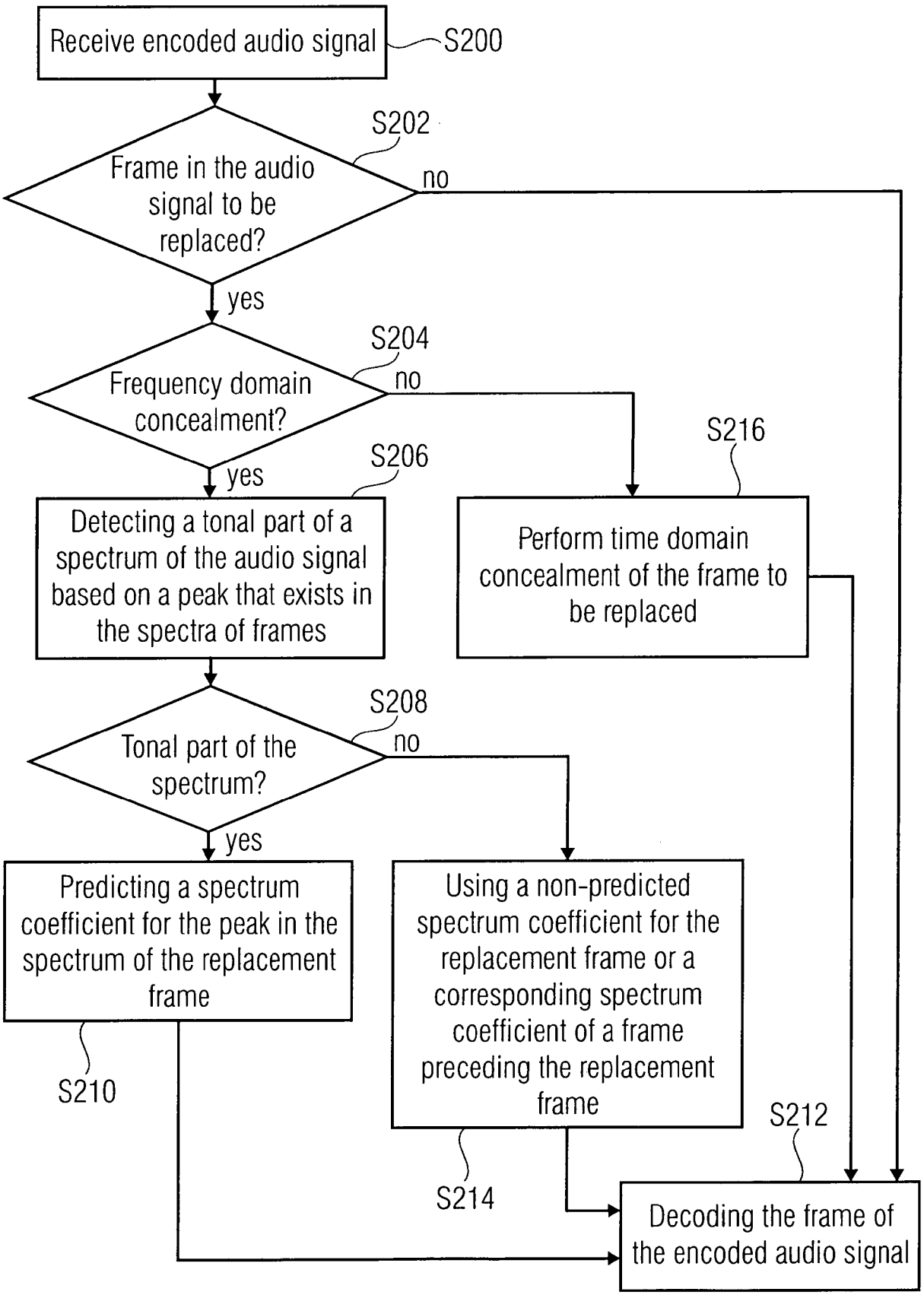
Receive encoded audio signal
S200
S202
Frame in the audio signal to be replaced?
no
yes
S204
Frequency domain concealment?
no
yes
S206
Detecting a tonal part of a spectrum of the audio signal based on a peak that exists in the spectra of frames
S216
Perform time domain concealment of the frame to be replaced
S208
Tonal part of the spectrum?
no
yes
Predicting a spectrum coefficient for the peak in the spectrum of the replacement frame
S210
Using a non-predicted spectrum coefficient for the replacement frame or a corresponding spectrum coefficient of a frame preceding the replacement frame
S214
S212
Decoding the frame of the encoded audio signal

FIG 2

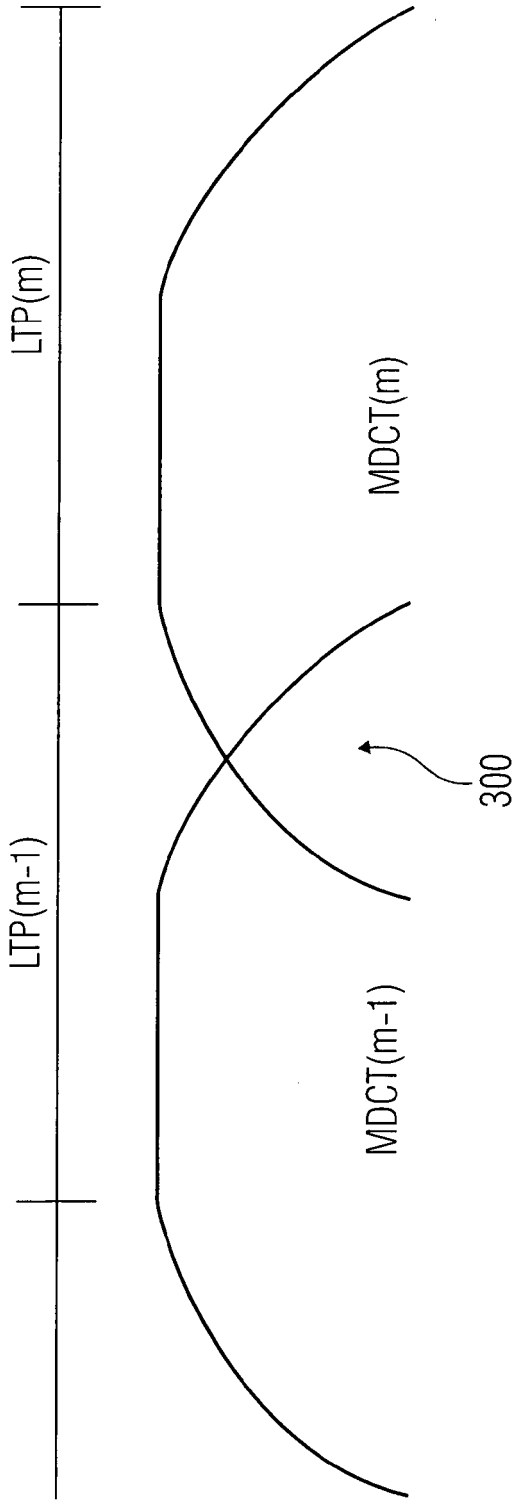

FIG 3

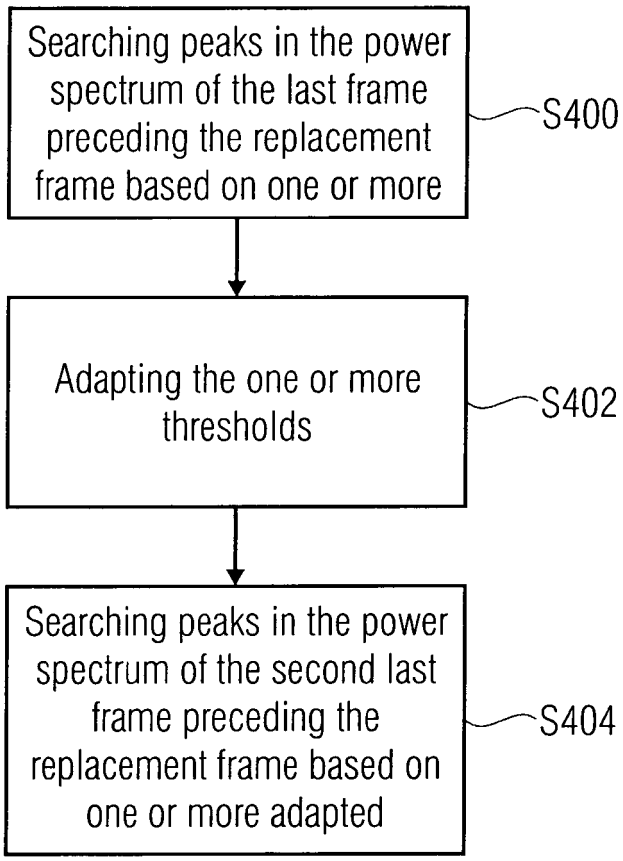
Searching peaks in the power spectrum of the last frame preceding the replacement frame based on one or more
S400
Adapting the one or more thresholds
S402
Searching peaks in the power spectrum of the second last frame preceding the replacement frame based on one or more adapted
S404

FIG 4

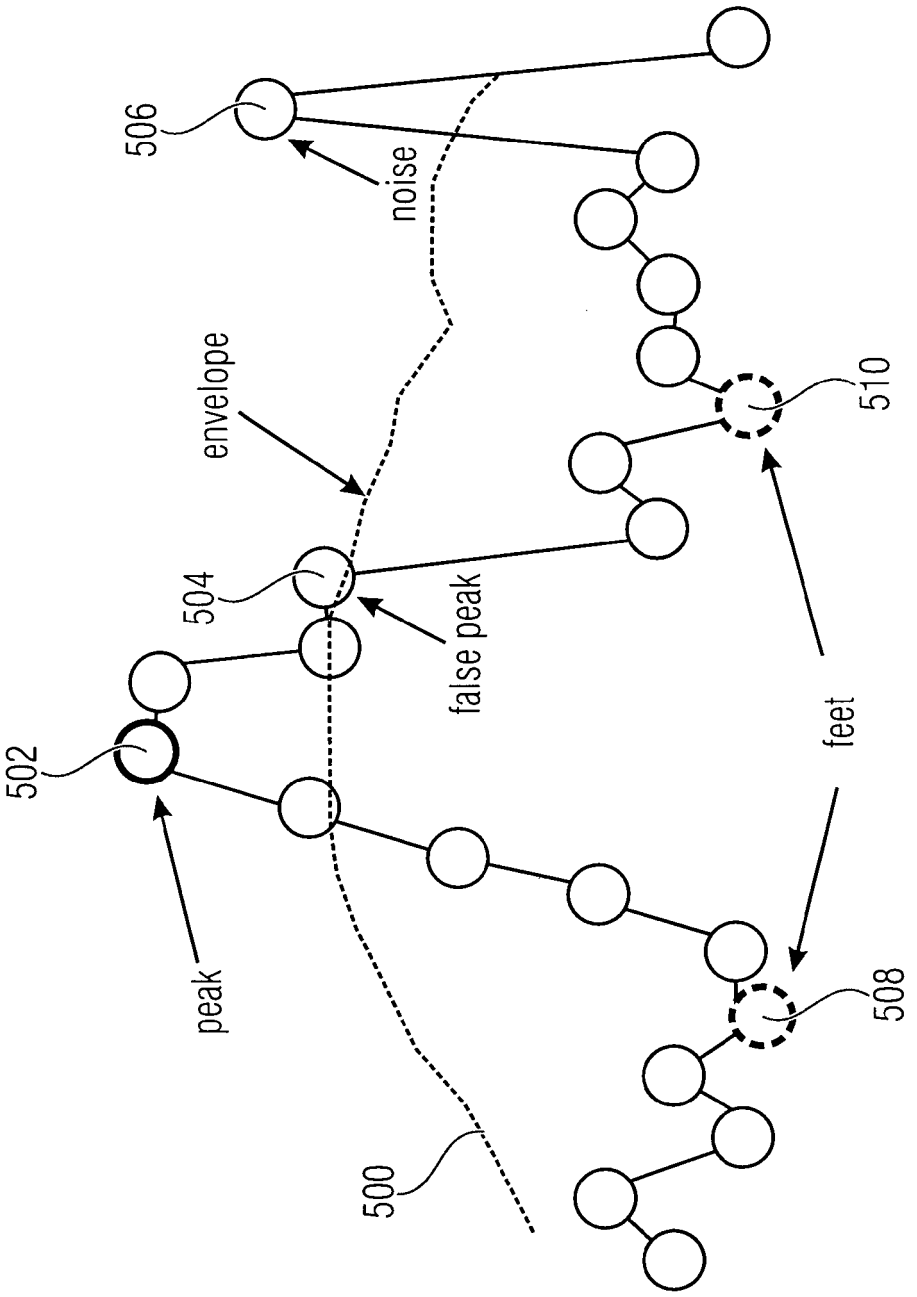

FIG 5

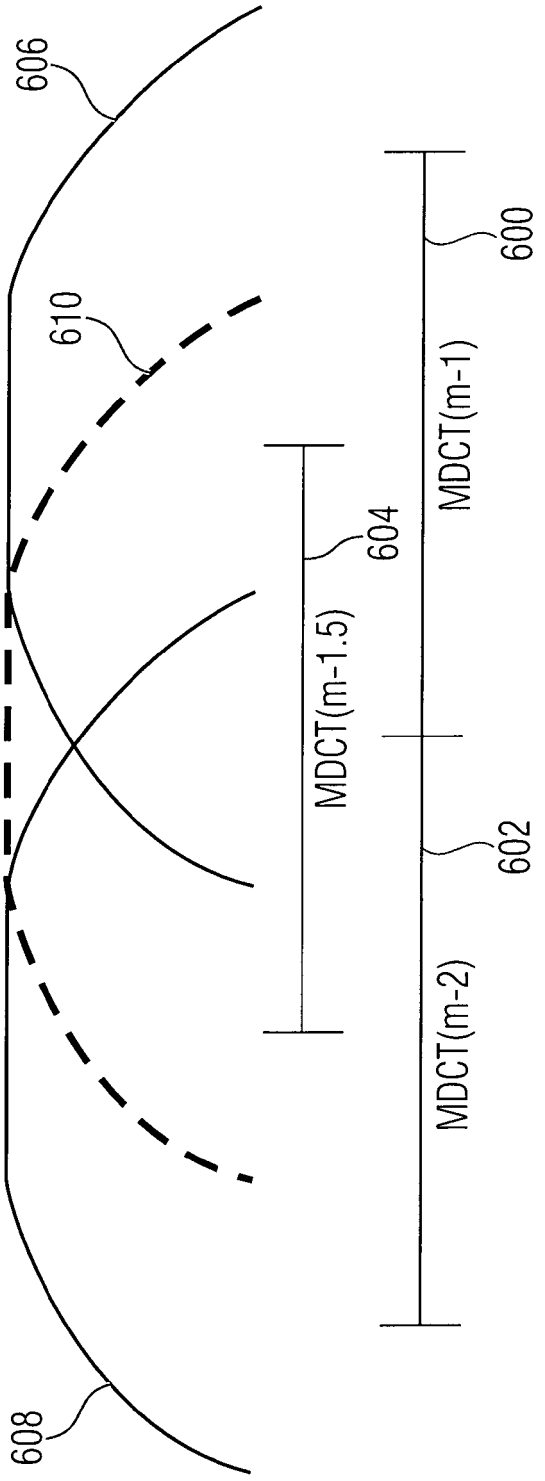

FIG 6

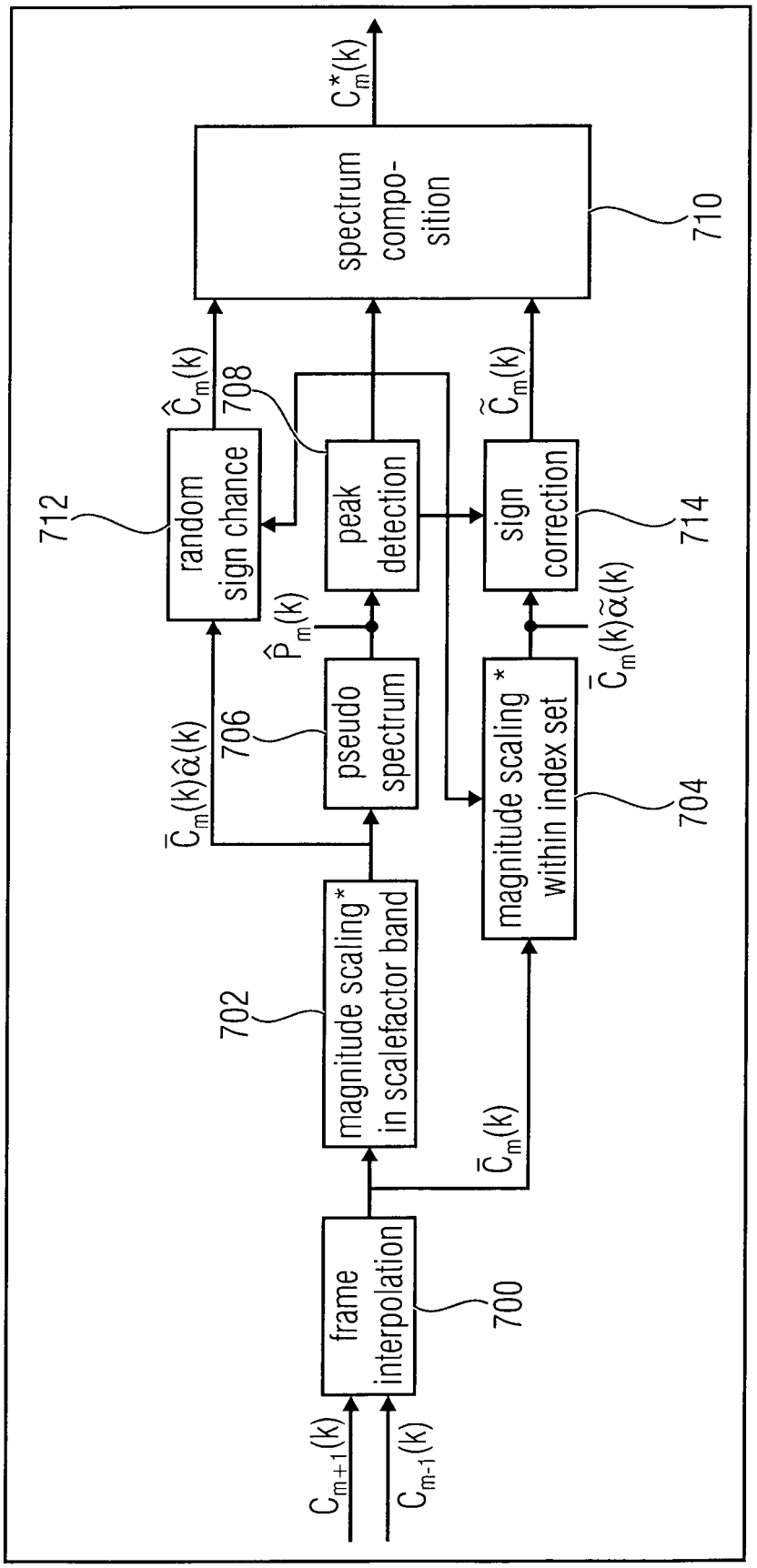
$C_{m+1}(k)$
$C_{m-1}(k)$
frame interpolation
700
magnitude scaling* in scalefactor band
702
$\bar{C}_m(k)$
pseudo spectrum
706
$\hat{P}_m(k)$
peak detection
$\bar{C}_m(k)\hat{\alpha}(k)$
random sign chance
712
$\hat{C}_m(k)$
708
magnitude scaling * within index set
704
$\bar{C}_m(k)\tilde{\alpha}(k)$
sign correction
714
$\tilde{C}_m(k)$
spectrum compo-sition
710
$C^*_m(k)$

FIG 7

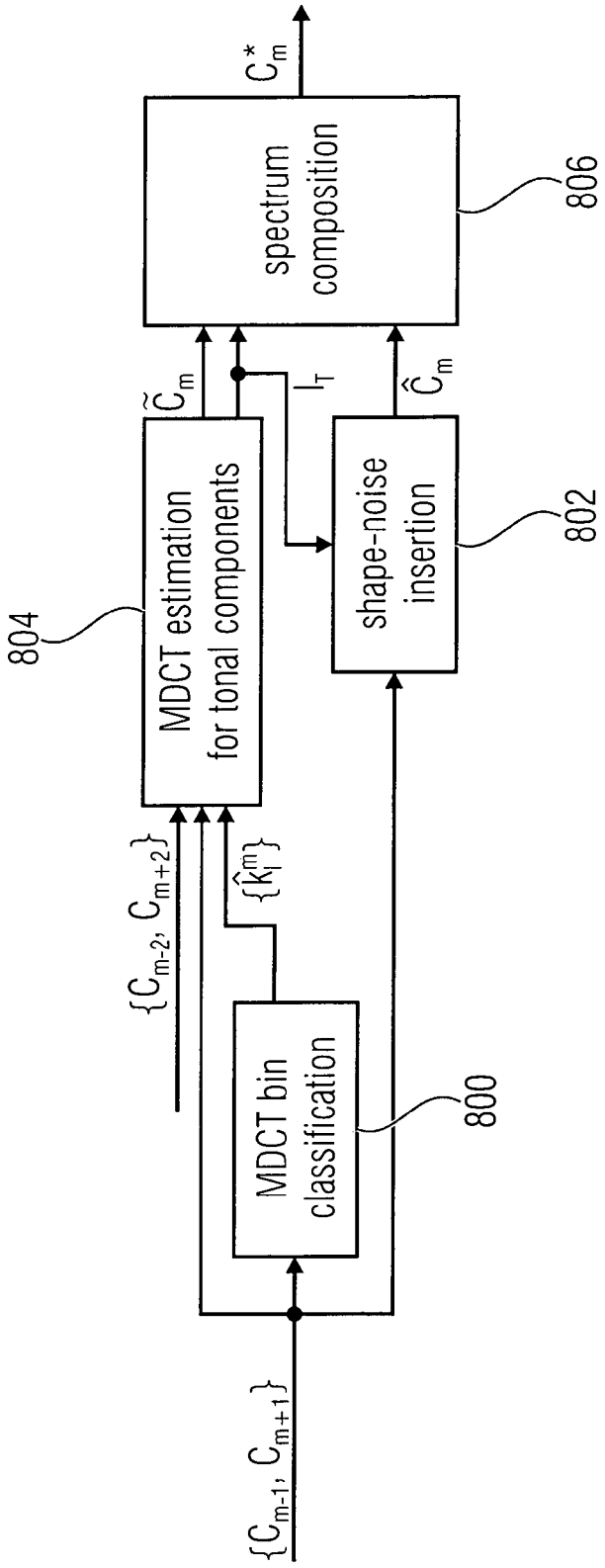
C_m^*
spectrum composition
806
$\tilde{C}_m$
I_T
$\hat{C}_m$
MDCT estimation for tonal components
804
shape-noise insertion
802
$\{C_{m-2}, C_{m+2}\}$
$\{\hat{k}_l^m\}$
MDCT bin classification
800
$\{C_{m-1}, C_{m+1}\}$

FIG 8