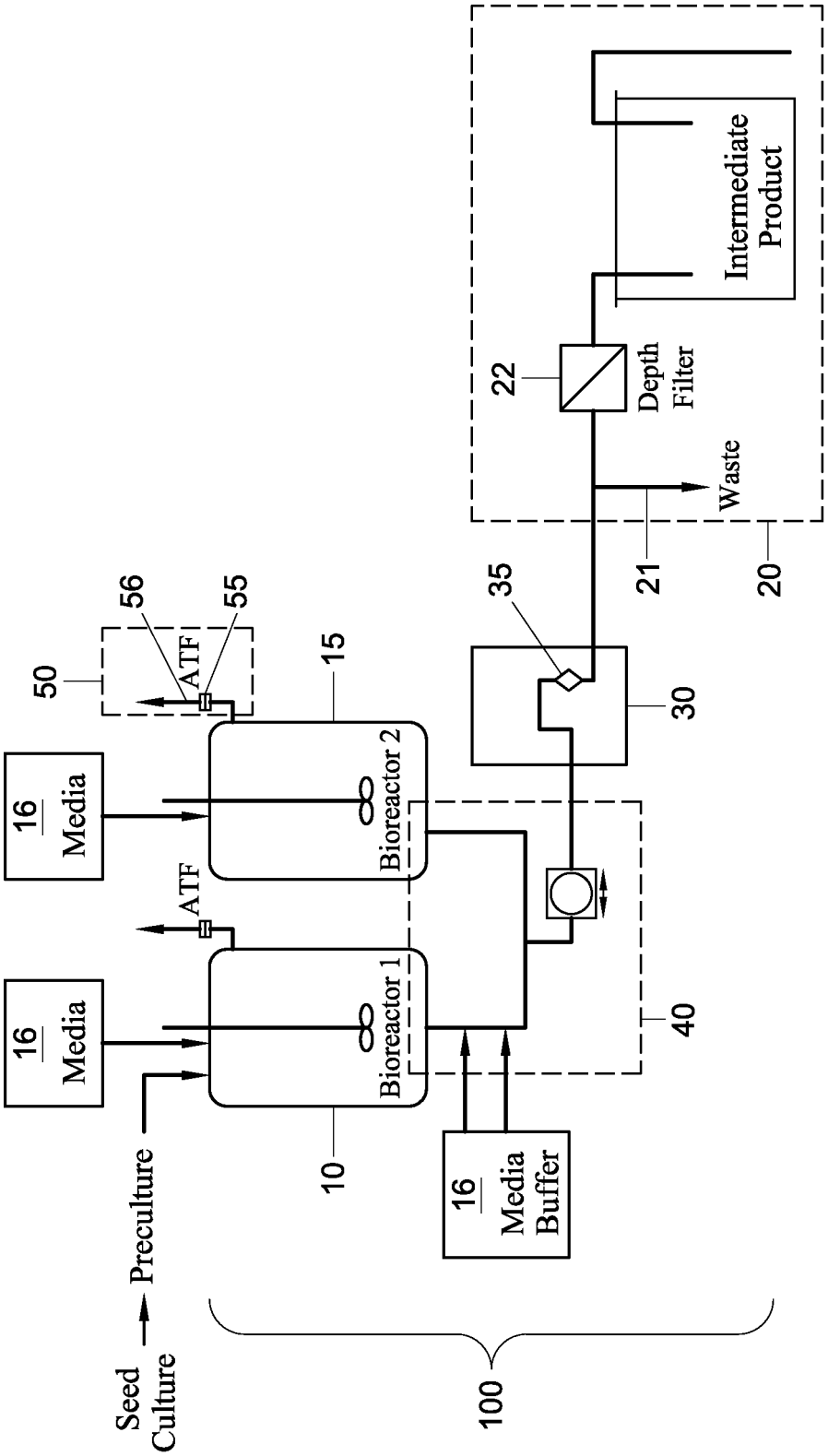
Intermediate Product
22
Depth Filter
Waste
35
21
20
56
55
ATF
50
15
30
16 Media
Bioreactor 2
ATF
16 Media
Bioreactor 1
40
10
16 Media Buffer
Preculture
Seed Culture
100

Fig. 1

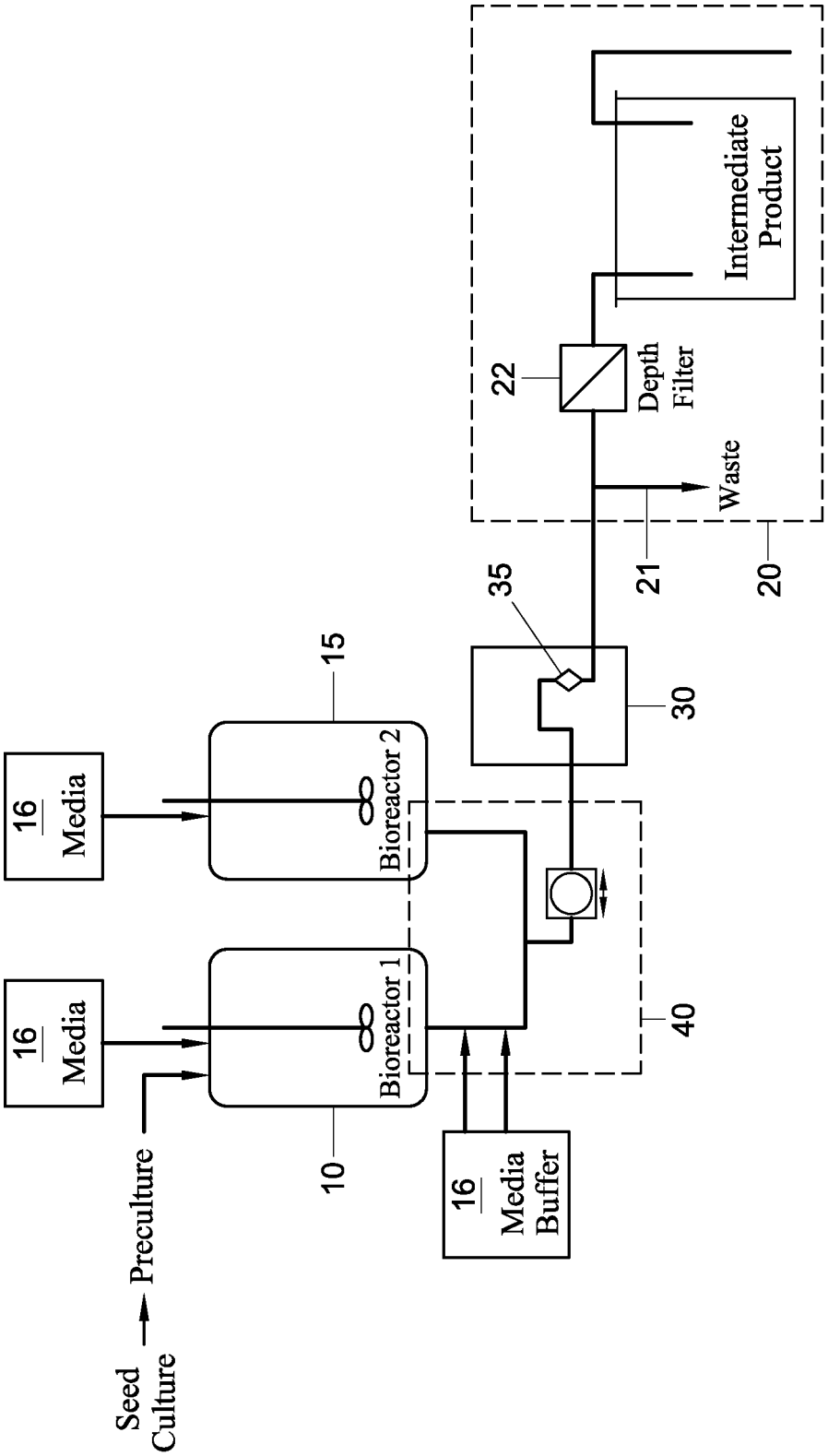
Seed Culture
Preculture
16 Media
16 Media
16 Media Buffer
Bioreactor 1
Bioreactor 2
10
15
40
30
35
22
Depth Filter
Waste
Intermediate Product
21
20

Fig. 2

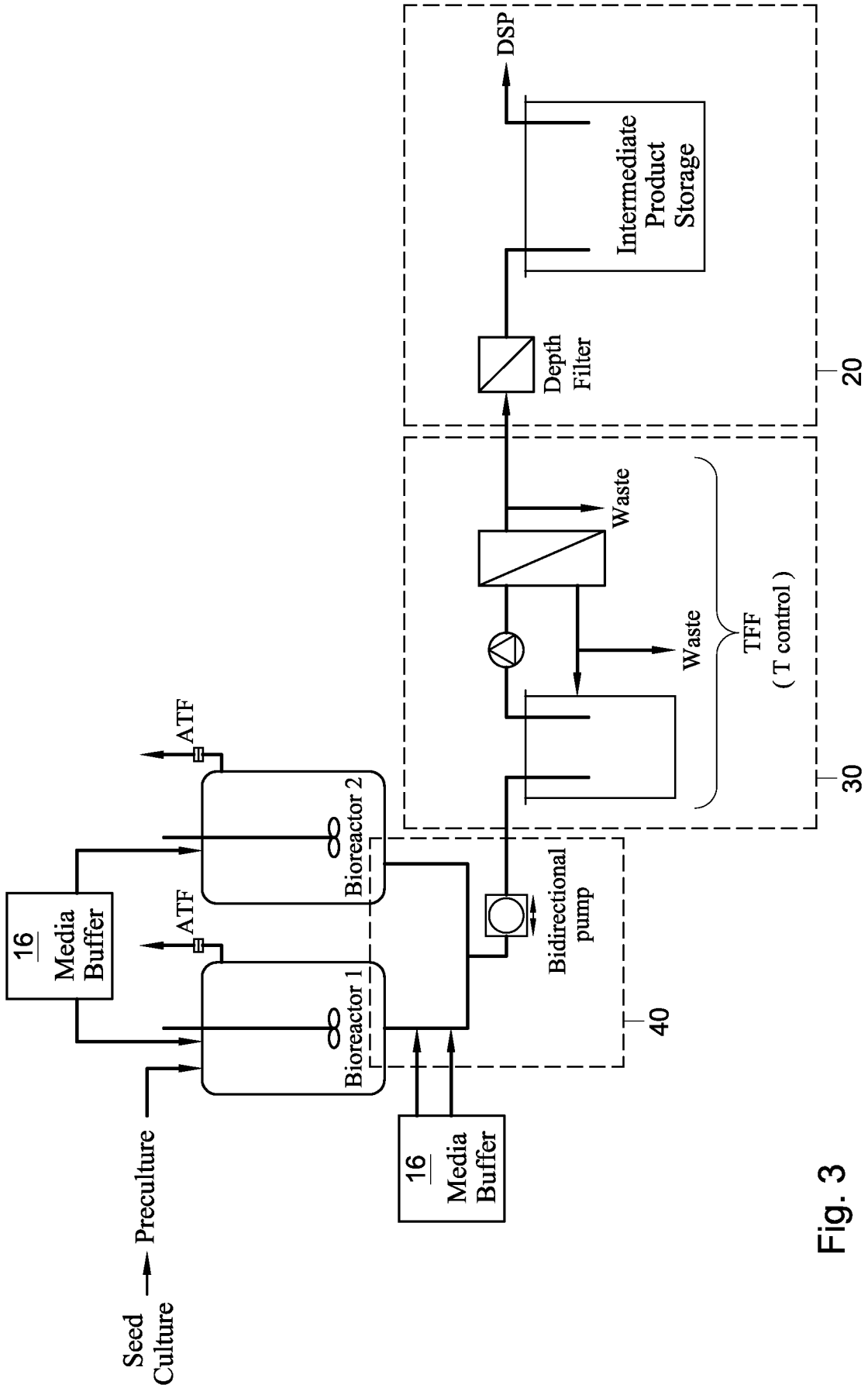
Seed Culture
Preculture
16 Media Buffer
ATF
ATF
Bioreactor 1
Bioreactor 2
Bidirectional pump
40
16 Media Buffer
Waste
Waste
TFF (T control)
30
DSP
Intermediate Product Storage
Depth Filter
20

Fig. 3