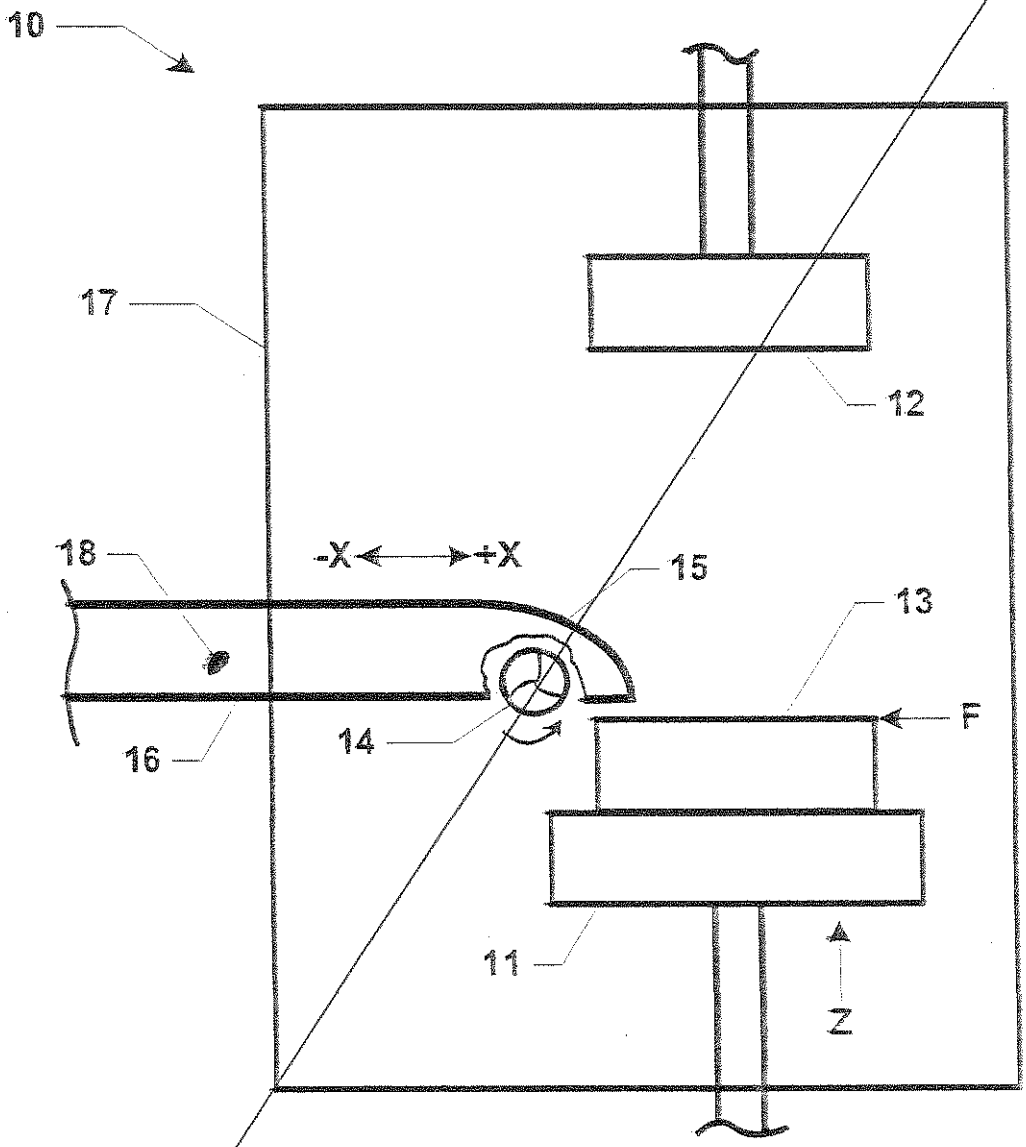

Figure 1

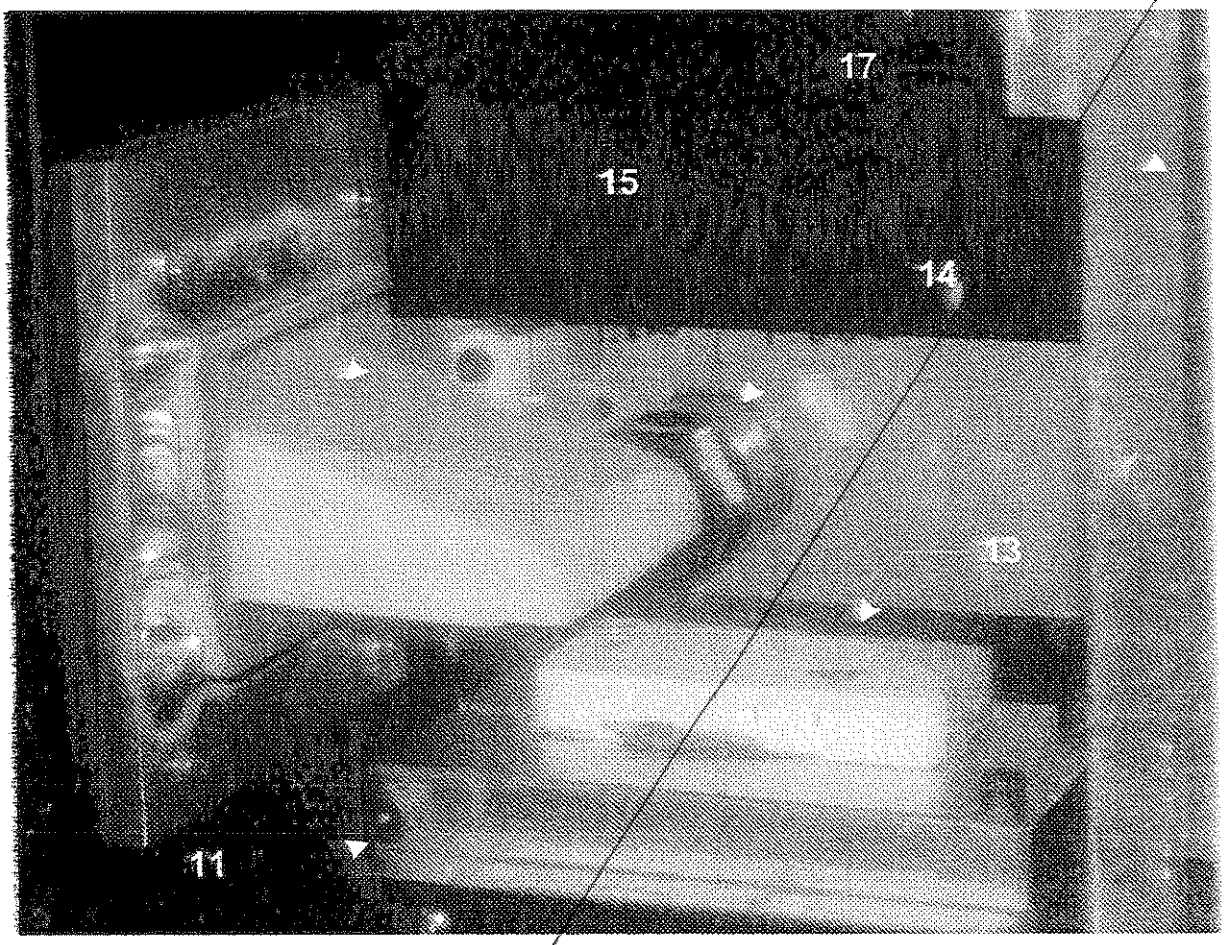

Figure 2

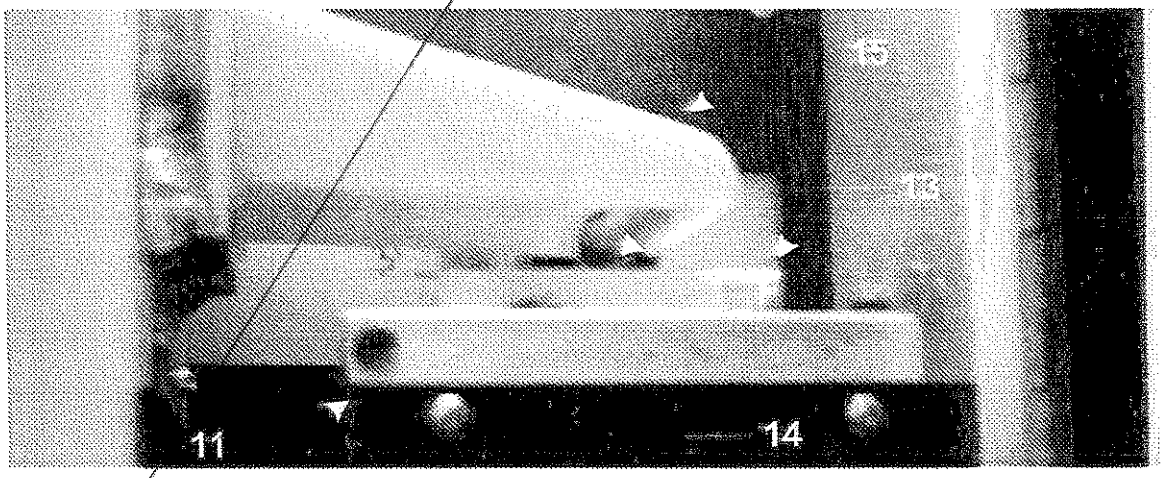

Figure 3

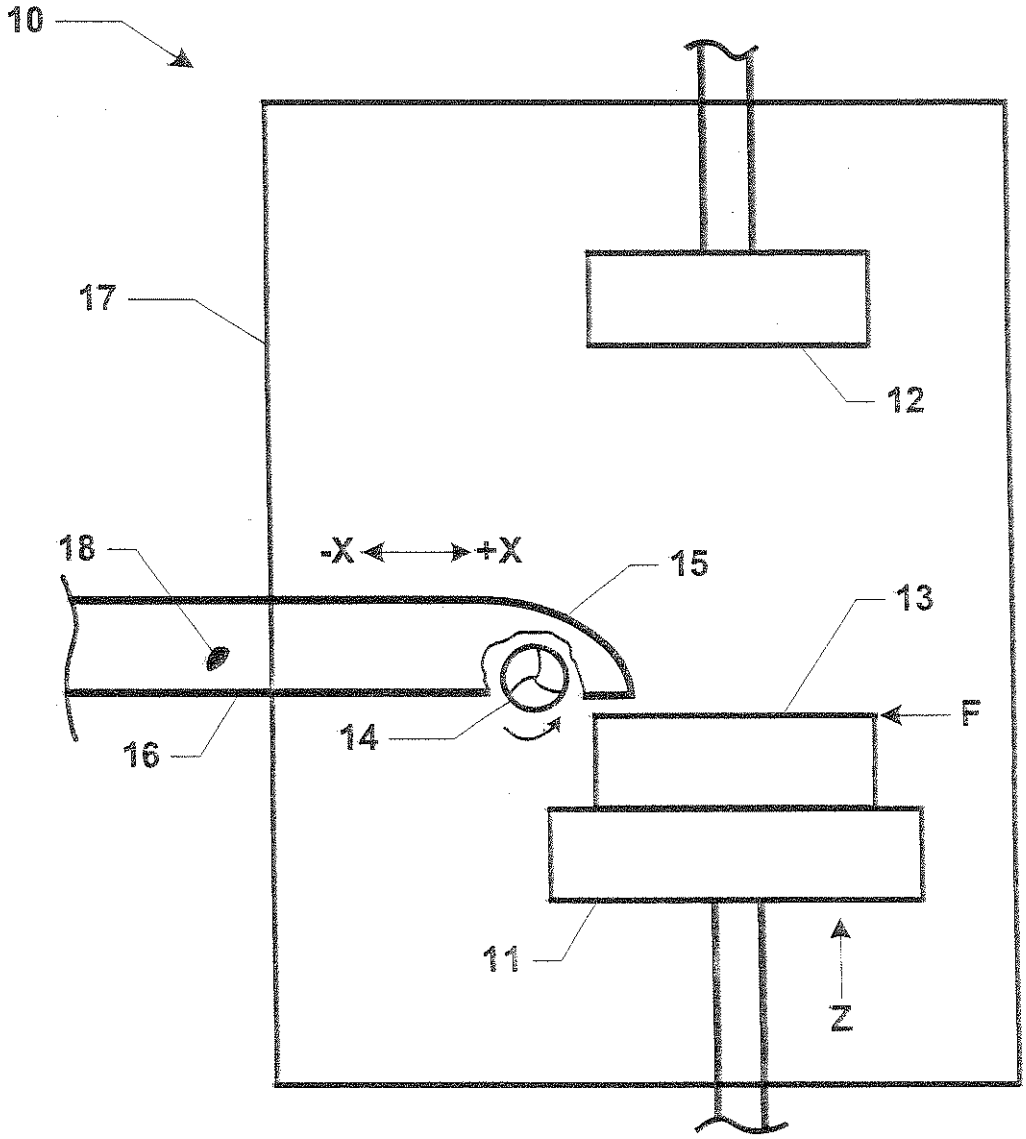

Figure 1

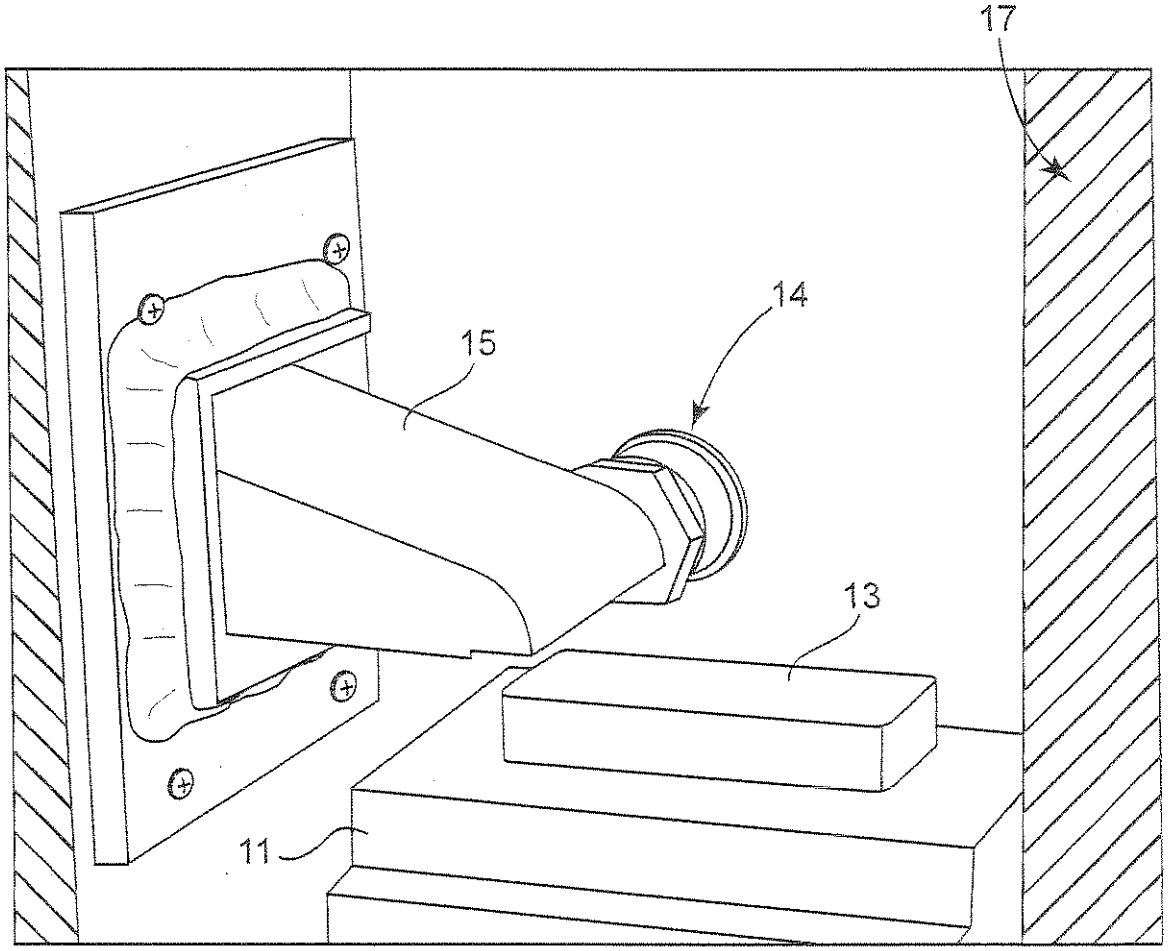

Fig. 2

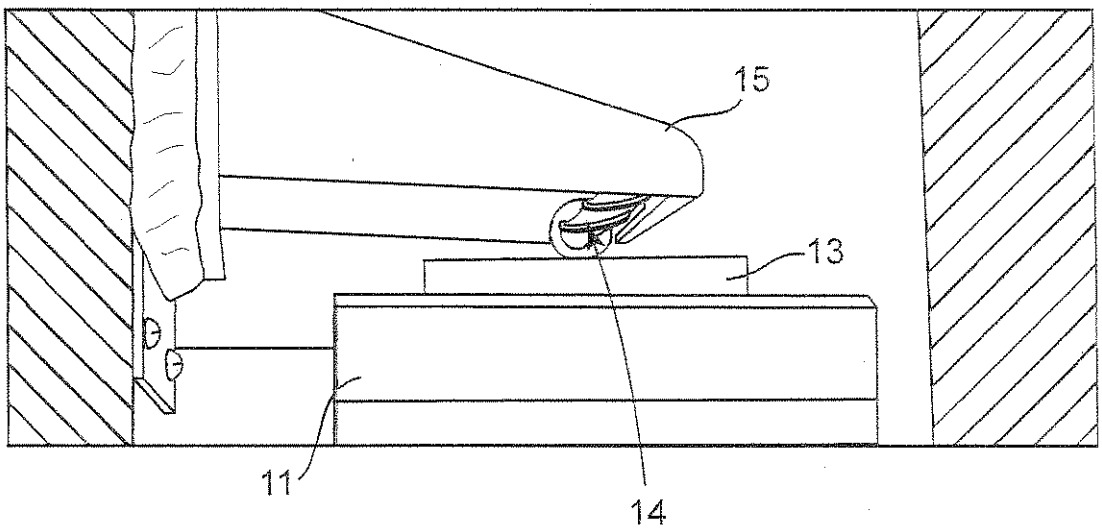

Fig. 3