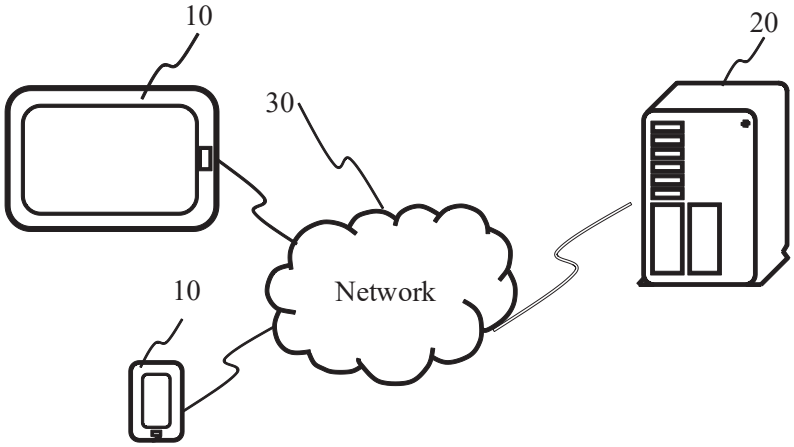
10
20
30
Network
10

FIG. 1

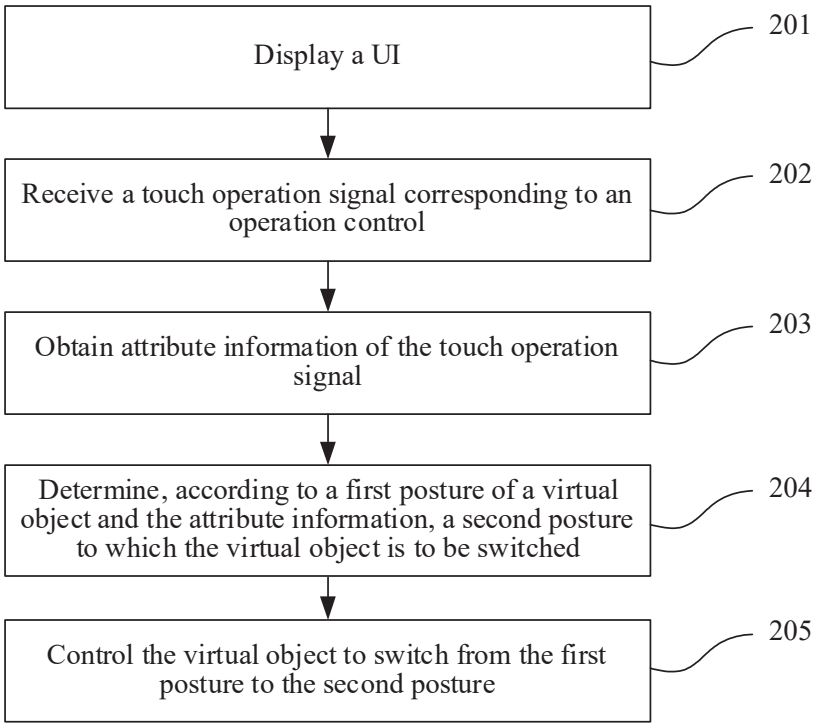
Display a UI
201
Receive a touch operation signal corresponding to an operation control
202
Obtain attribute information of the touch operation signal
203
Determine, according to a first posture of a virtual object and the attribute information, a second posture to which the virtual object is to be switched
204
Control the virtual object to switch from the first posture to the second posture
205

FIG. 2

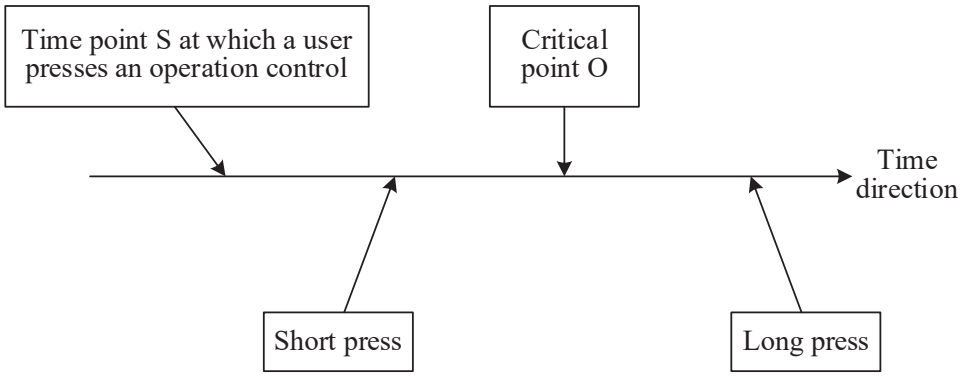
Time point S at which a user presses an operation control
Critical point O
Time direction
Short press
Long press

FIG. 3

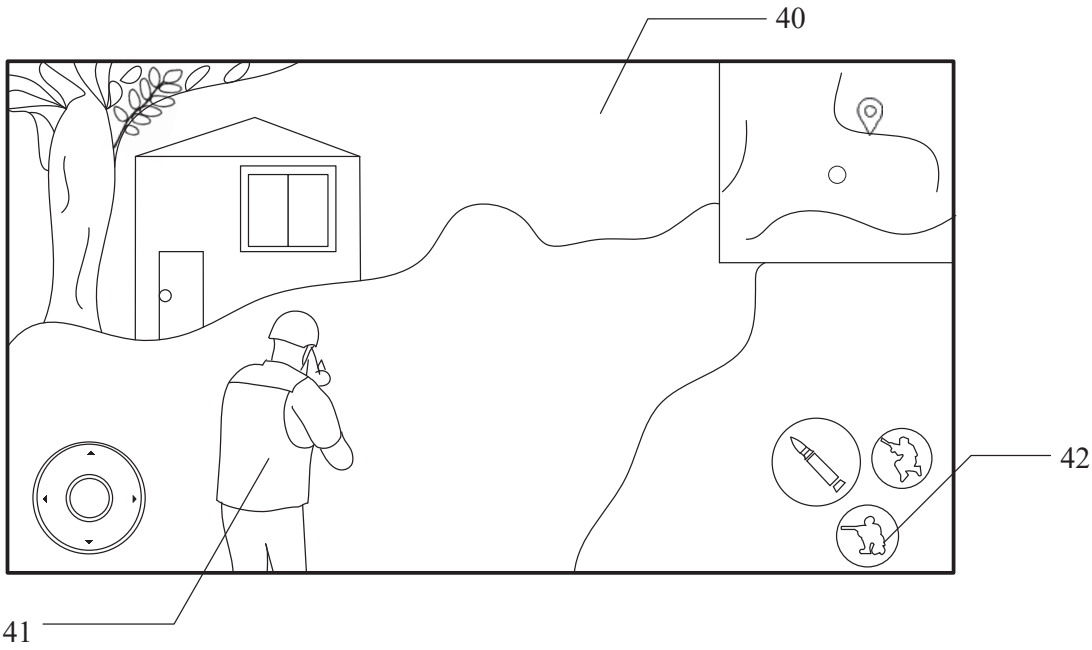
40
42
41

FIG. 4

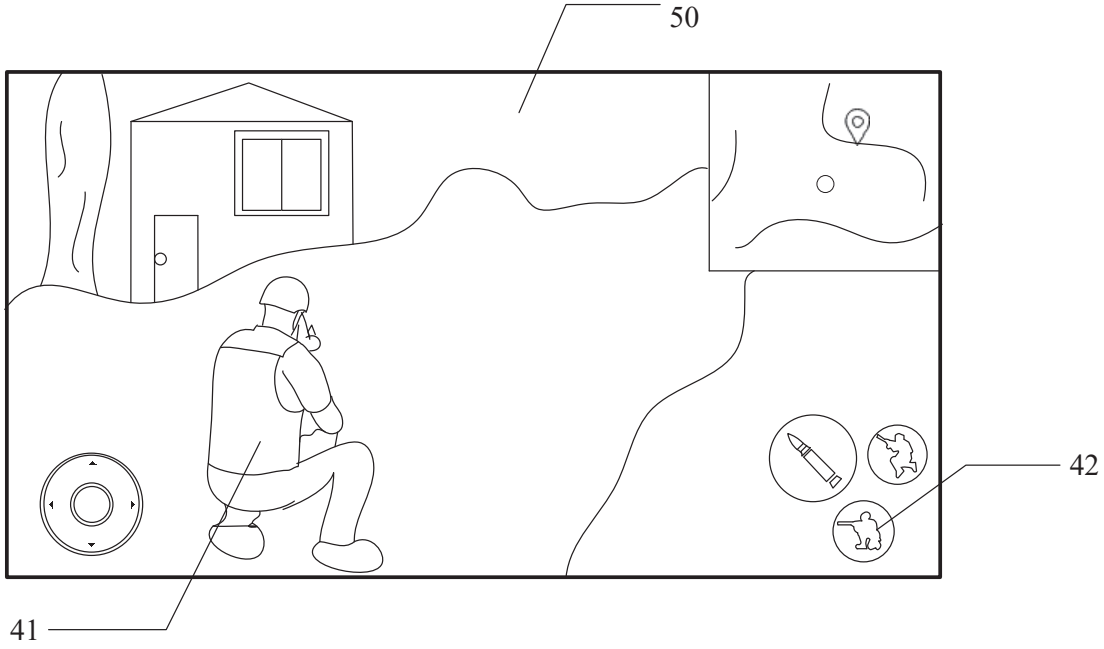

FIG. 5

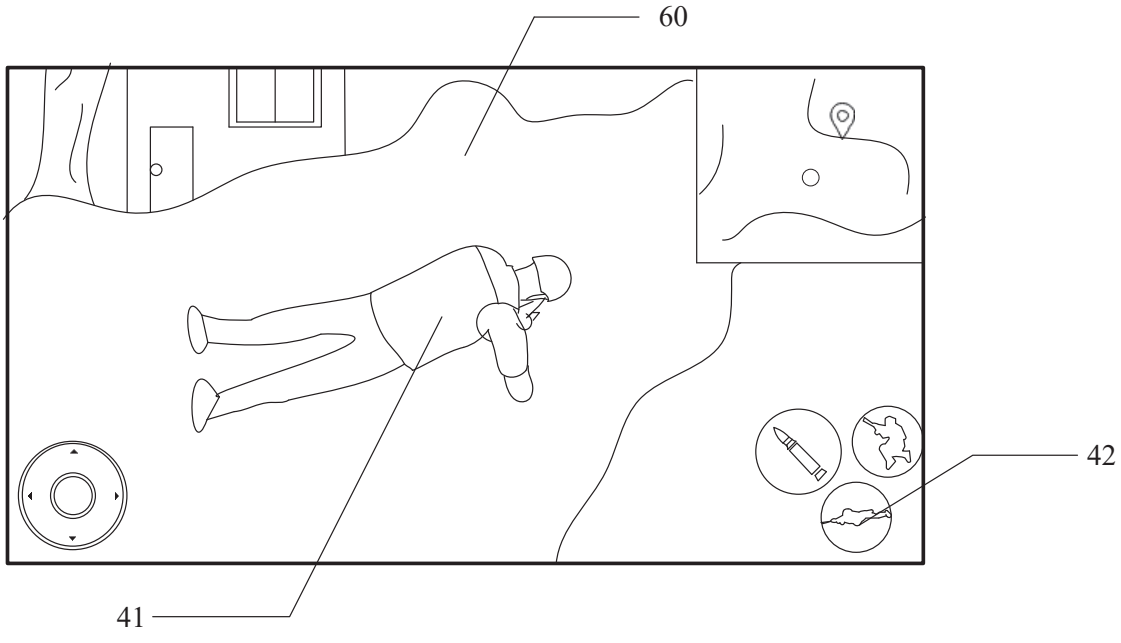

FIG. 6

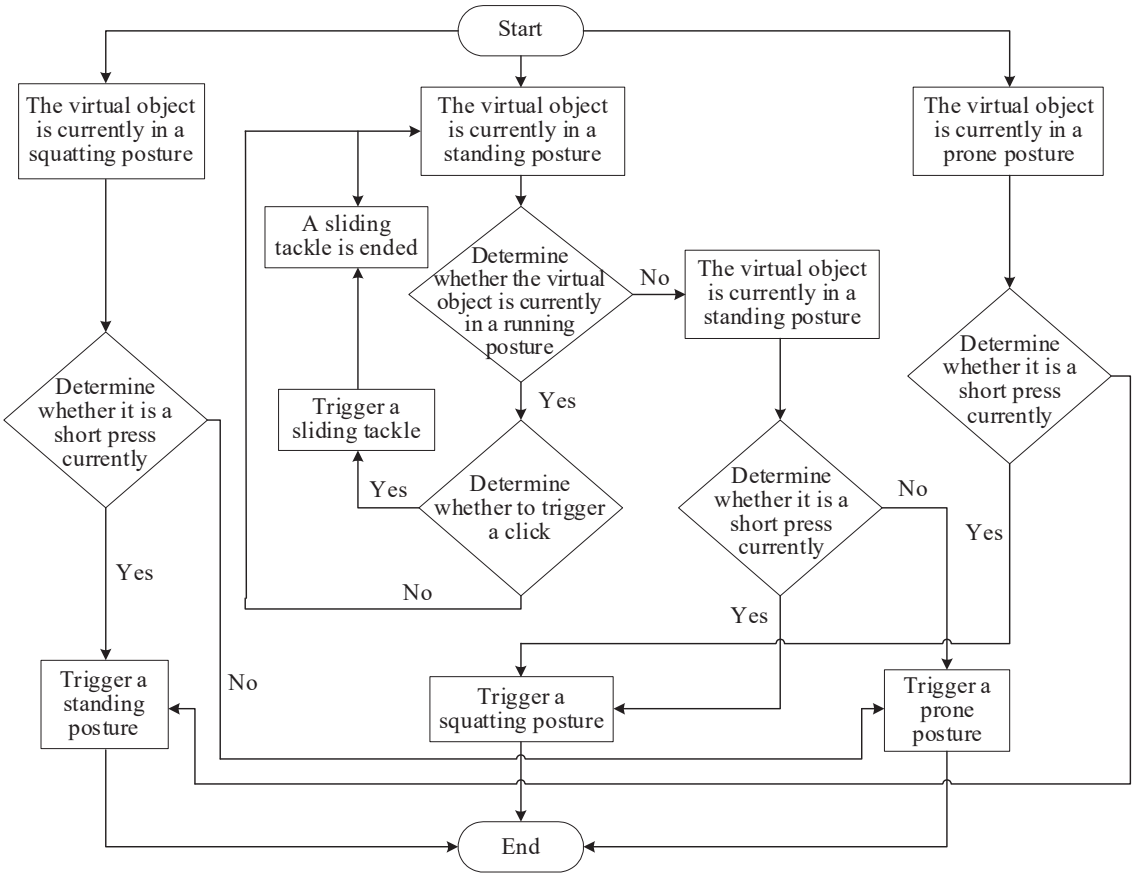
Start
The virtual object is currently in a squatting posture
The virtual object is currently in a standing posture
The virtual object is currently in a prone posture
A sliding tackle is ended
Determine whether the virtual object is currently in a running posture
No
The virtual object is currently in a standing posture
Determine whether it is a short press currently
Trigger a sliding tackle
Yes
Determine whether to trigger a click
Yes
Determine whether it is a short press currently
No
Determine whether it is a short press currently
Yes
No
Yes
Yes
No
Trigger a standing posture
Trigger a squatting posture
Trigger a prone posture
End

FIG. 7

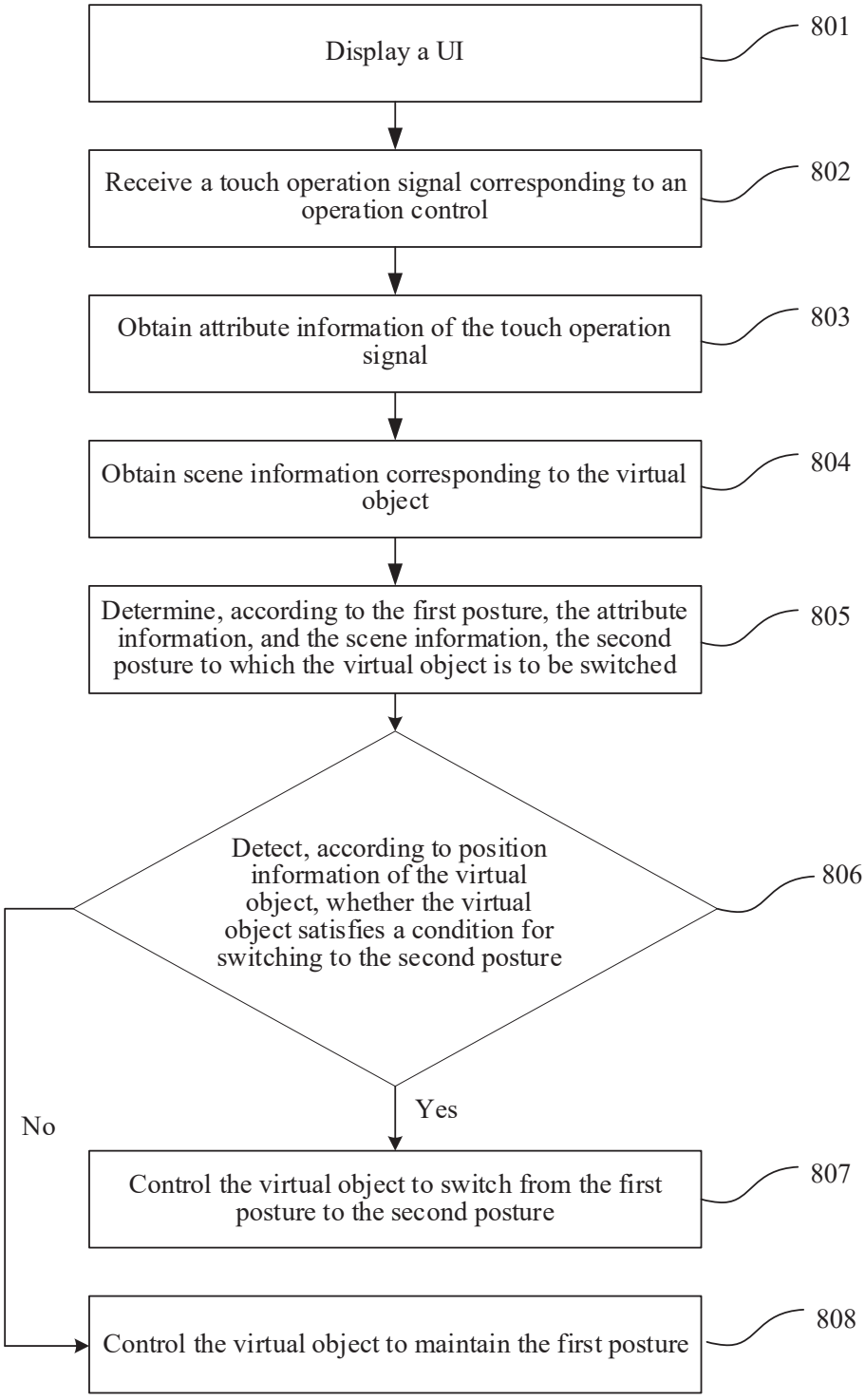
Display a UI
801
Receive a touch operation signal corresponding to an operation control
802
Obtain attribute information of the touch operation signal
803
Obtain scene information corresponding to the virtual object
804
Determine, according to the first posture, the attribute information, and the scene information, the second posture to which the virtual object is to be switched
805
Detect, according to position information of the virtual object, whether the virtual object satisfies a condition for switching to the second posture
806
Yes
No
Control the virtual object to switch from the first posture to the second posture
807
Control the virtual object to maintain the first posture
808

FIG. 8

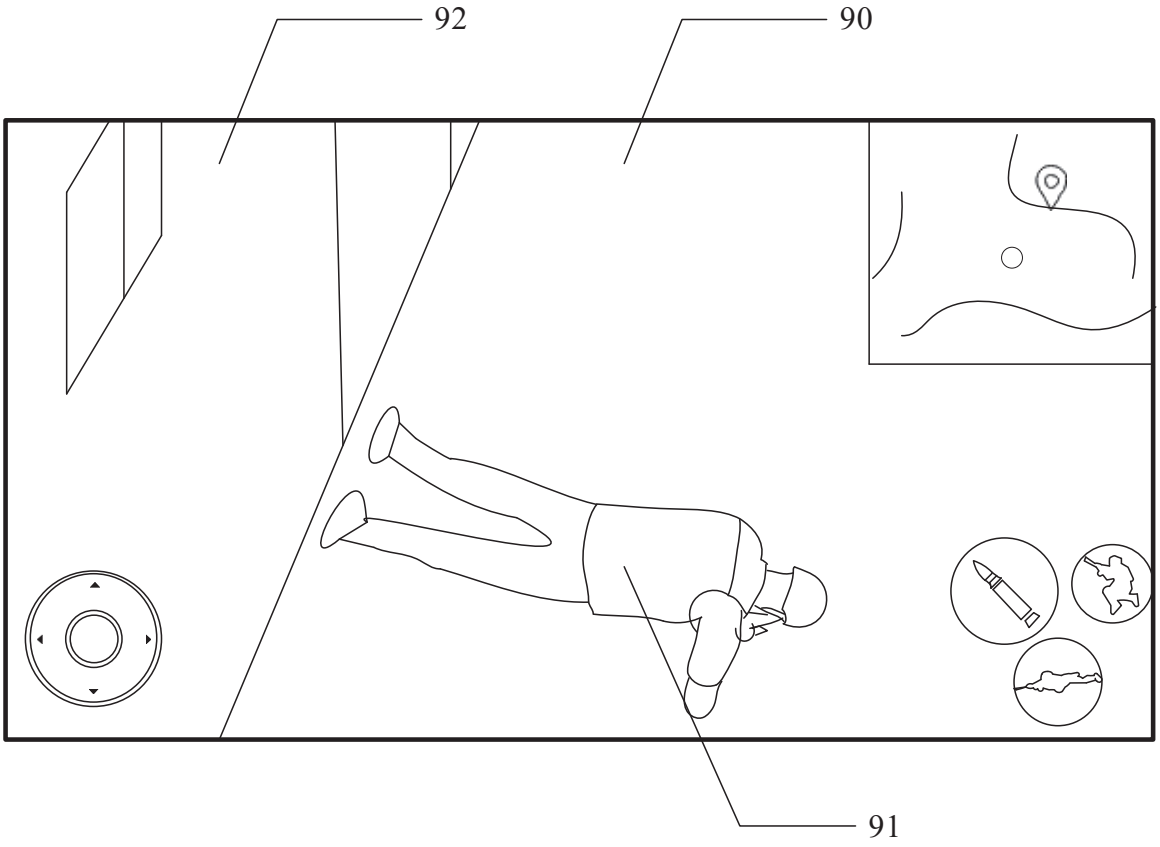

FIG. 9

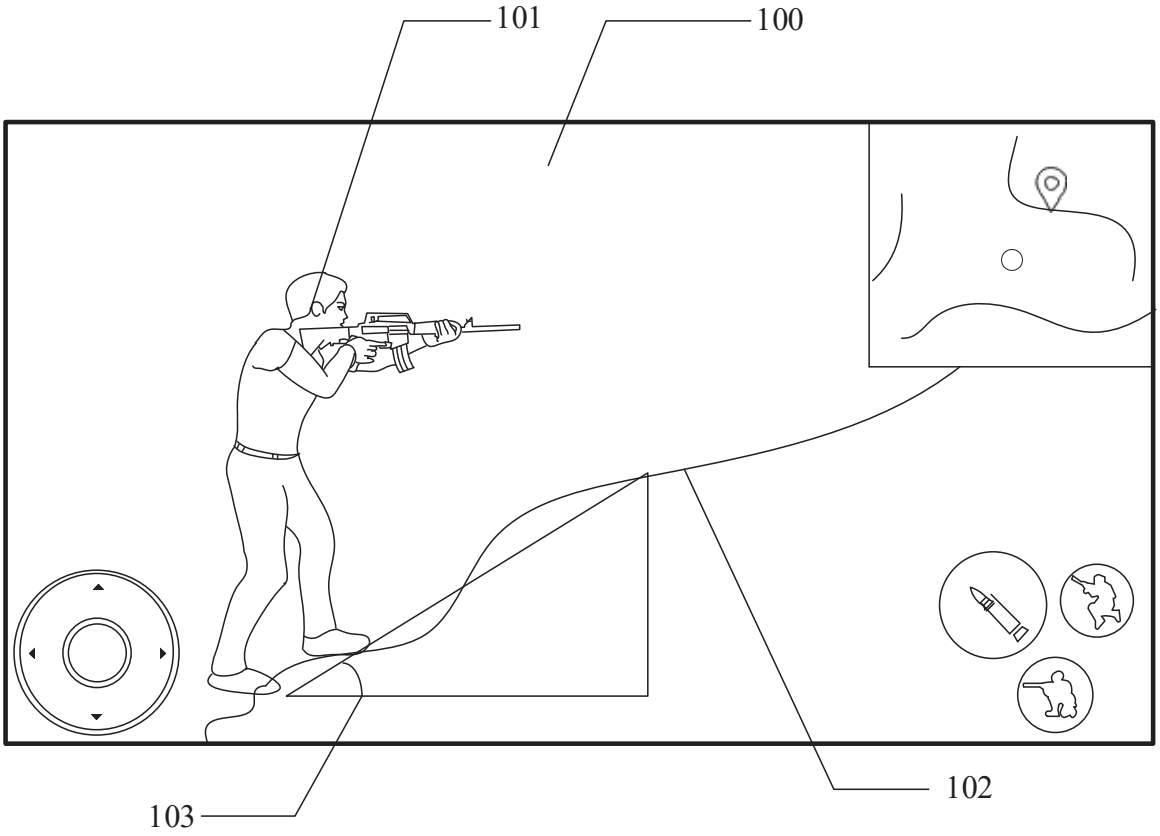
101
100
103
102

FIG. 10

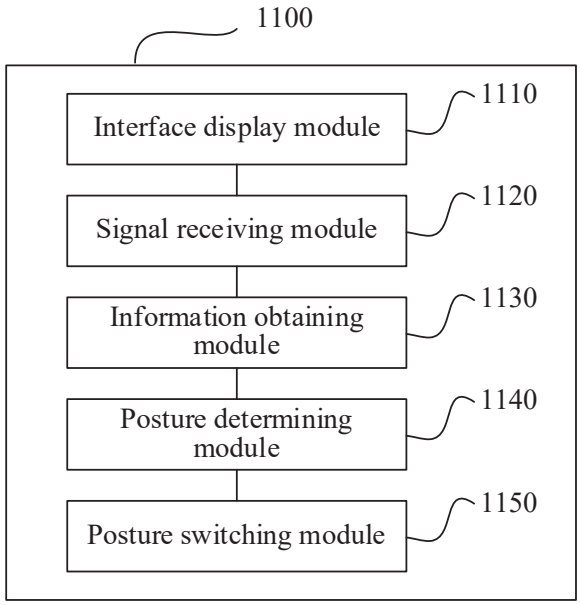
1100
Interface display module
1110
Signal receiving module
1120
Information obtaining module
1130
Posture determining module
1140
Posture switching module
1150

FIG. 11

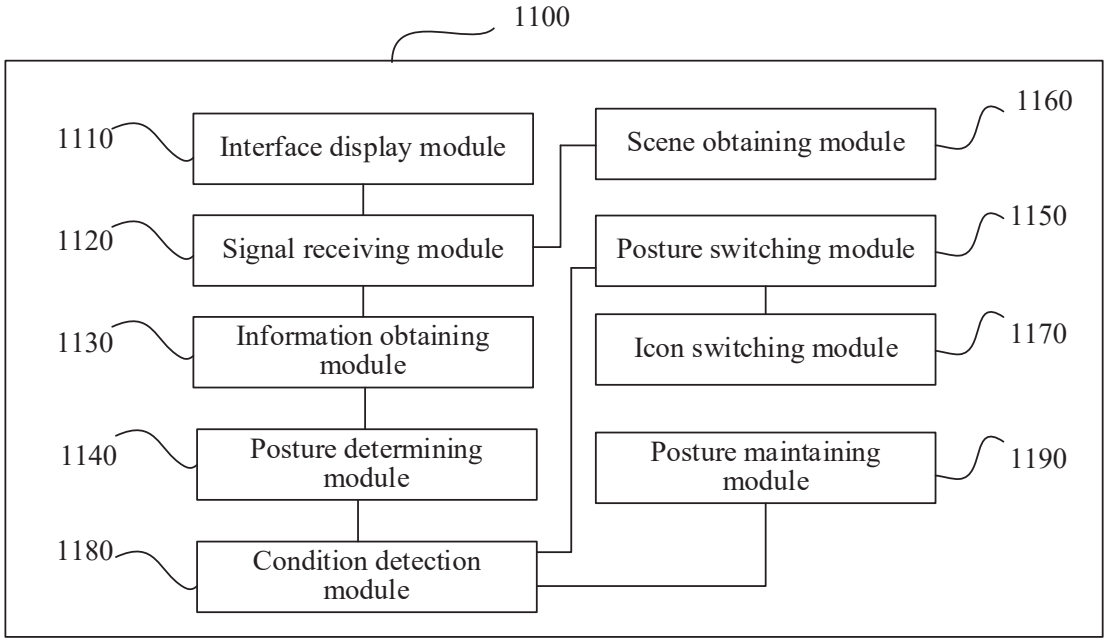
1100
1110
Interface display module
1120
Signal receiving module
1130
Information obtaining module
1140
Posture determining module
1180
Condition detection module
1160
Scene obtaining module
1150
Posture switching module
1170
Icon switching module
1190
Posture maintaining module

FIG. 12

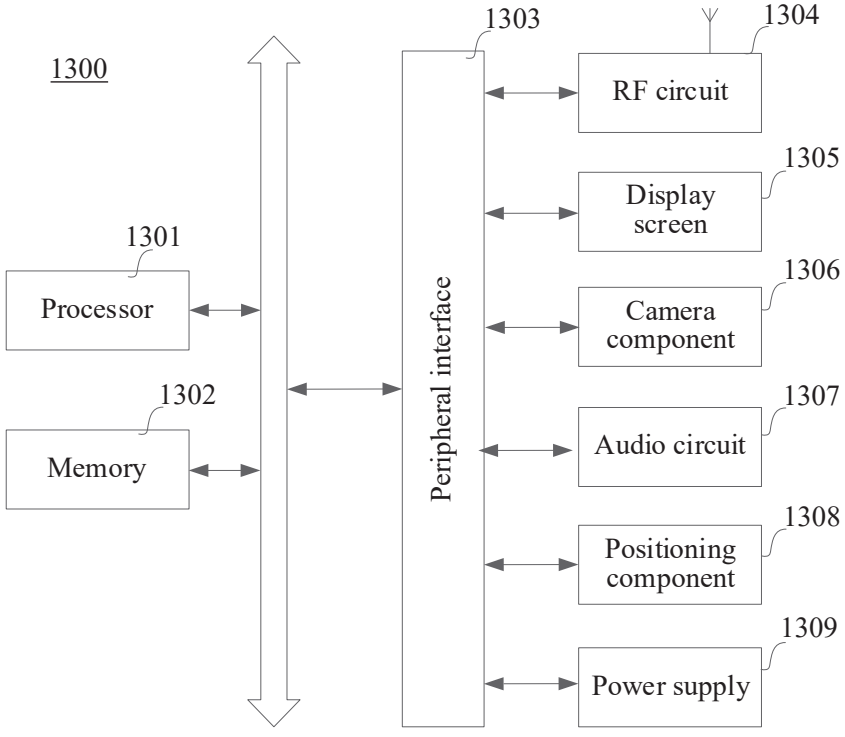
1300
1301
Processor
1302
Memory
1303
Peripheral interface
1304
RF circuit
1305
Display screen
1306
Camera component
1307
Audio circuit
1308
Positioning component
1309
Power supply

FIG. 13