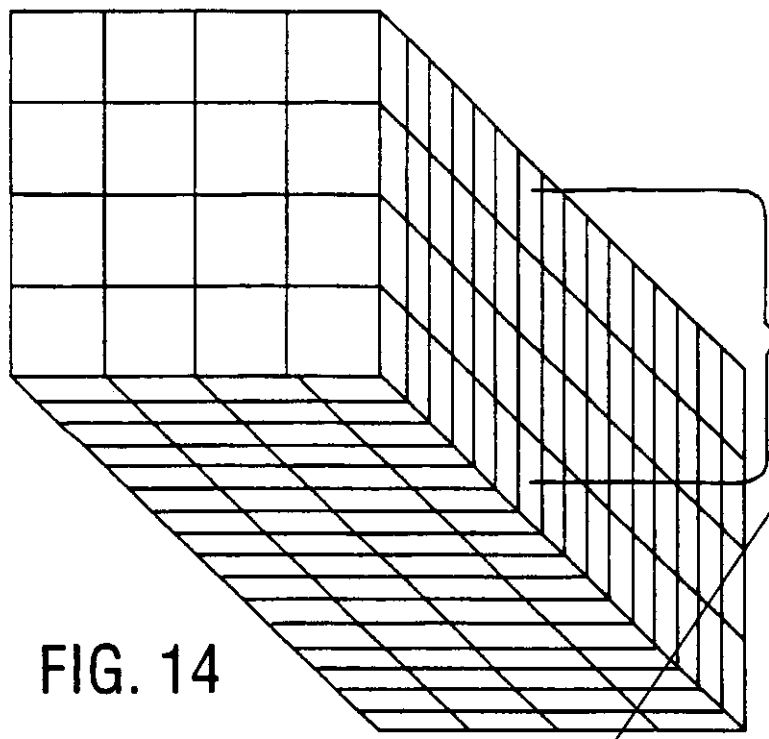

FIG. 14

A HYPER-PYRAMID CUBE LAYER (HYPER-CUBE)

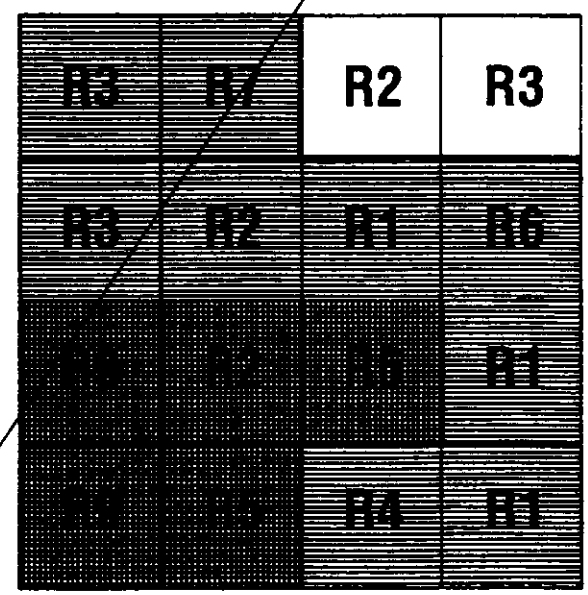

FIG. 15

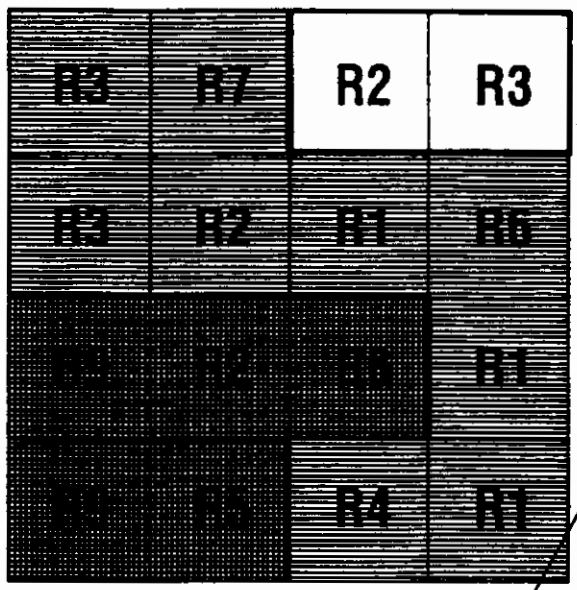

FIG. 16

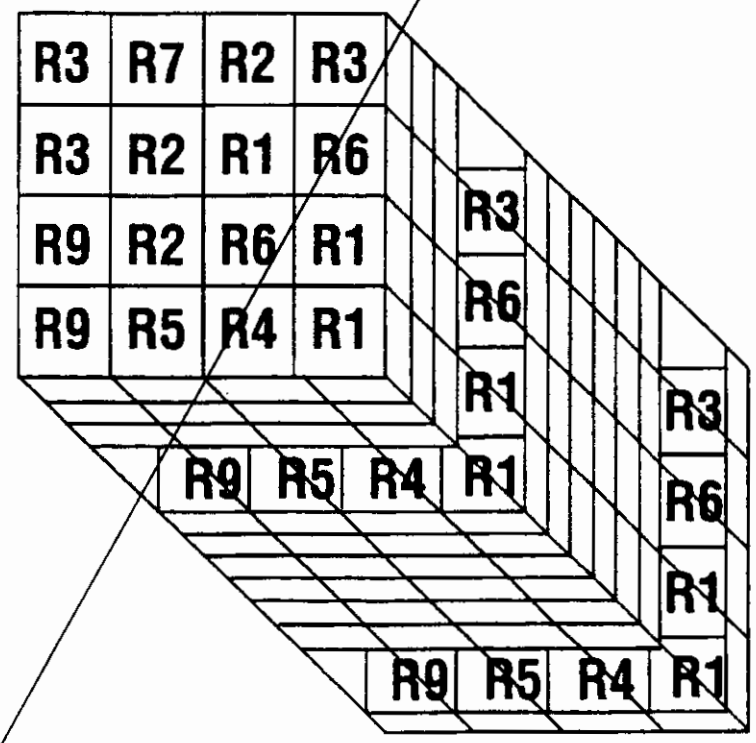

FIG. 17

CELL PROJECTION THROUGH A HYPER-CUBE

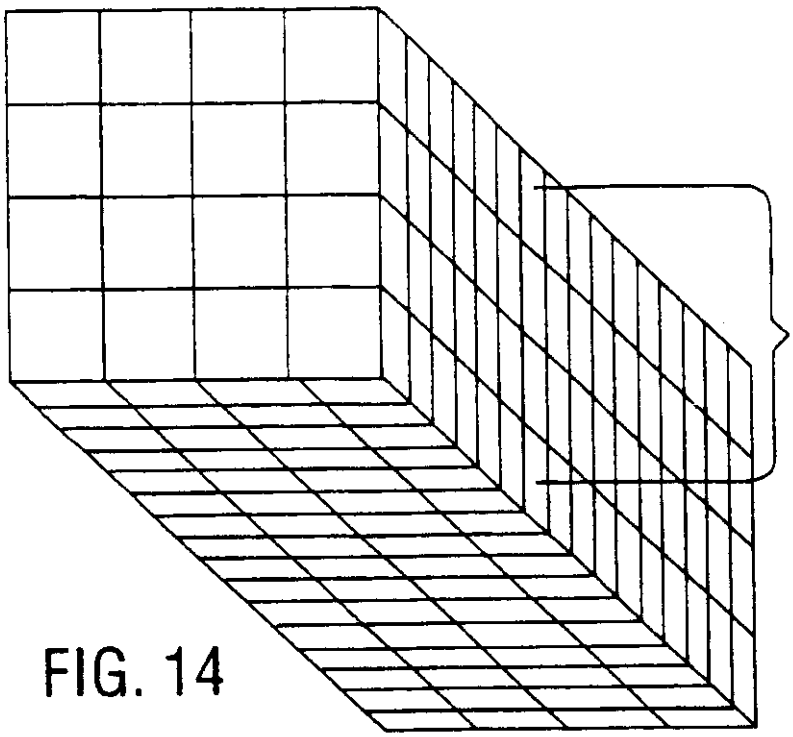

FIG. 14

A HYPER-PYRAMID CUBE LAYER (HYPER-CUBE)

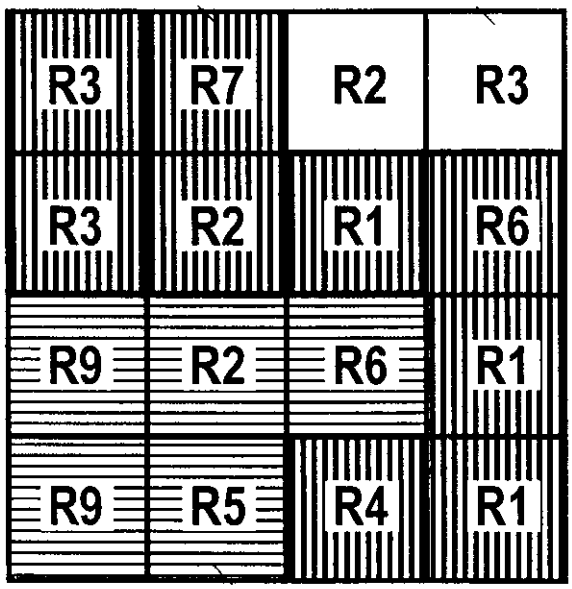

FIG. 15

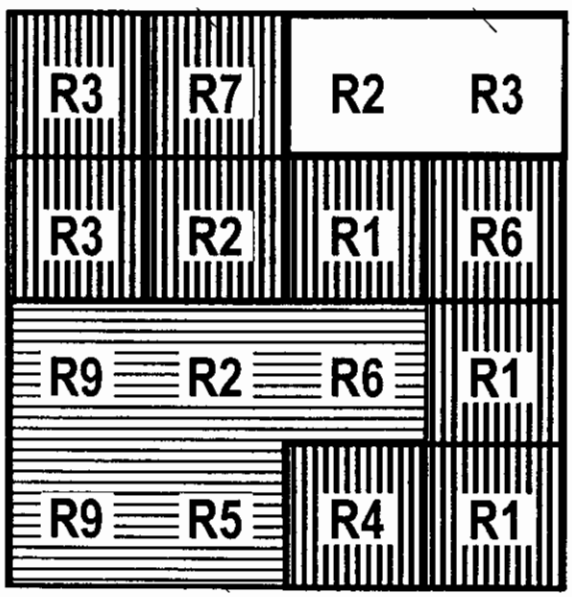

FIG. 16

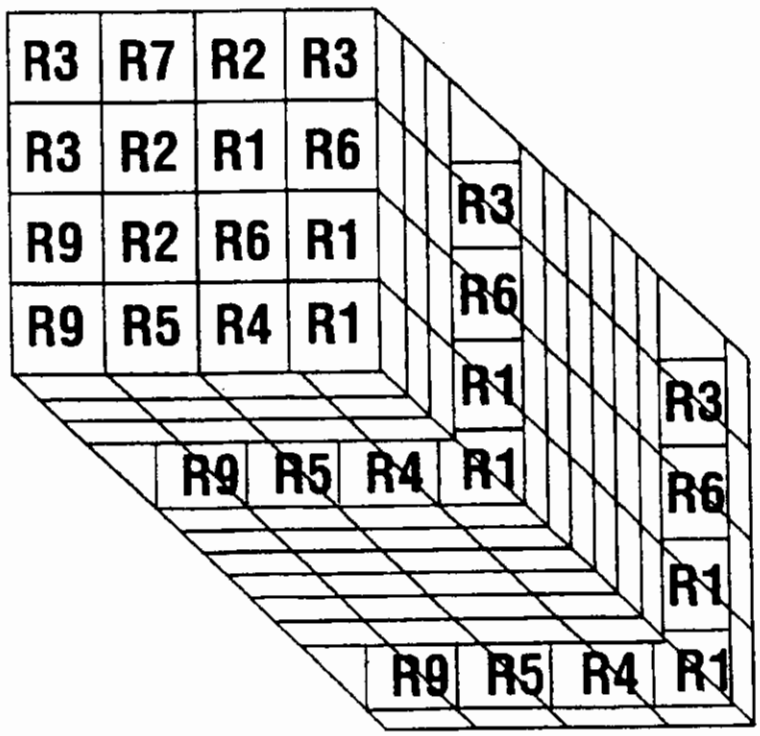

FIG. 17

CELL PROJECTION THROUGH A HYPER-CUBE