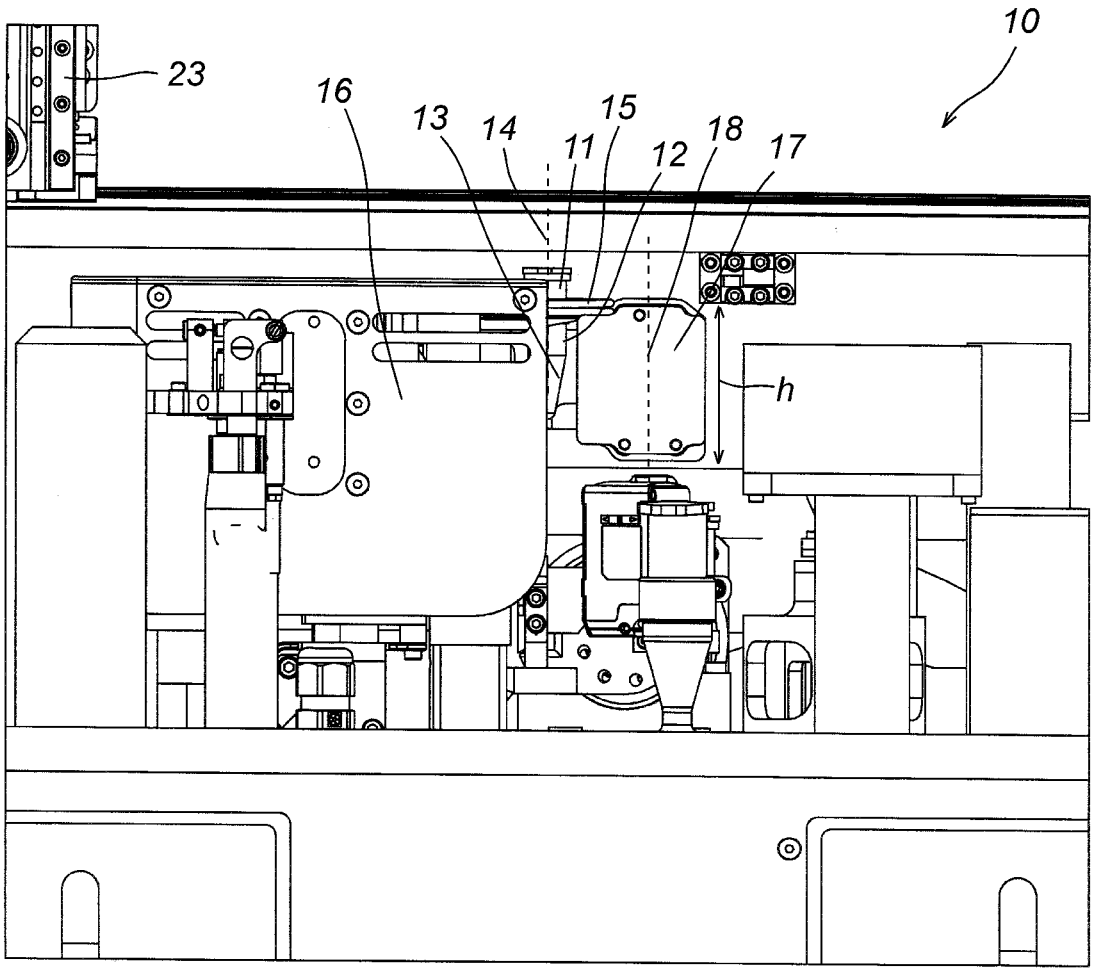

Fig. 1

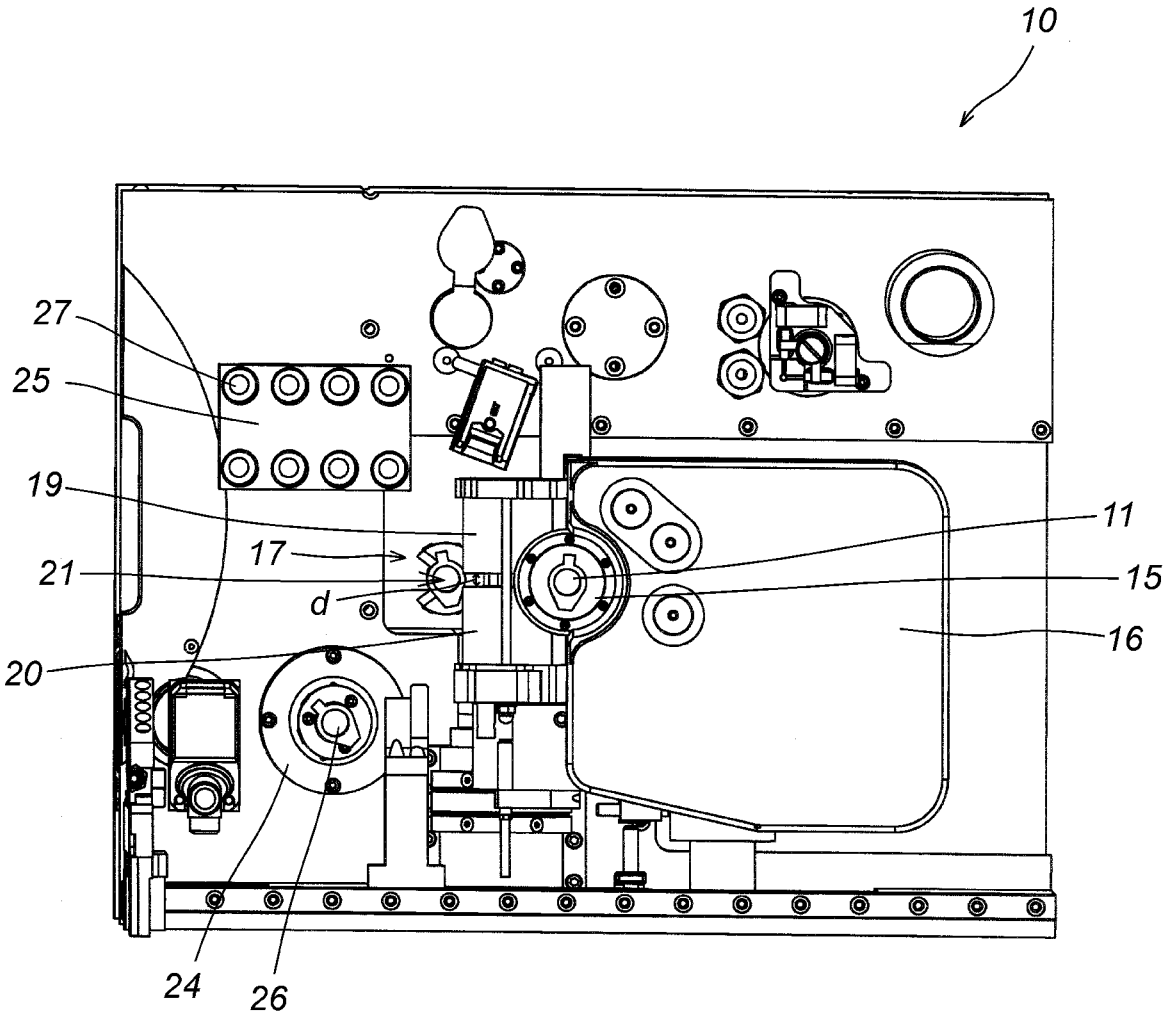

Fig. 2

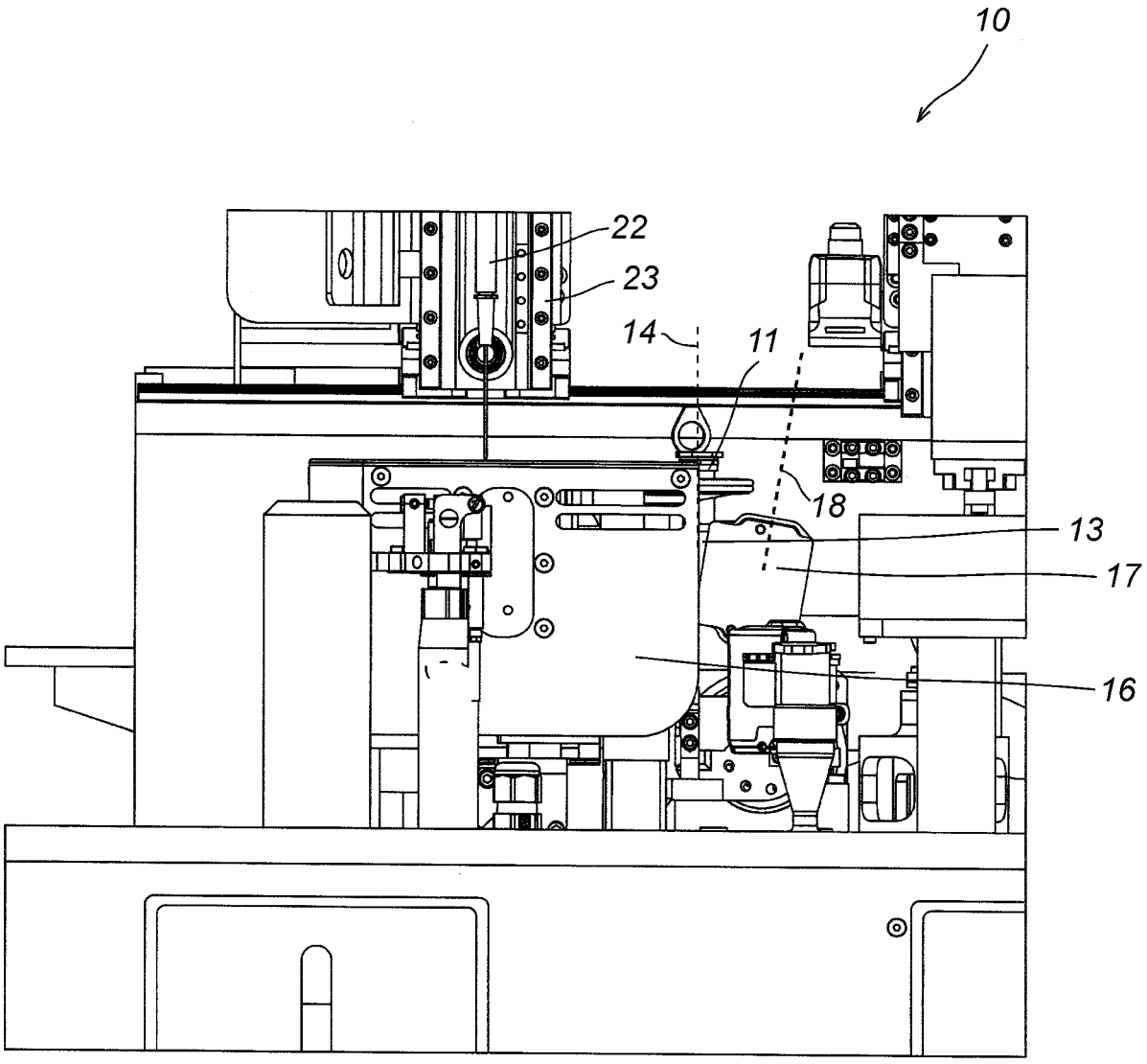

Fig. 3

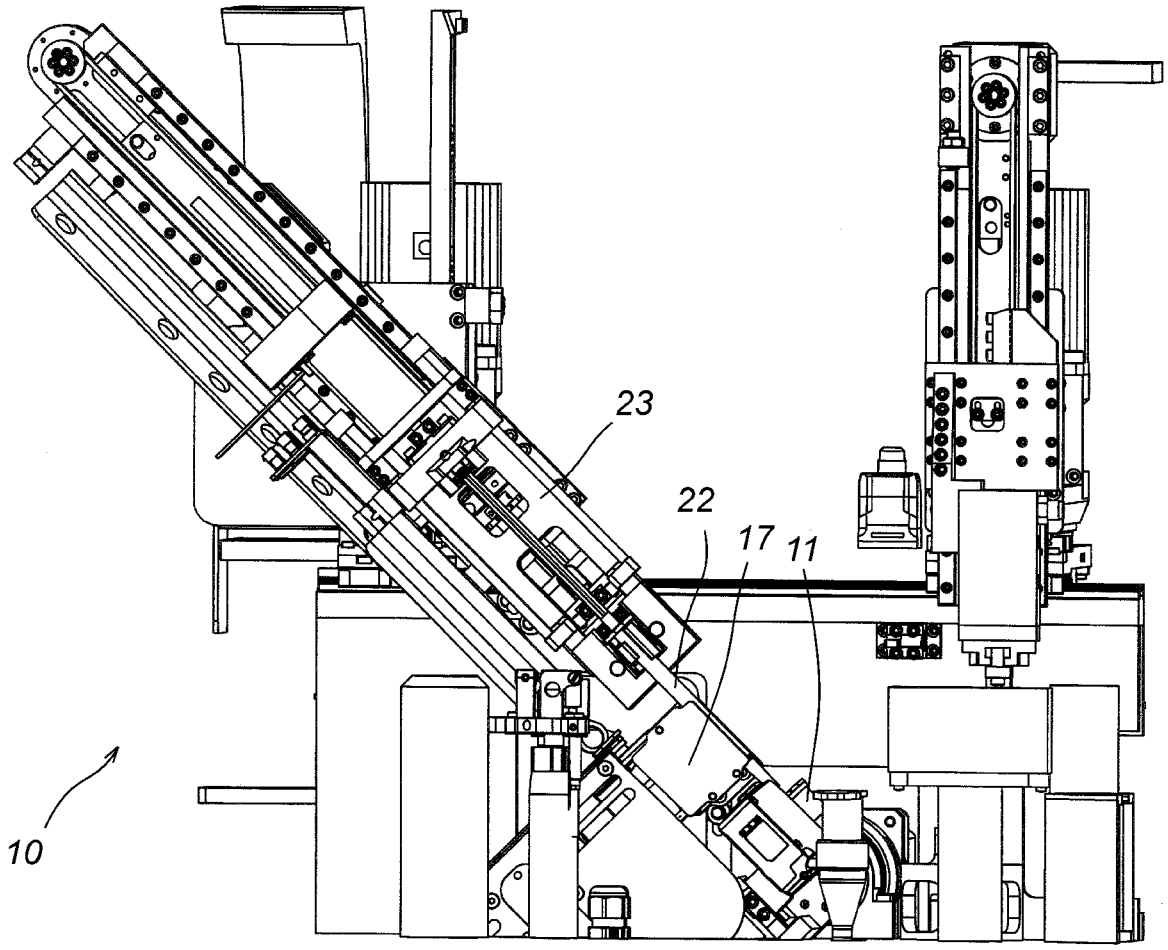

Fig. 4

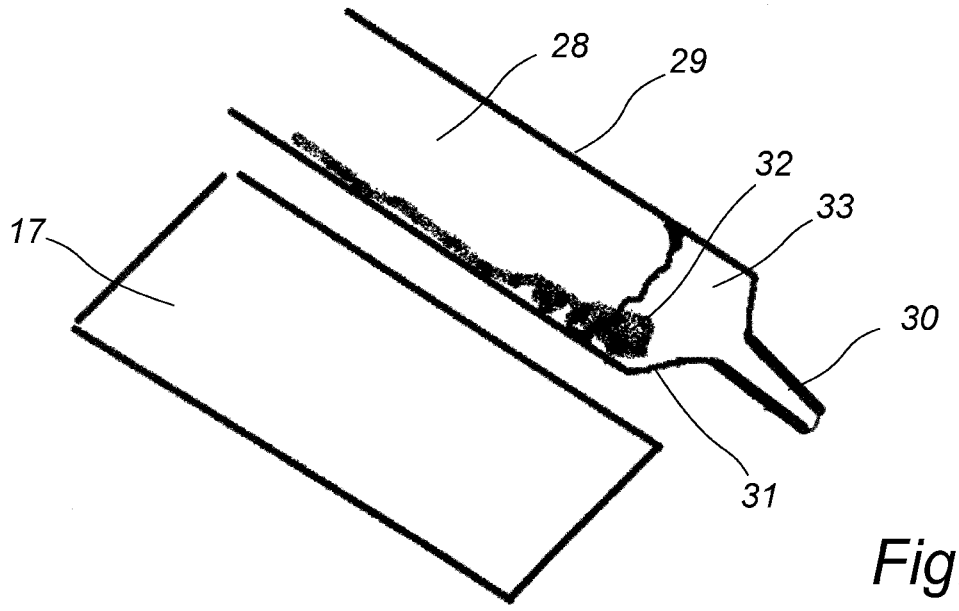

Fig. 5

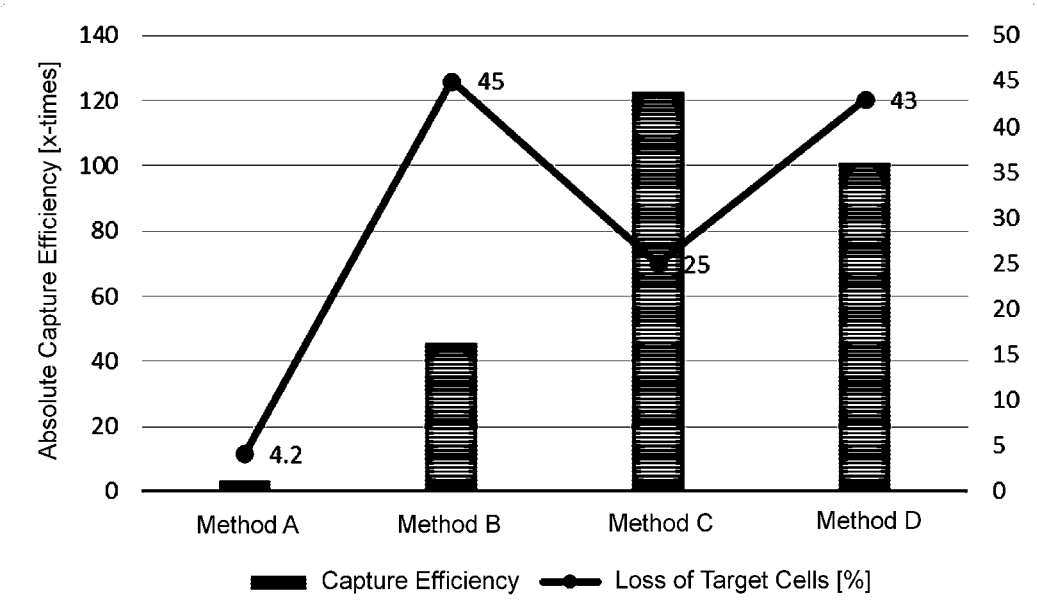
Absolute Capture Efficiency [x-times]
140
120
100
80
60
40
20
0
50
45
40
35
30
25
20
15
10
5
0
4.2
45
25
43
Method A
Method B
Method C
Method D
Capture Efficiency
Loss of Target Cells [%]

Fig. 6

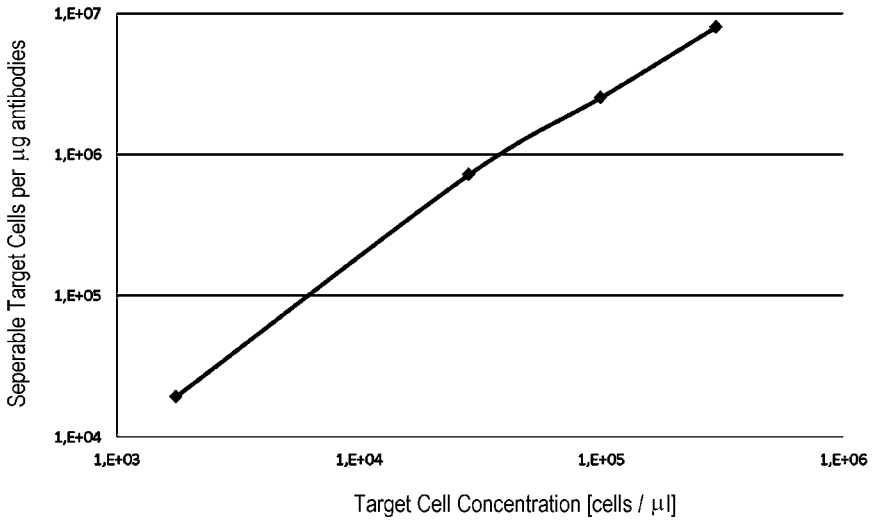
Seperable Target Cells per µg antibodies
1,E+07
1,E+06
1,E+05
1,E+04
1,E+03
1,E+04
1,E+05
1,E+06
Target Cell Concentration [cells / µl]

Fig. 7

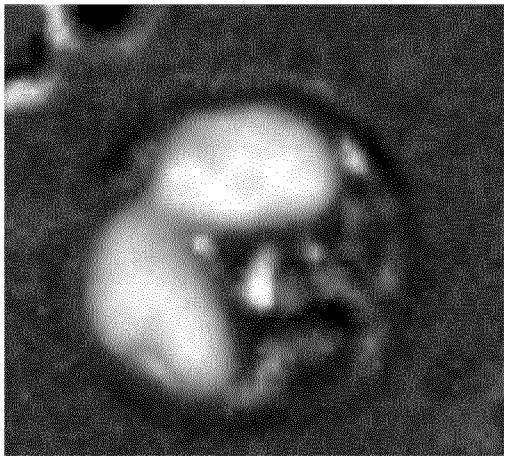

Fig. 8

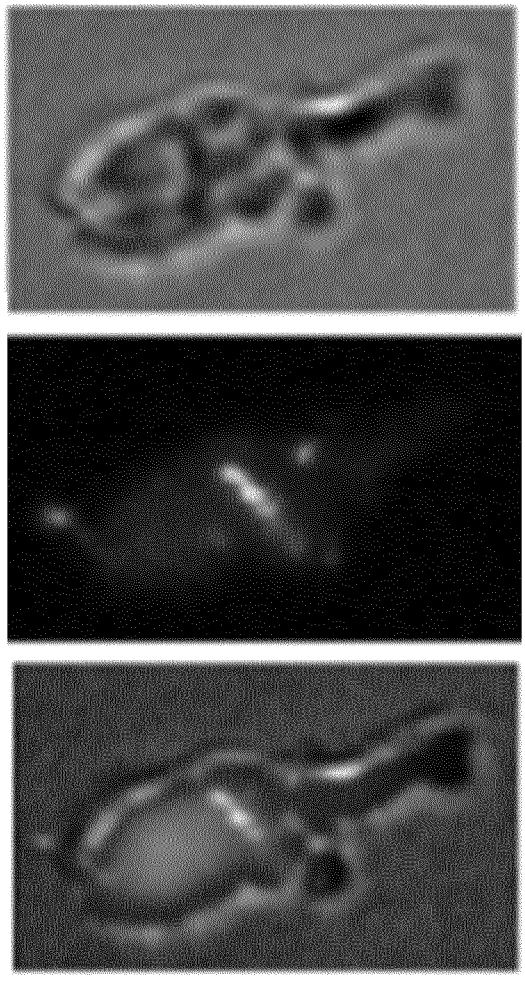

Fig. 9