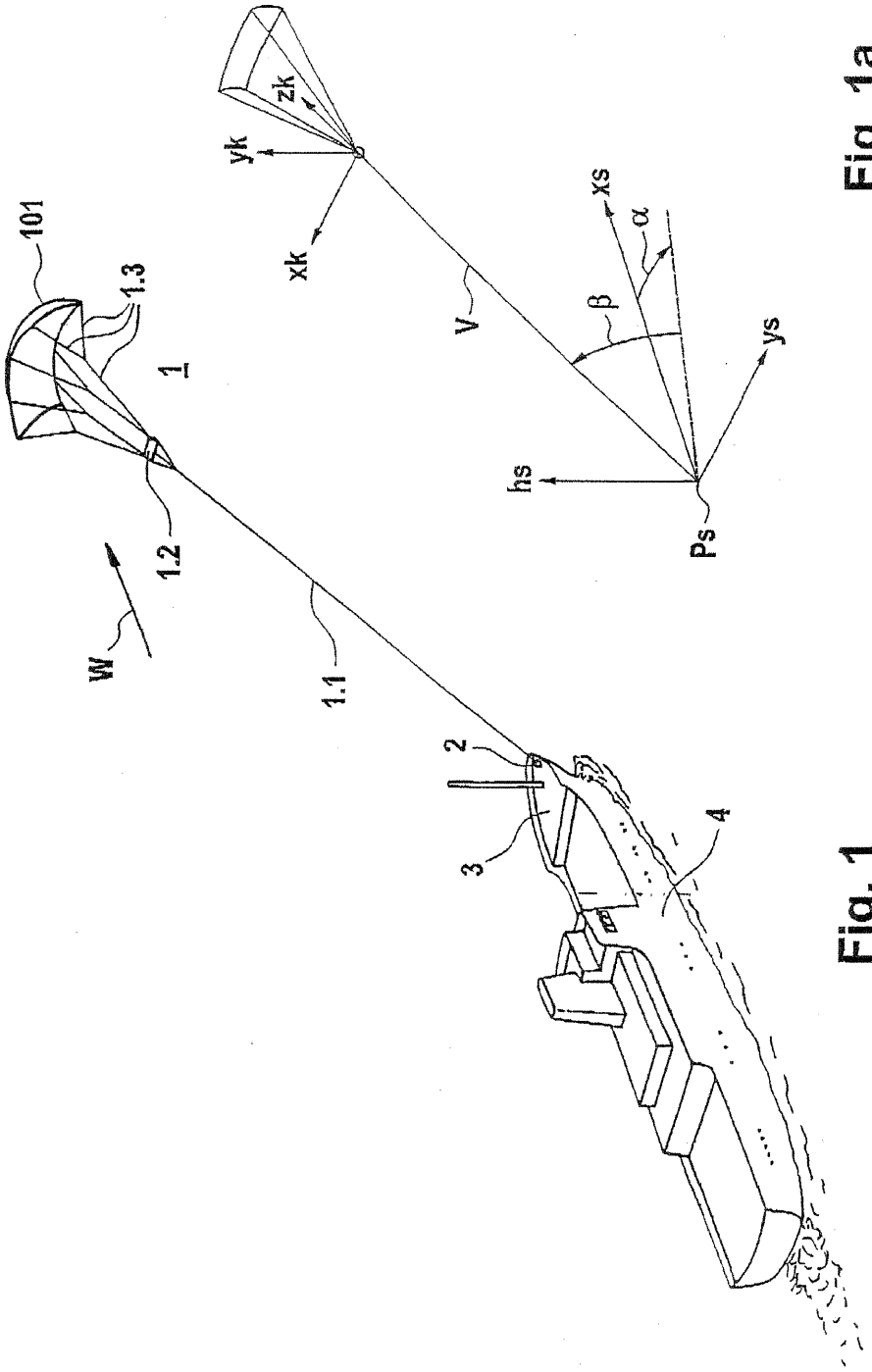

Fig. 1

Fig. 1a

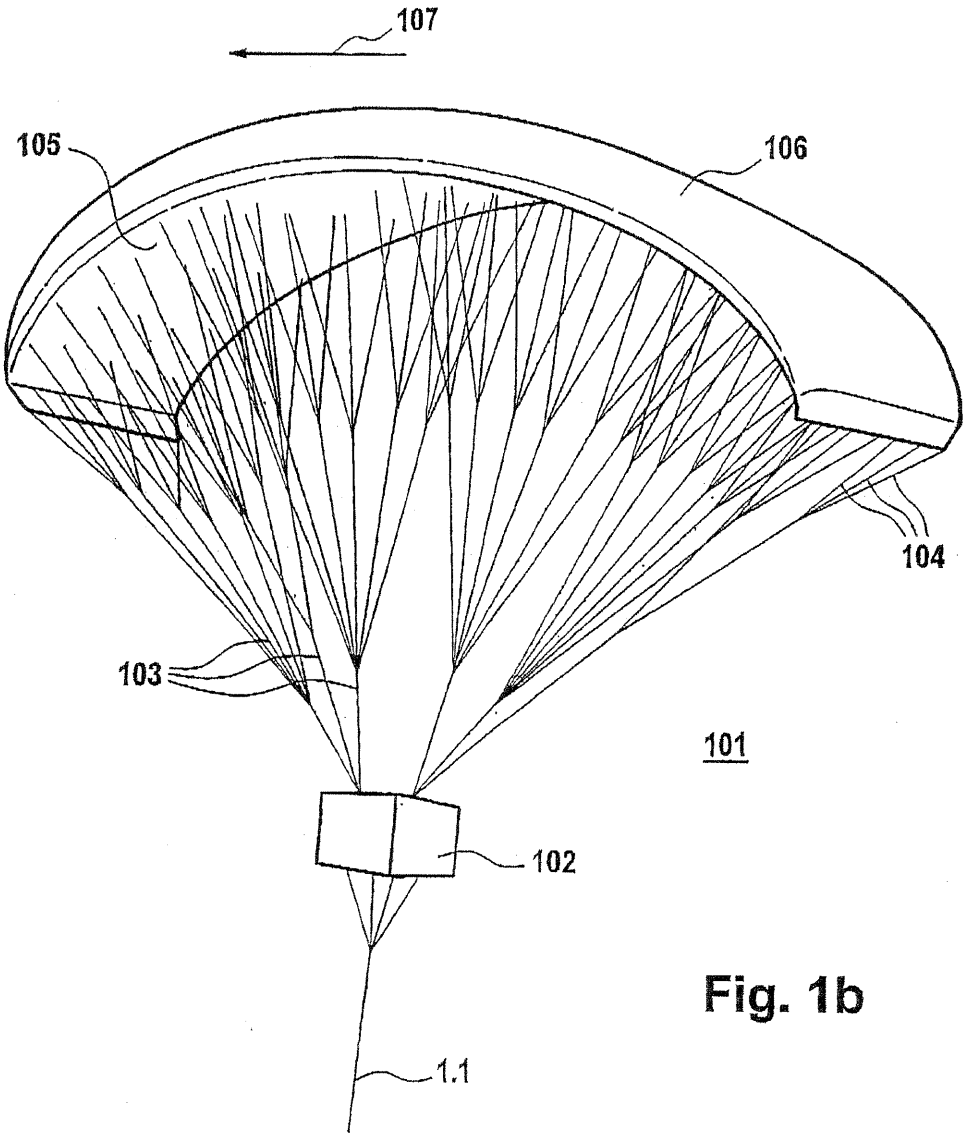

Fig. 1b

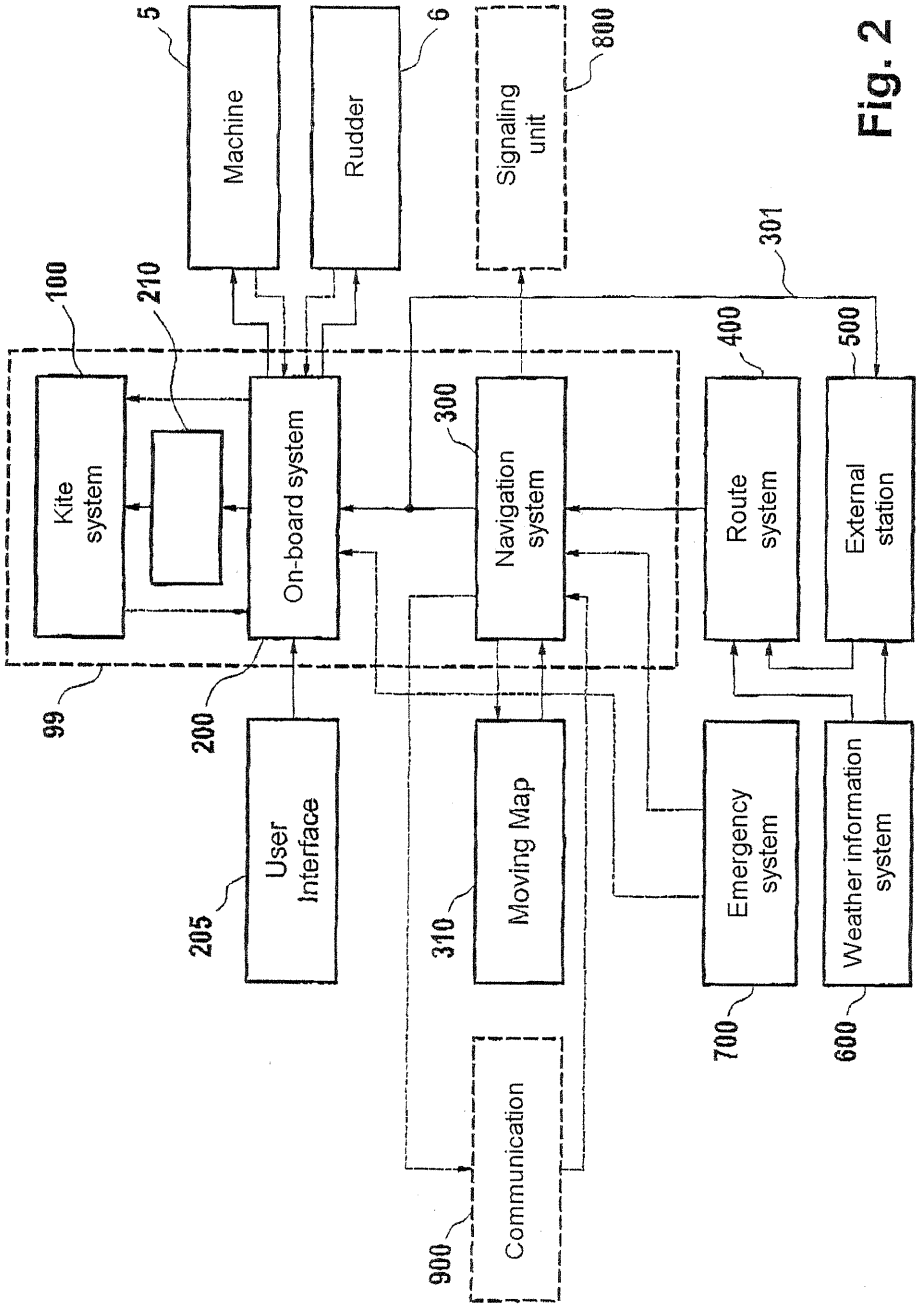
5
Machine
6
Rudder
800
Signaling unit
301
100
210
400
500
Kite system
On-board system
300
Navigation system
Route system
External station
99
200
205
User Interface
310
Moving Map
Emergency system
Weather information system
700
600
900
Communication

Fig. 2

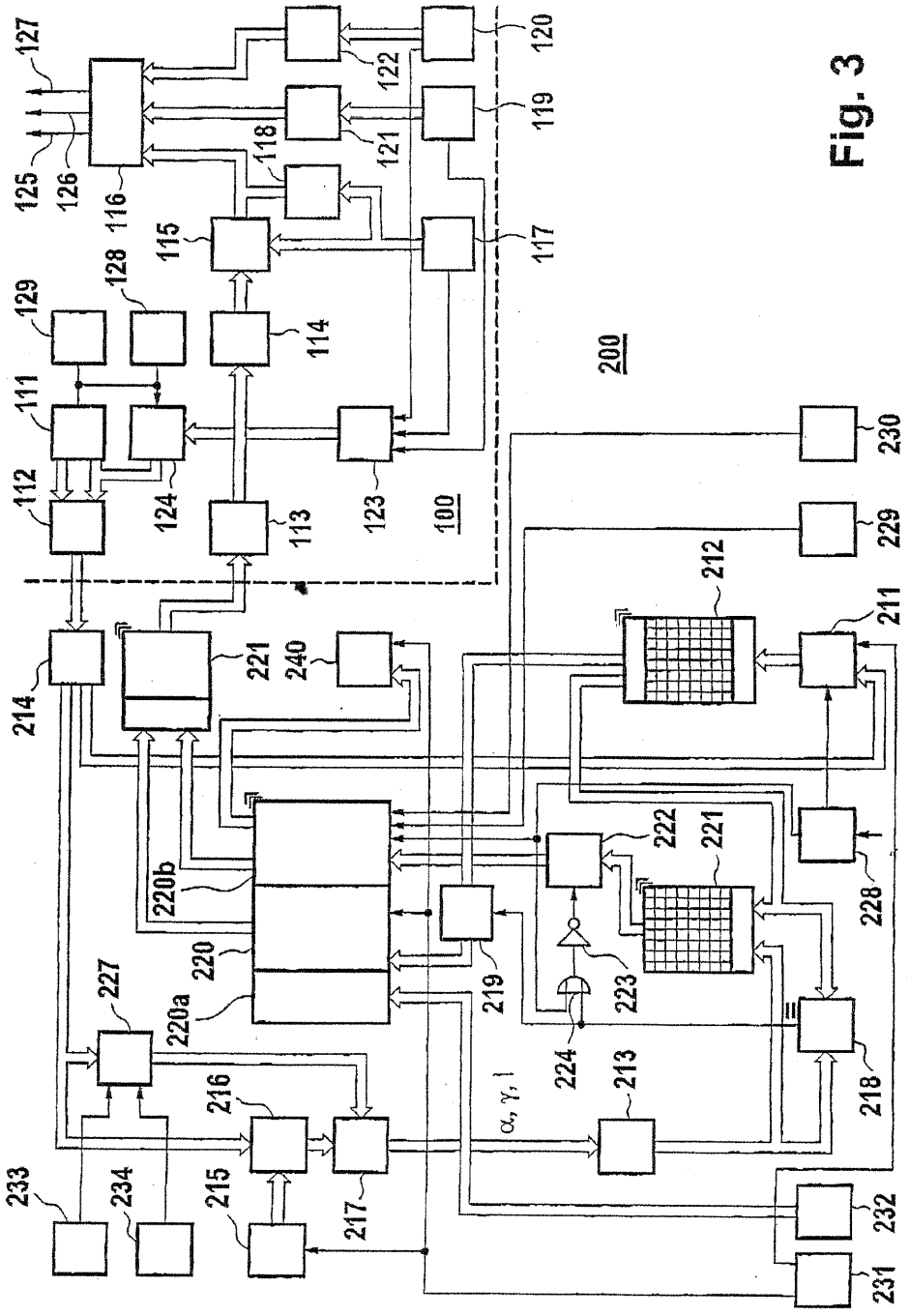
127
125
126
116
118
122
121
120
119
115
117
128
129
114
111
112
124
113
123
100
200
230
229
212
211
214
221
240
222
221
220b
220
220a
227
219
223
224
228
218
213
α, γ, 1
216
217
215
233
234
232
231

Fig. 3

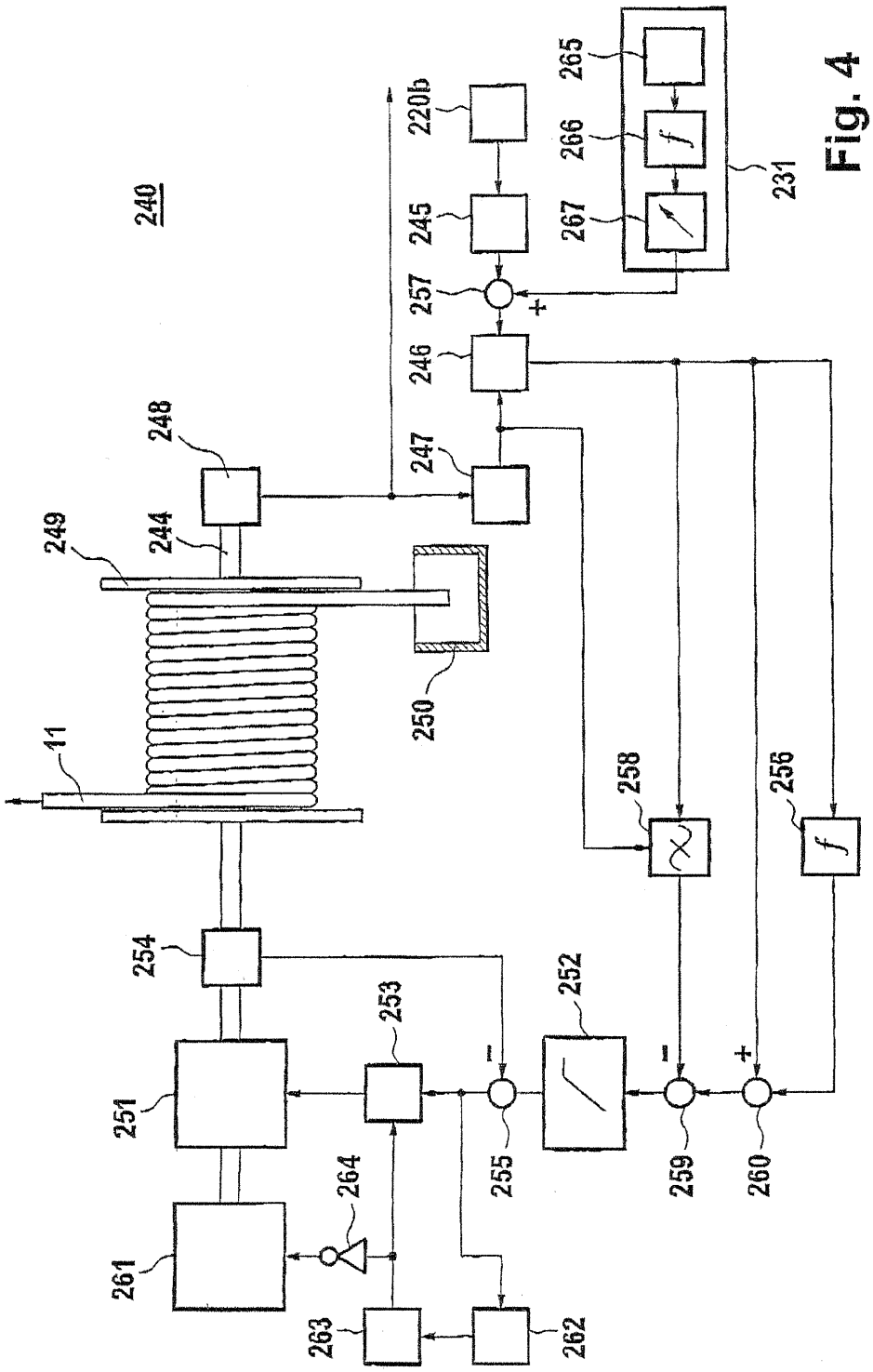
240
11
220b
245
257
246
247
248
249
244
250
265
266
267
231
258
256
254
253
252
251
255
259
260
264
261
263
262

Fig. 4