(12) INTERNATIONAL APPLICATION PUBLISHED UNDER THE PATENT COOPERATION TREATY (PCT)

(19) World Intellectual Property Organization
International Bureau

(43) International Publication Date
2 June 2005 (02.06.2005)

PCT

(10) International Publication Number
WO 2005/049466 A1

(51) International Patent Classification[7]: B66B 5/00

(21) International Application Number:
PCT/FI2004/000181

(22) International Filing Date: 29 March 2004 (29.03.2004)

(25) Filing Language: Finnish

(26) Publication Language: English

(30) Priority Data:
20031720 24 November 2003 (24.11.2003) FI

(71) Applicant *(for all designated States except US)*: **KONE CORPORATION** [FI/FI]; Kartanontie 1, FI-00330 Helsinki (FI).

(72) Inventors; and

(75) Inventors/Applicants *(for US only)*: **ANTTILA, Aripekka** [FI/FI]; Poukanpolku 5, FI-00440 Järvenpää (FI). **AULANKO, Esko** [FI/FI]; Käenkatu 6 C 33, FI-04230 Kerava (FI). **BÄRNEMAN, Håkan** [SE/SE]; Klipgatan 12 A, S-17147 Solna (SE). **BJÖRNI, Osmo** [FI/FI]; Pajuntie 3, FI-04400 Järvenpää (FI).

(74) Agent: **KONE CORPORATION/Patent Department**; P.O. Box 677, FI-05801 Hyvinkää (FI).

(81) Designated States *(unless otherwise indicated, for every kind of national protection available)*: AE, AG, AL, AM, AT, AU, AZ, BA, BB, BG, BR, BW, BY, BZ, CA, CH, CN, CO, CR, CU, CZ, DE, DK, DM, DZ, EC, EE, EG, ES, FI, GB, GD, GE, GH, GM, HR, HU, ID, IL, IN, IS, JP, KE, KG, KP, KR, KZ, LC, LK, LR, LS, LT, LU, LV, MA, MD, MG, MK, MN, MW, MX, MZ, NA, NI, NO, NZ, OM, PG, PH, PL, PT, RO, RU, SC, SD, SE, SG, SK, SL, SY, TJ, TM, TN, TR, TT, TZ, UA, UG, US, UZ, VC, VN, YU, ZA, ZM, ZW.

(84) Designated States *(unless otherwise indicated, for every kind of regional protection available)*: ARIPO (BW, GH, GM, KE, LS, MW, MZ, SD, SL, SZ, TZ, UG, ZM, ZW),

[Continued on next page]

(54) Title: ELEVATOR

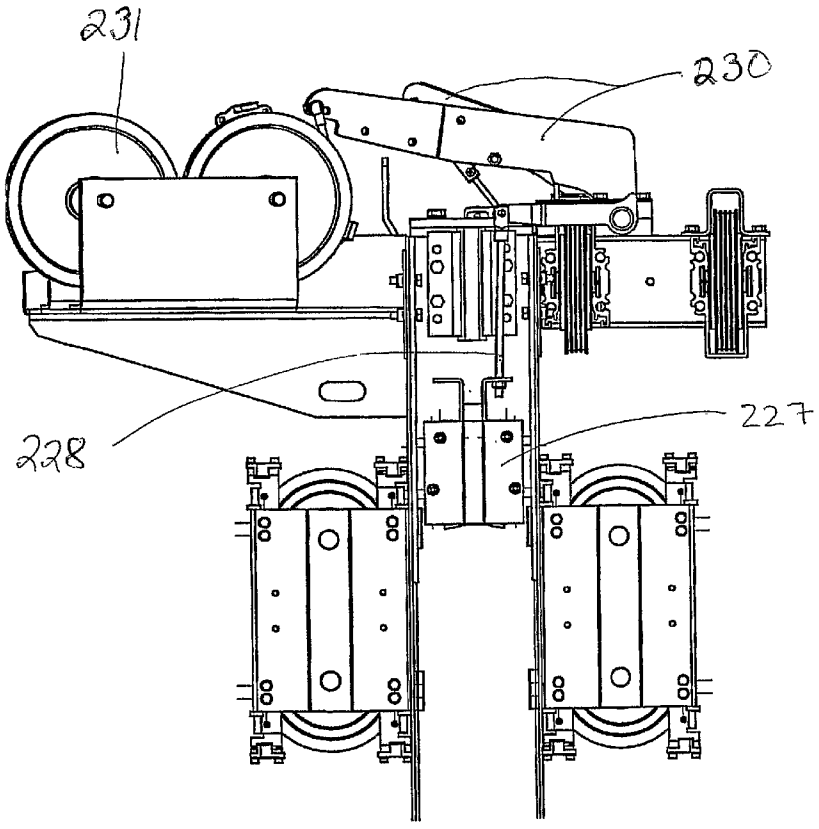

(57) Abstract: An elevator, preferably an elevator without counterweight, wherein the elevator car is suspended by hoisting ropes consisting of a single rope or a plurality of parallel ropes. The elevator has a traction sheave which moves the elevator car by means of the hoisting ropes. The elevator has rope portions of the hoisting ropes going upwards and downwards from the elevator car, and the elevator is provided with a safety gear (227) fitted in conjunction with the elevator car and engaging a guide rail. The elevator is provided with a locking mechanism (228) fitted in conjunction with the elevator car for locking the elevator car in place, said mechanism comprising means (230) for activating and releasing the safety gear fitted on the elevator car.

WO 2005/049466 A1

Eurasian (AM, AZ, BY, KG, KZ, MD, RU, TJ, TM), European (AT, BE, BG, CH, CY, CZ, DE, DK, EE, ES, FI, FR, GB, GR, HU, IE, IT, LU, MC, NL, PL, PT, RO, SE, SI, SK, TR), OAPI (BF, BJ, CF, CG, CI, CM, GA, GN, GQ, GW, ML, MR, NE, SN, TD, TG).

For two-letter codes and other abbreviations, refer to the "Guidance Notes on Codes and Abbreviations" appearing at the beginning of each regular issue of the PCT Gazette.

Published:

— *with international search report*