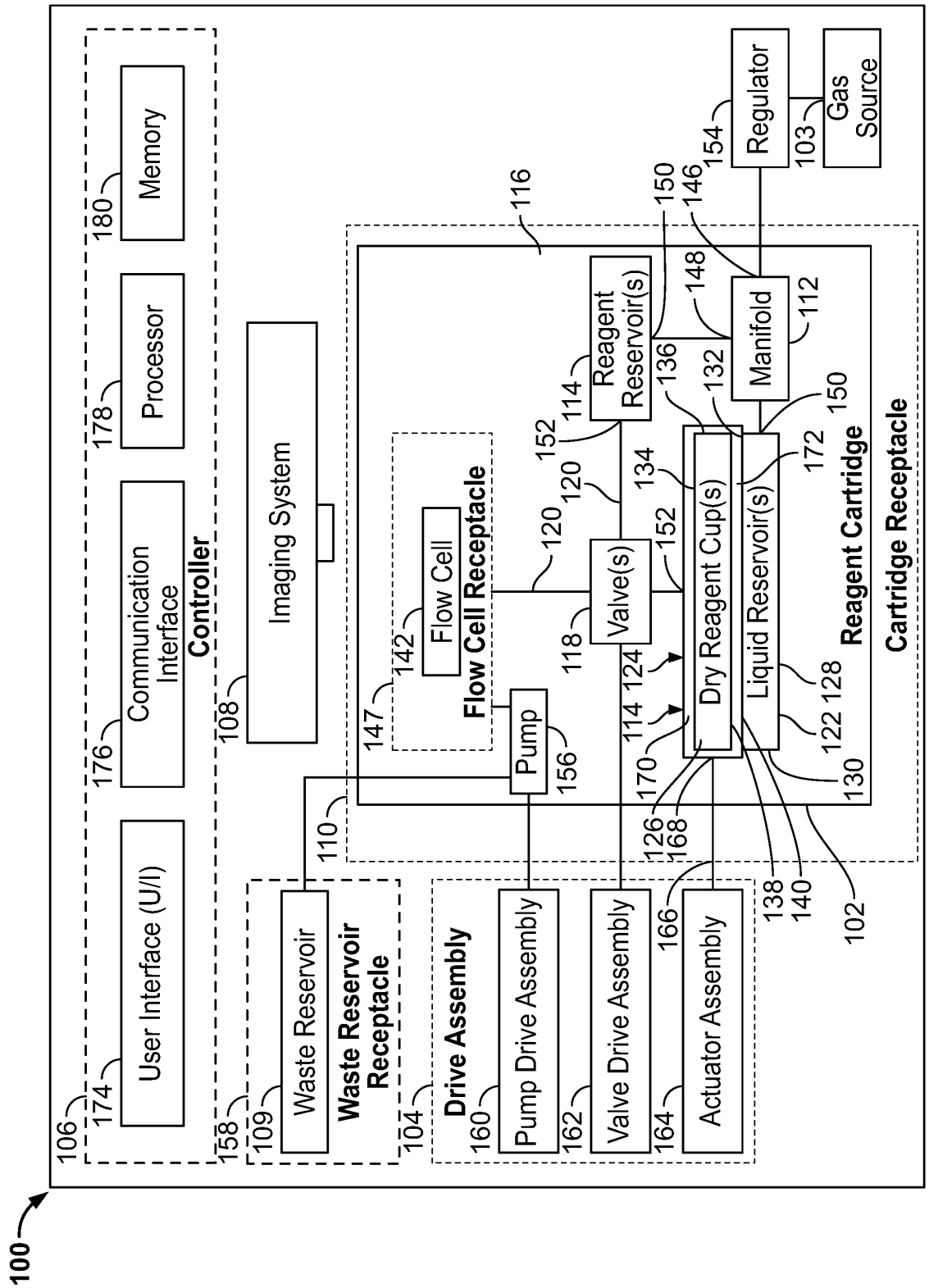
100
106
174
User Interface (U/I)
176
Communication Interface
178
Processor
180
Memory
Controller
108
Imaging System
158
109
Waste Reservoir
Waste Reservoir Receptacle
104
Drive Assembly
160
Pump Drive Assembly
162
Valve Drive Assembly
164
Actuator Assembly
110
116
147
142
Flow Cell
Flow Cell Receptacle
Pump
156
118
Valve(s)
120
114
Reagent Reservoir(s)
152
136
132
134
Dry Reagent Cup(s)
Liquid Reservoir(s)
172
150
148
Manifold
112
146
154
Regulator
103
Gas Source
Reagent Cartridge
Cartridge Receptacle
124
170
126
168
166
138
140
102
122
128
130

FIG. 1

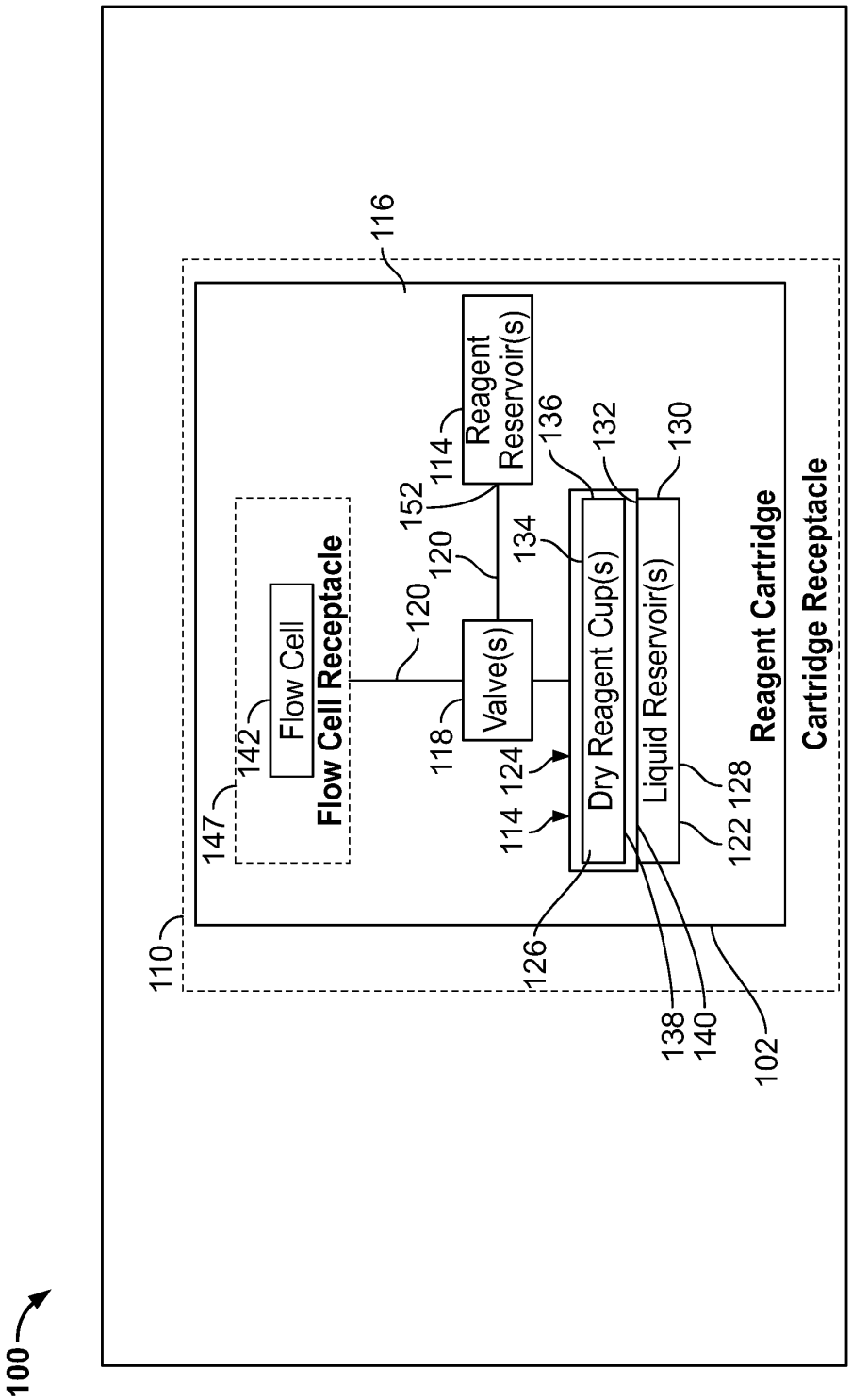
100
110
116
Cartridge Receptacle
Reagent Cartridge
Flow Cell Receptacle
Flow Cell
142
147
Valve(s)
118
Reagent Reservoir(s)
114
152
120
120
134
136
Dry Reagent Cup(s)
132
Liquid Reservoir(s)
130
114
124
122
128
126
138
140
102

FIG. 2

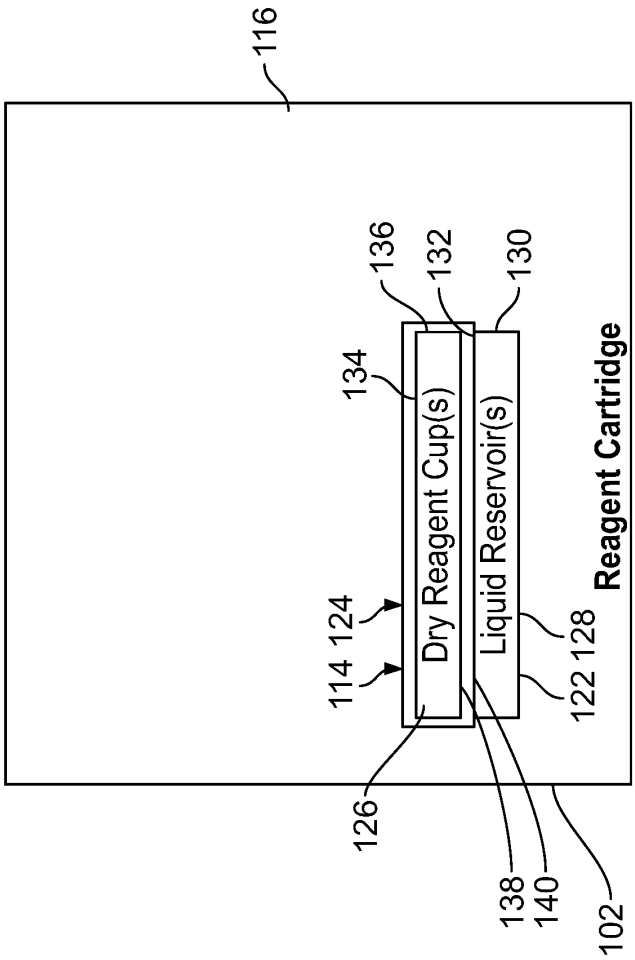
116
136
132
130
134
Dry Reagent Cup(s)
Liquid Reservoir(s)
Reagent Cartridge
114 124
122 128
126
138
140
102

FIG. 3

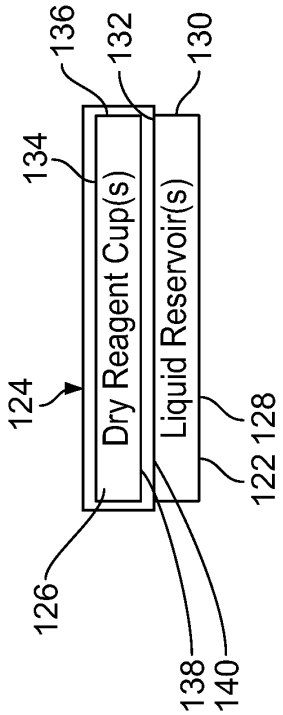
136
132
130
134
Dry Reagent Cup(s)
Liquid Reservoir(s)
124
122 128
126
138
140

FIG. 4

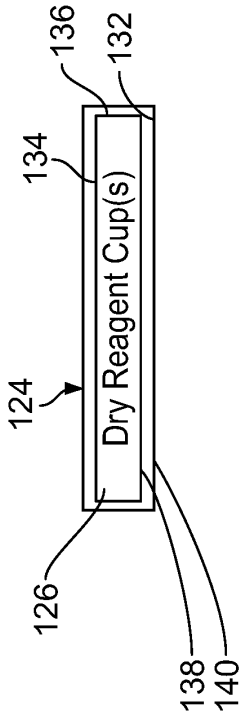

FIG. 5

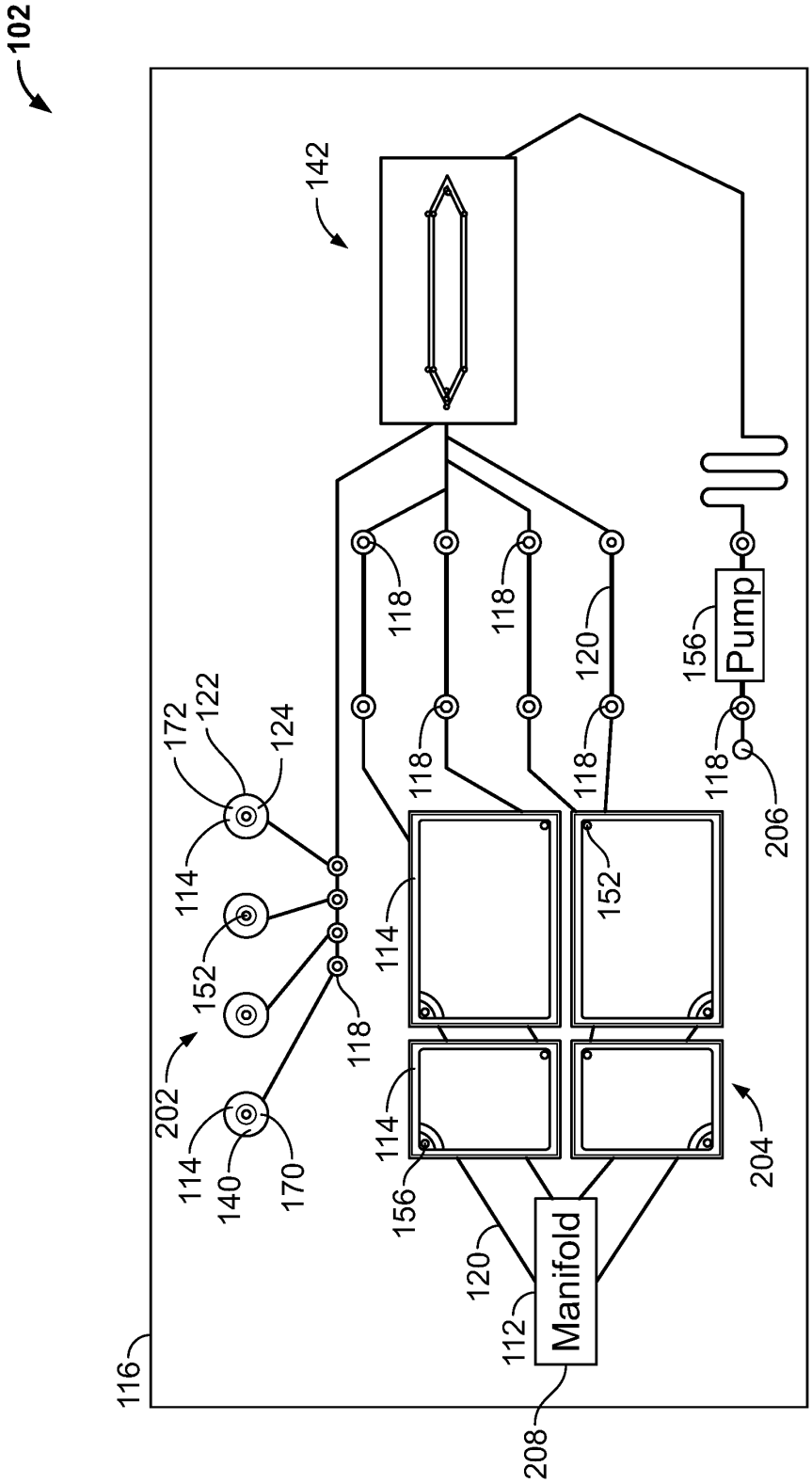
102
142
118
118
120
156
Pump
118
206
172
122
124
114
152
118
202
114
140
170
114
156
114
152
118
204
120
112
Manifold
208
116

FIG. 6

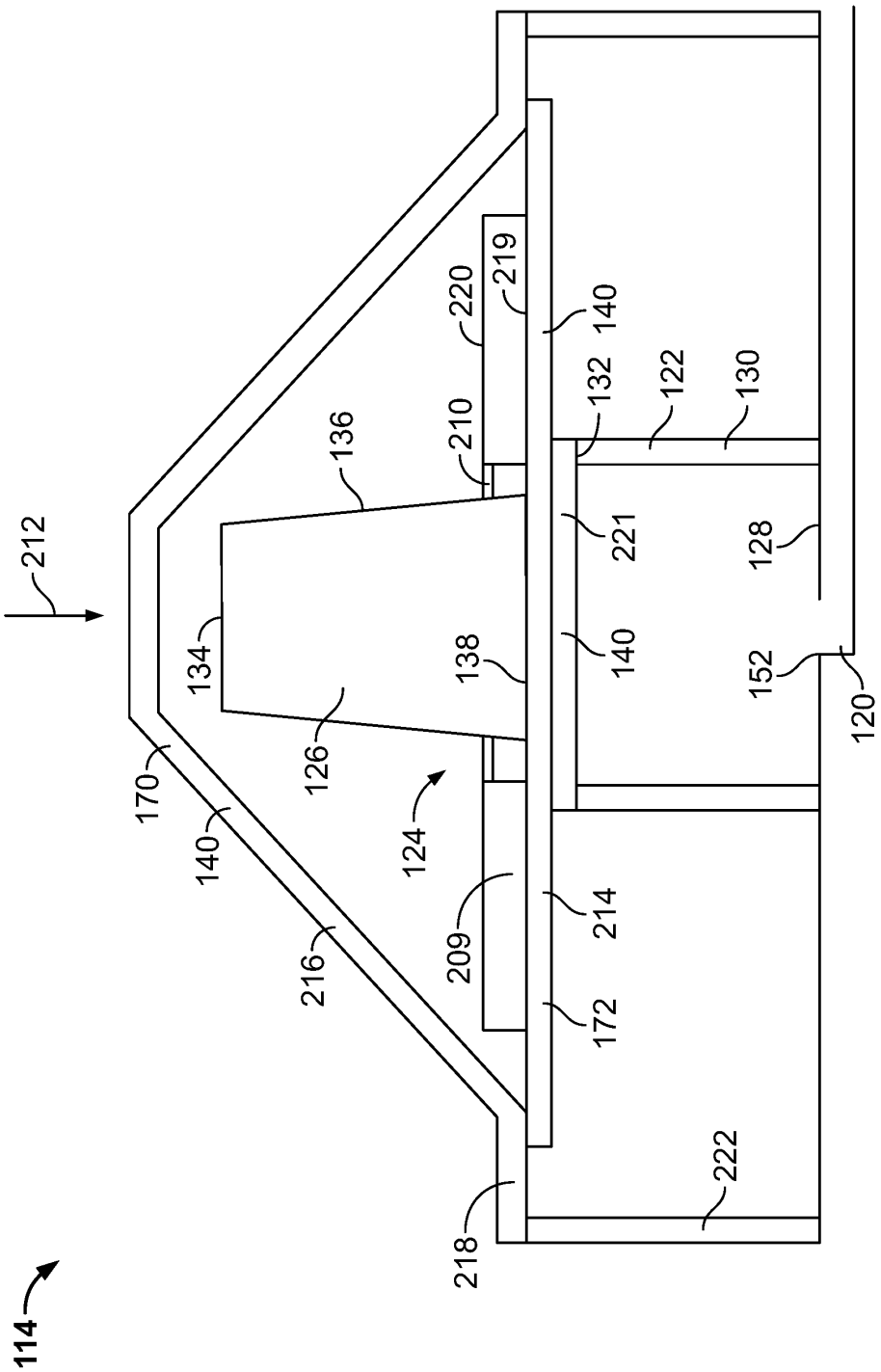
212
136
134
126
170
140
216
124
209
218
114
220
219
210
138
140
214
172
222
132
122
130
221
128
152
120

FIG. 7

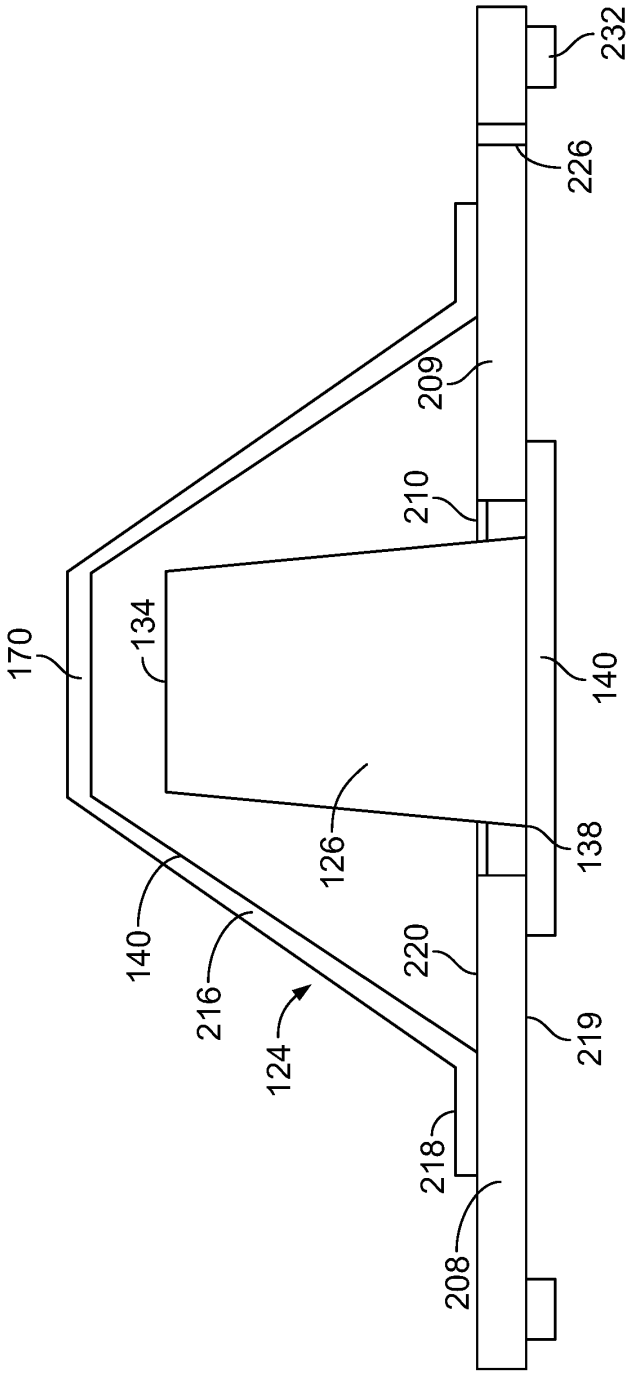

FIG. 8

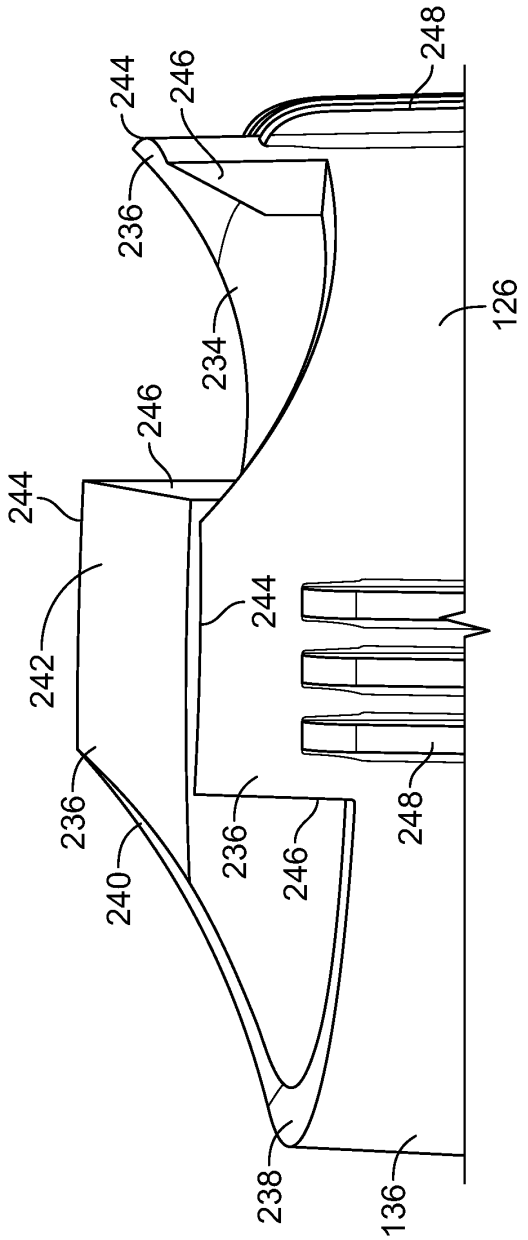
248
244
246
236
126
234
246
244
244
242
236
236
246
248
240
238
136

FIG. 9

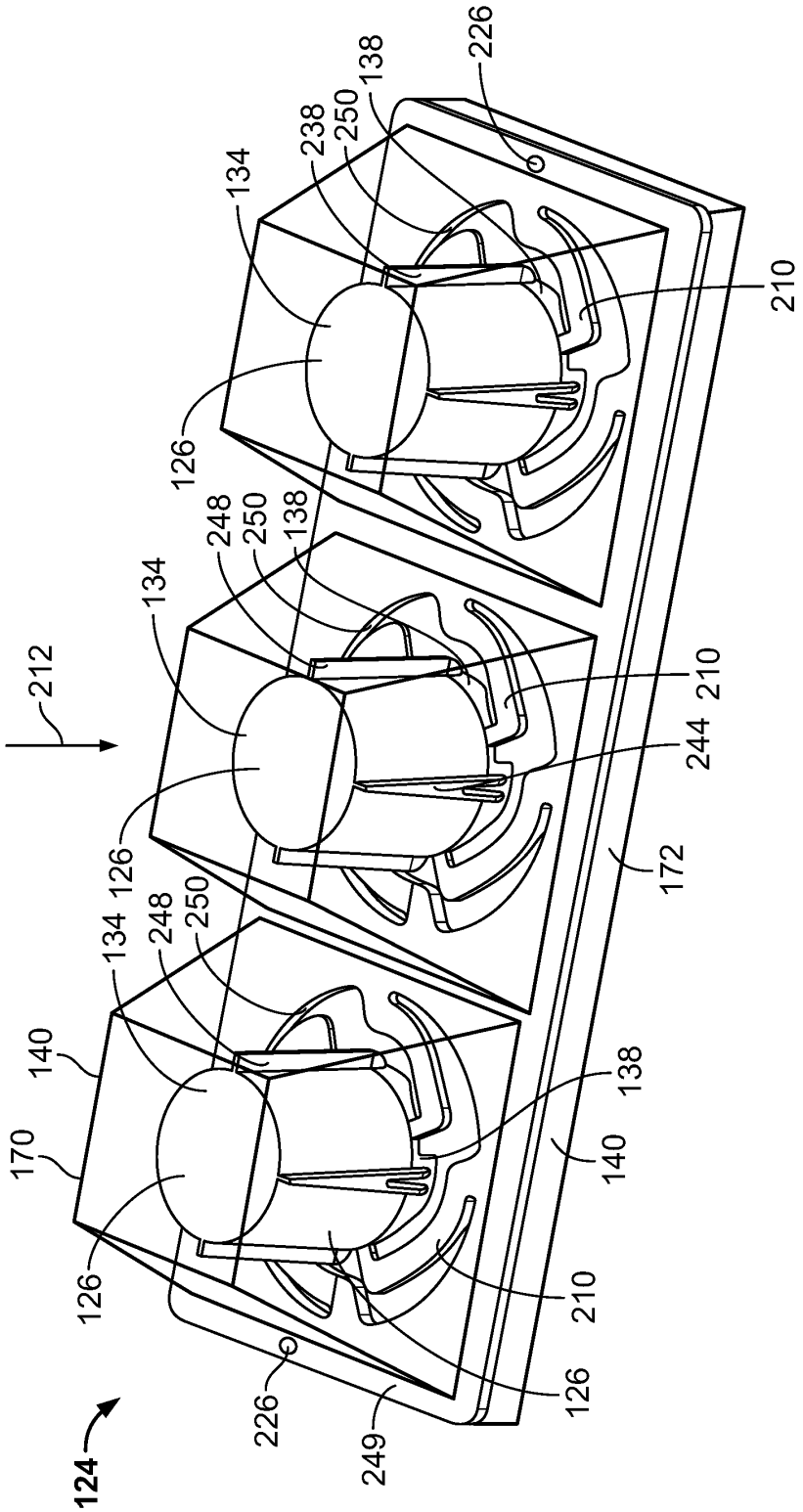
226
138
250
238
134
210
126
248
250
138
134
212
210
244
126
172
134
248
250
140
138
170
140
126
210
226
126
249
124

FIG. 10

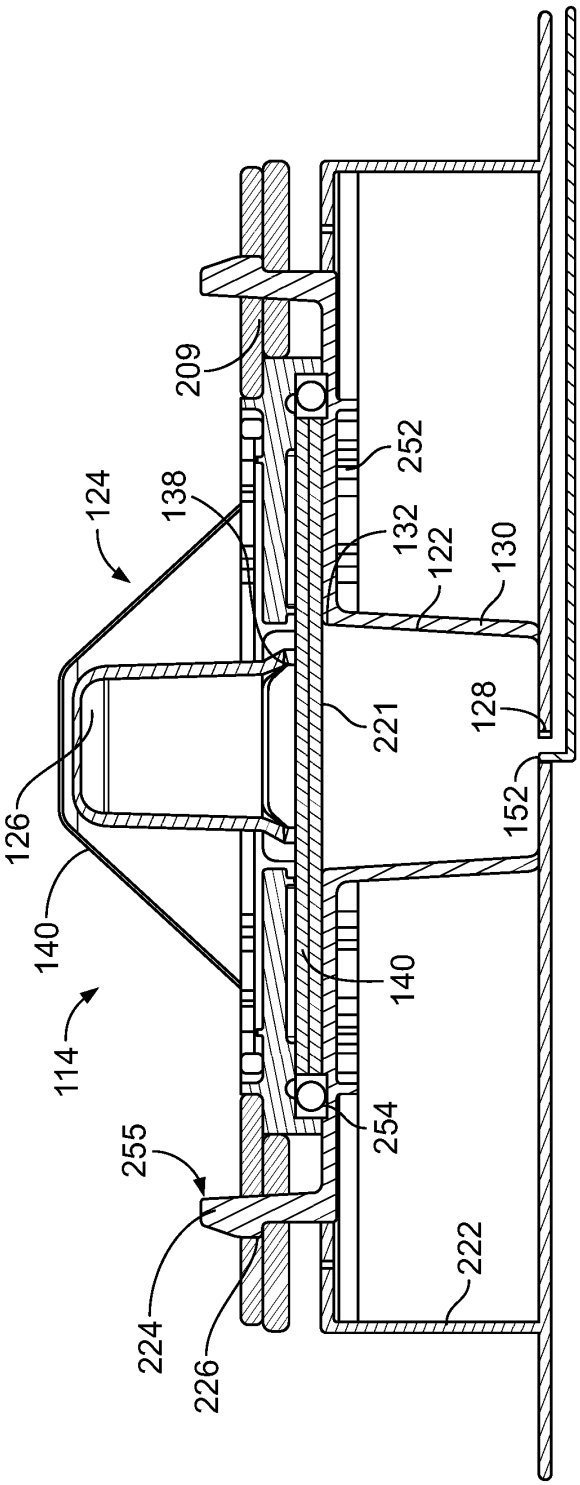
209
252
124
138
132
122
130
221
128
126
152
140
140
114
254
255
222
224
226

FIG. 11

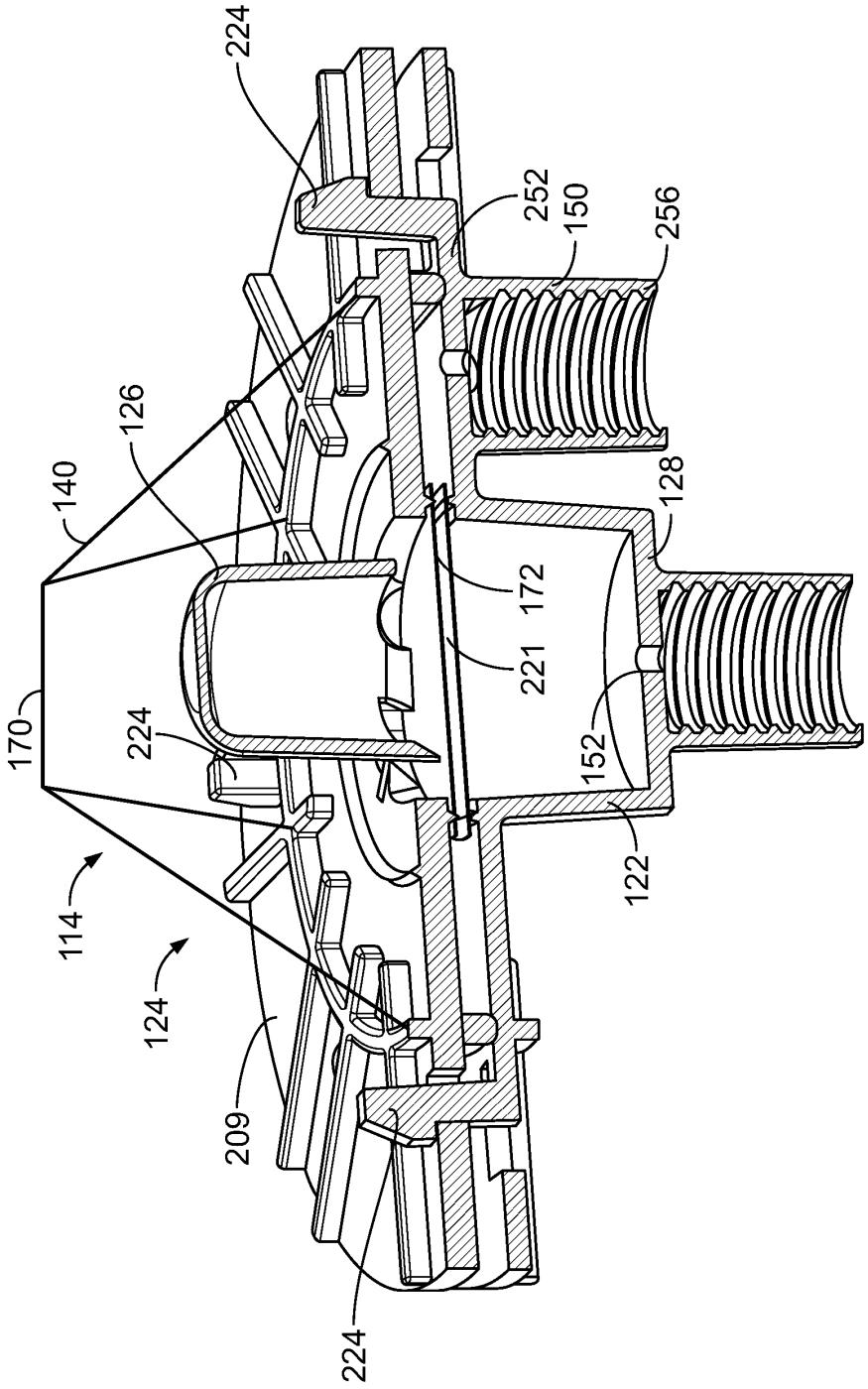
224
252
150
256
126
140
128
172
221
170
224
152
122
114
124
209
224

FIG. 12

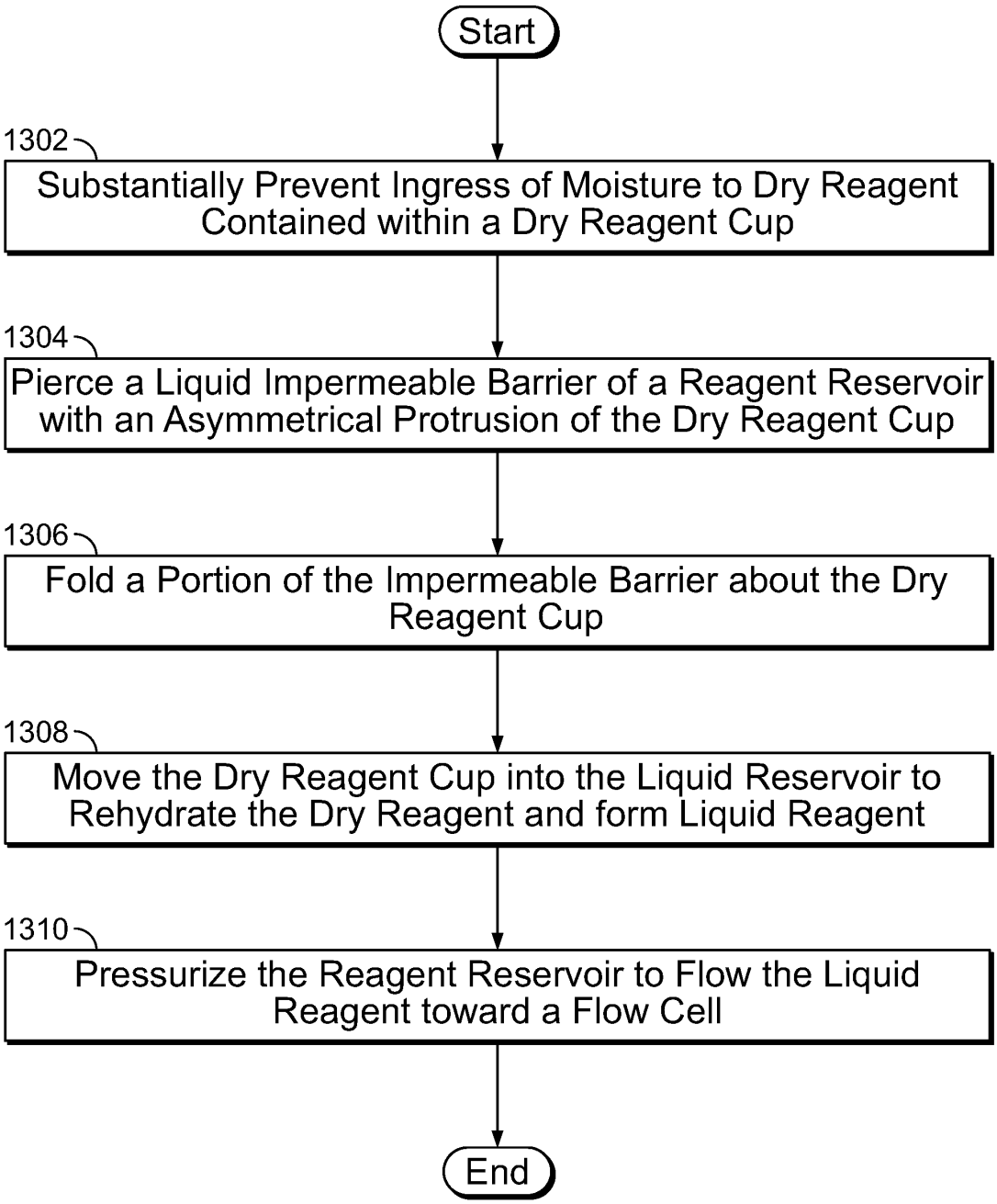
Start
1302
Substantially Prevent Ingress of Moisture to Dry Reagent Contained within a Dry Reagent Cup
1304
Pierce a Liquid Impermeable Barrier of a Reagent Reservoir with an Asymmetrical Protrusion of the Dry Reagent Cup
1306
Fold a Portion of the Impermeable Barrier about the Dry Reagent Cup
1308
Move the Dry Reagent Cup into the Liquid Reservoir to Rehydrate the Dry Reagent and form Liquid Reagent
1310
Pressurize the Reagent Reservoir to Flow the Liquid Reagent toward a Flow Cell
End

FIG. 13

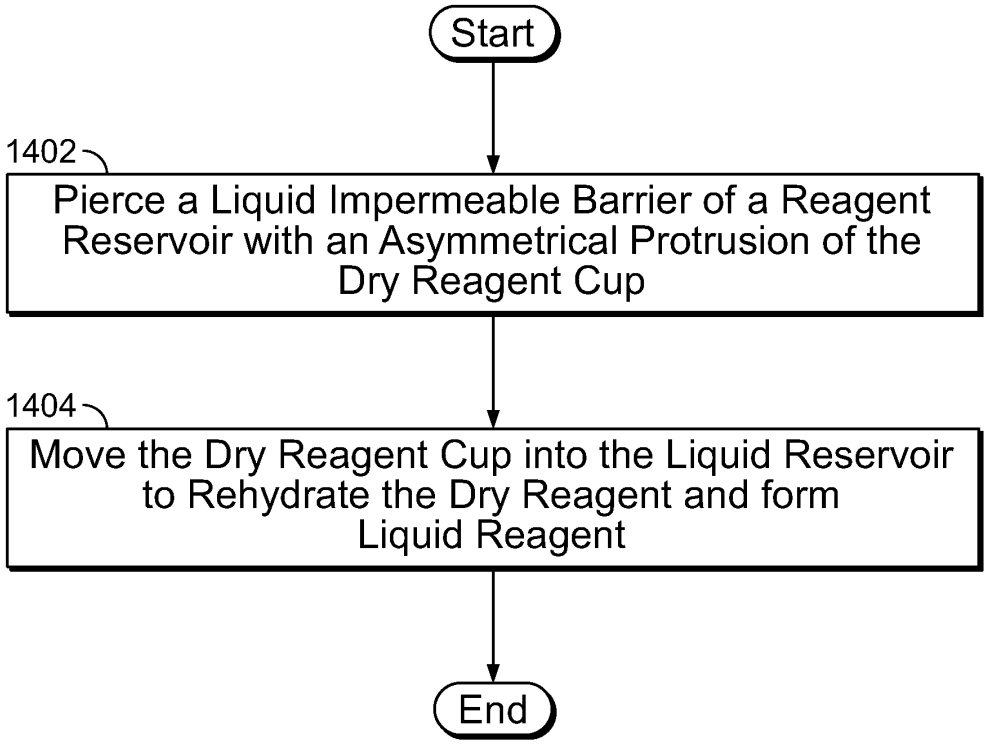
Start
1402
Pierce a Liquid Impermeable Barrier of a Reagent Reservoir with an Asymmetrical Protrusion of the Dry Reagent Cup
1404
Move the Dry Reagent Cup into the Liquid Reservoir to Rehydrate the Dry Reagent and form Liquid Reagent
End

FIG. 14

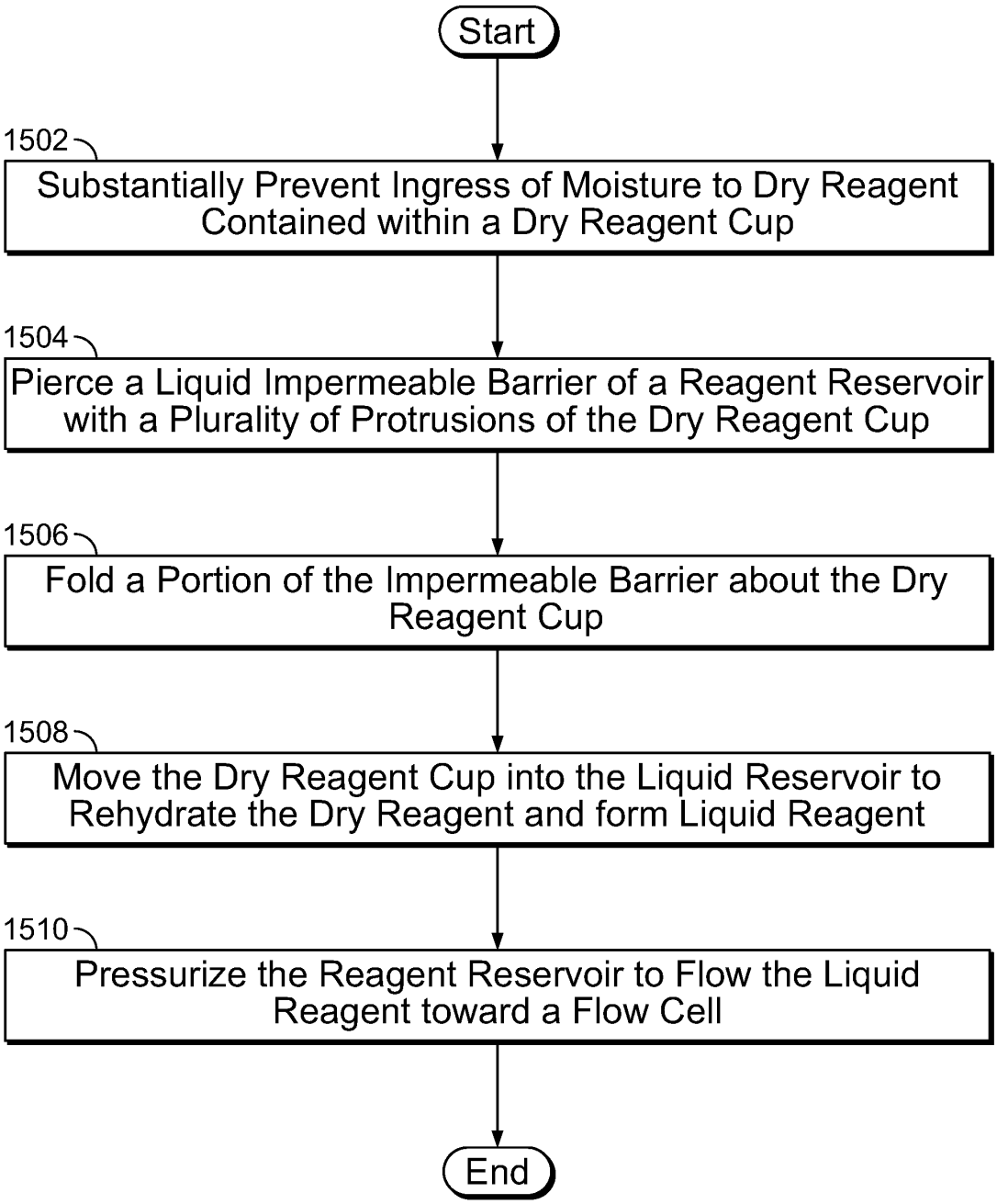
Start
1502
Substantially Prevent Ingress of Moisture to Dry Reagent Contained within a Dry Reagent Cup
1504
Pierce a Liquid Impermeable Barrier of a Reagent Reservoir with a Plurality of Protrusions of the Dry Reagent Cup
1506
Fold a Portion of the Impermeable Barrier about the Dry Reagent Cup
1508
Move the Dry Reagent Cup into the Liquid Reservoir to Rehydrate the Dry Reagent and form Liquid Reagent
1510
Pressurize the Reagent Reservoir to Flow the Liquid Reagent toward a Flow Cell
End

FIG. 15

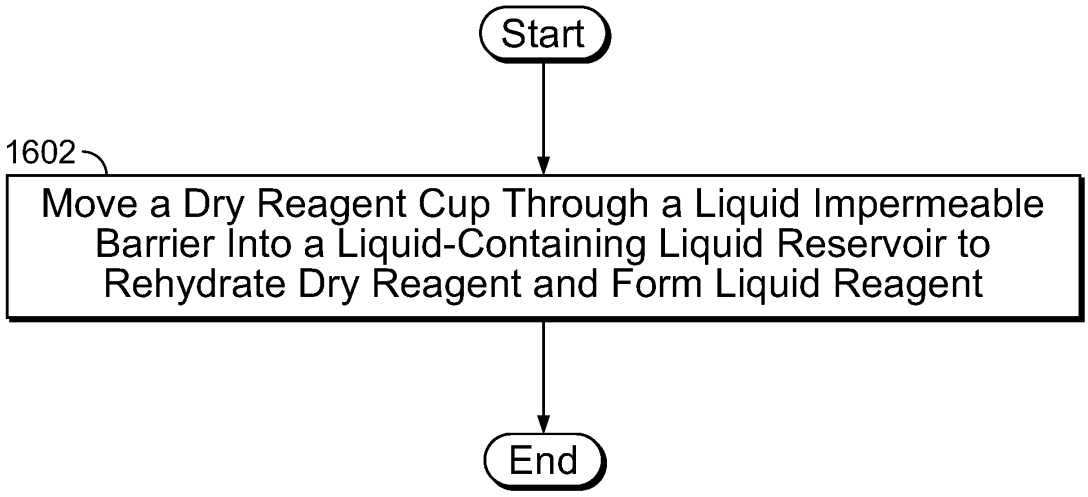
Start
1602
Move a Dry Reagent Cup Through a Liquid Impermeable Barrier Into a Liquid-Containing Liquid Reservoir to Rehydrate Dry Reagent and Form Liquid Reagent
End

FIG. 16