(12) INTERNATIONAL APPLICATION PUBLISHED UNDER THE PATENT COOPERATION TREATY (PCT)

(19) World Intellectual Property Organization
International Bureau

(43) International Publication Date
28 August 2008 (28.08.2008)

PCT

(10) International Publication Number
WO 2008/103417 A1

(51) International Patent Classification:
*C22C 32/00* (2006.01) *C22C 26/00* (2006.01)
*C22C 1/05* (2006.01) *B22F 1/02* (2006.01)

(21) International Application Number:
PCT/US2008/002301

(22) International Filing Date:
21 February 2008 (21.02.2008)

(25) Filing Language: English

(26) Publication Language: English

(30) Priority Data:
11/678,304 23 February 2007 (23.02.2007) US

(71) Applicant *(for all designated States except US)*: **BAKER HUGHES INCORPORATED** [US/US]; P.O. Box 4740, Houston, TX 77210-4740 (US).

(72) Inventors; and
(75) Inventors/Applicants *(for US only)*: **McCLAIN, Eric, E.** [US/US]; 31323 Trinity Park Lane, Spring, TX 77386 (US). **SCOTT, Dan, E.** [US/US]; 3015 Poe, Montgomery, TX 77356 (US). **FULLER, Wesley, Dean** [US/US]; 11792 Shepard Hill Road, Willis, TX 77318 (US). **WELCH, Robert, M.** [US/US]; 27 South Crisp Morning Circle, The Woodlands, TX 77382 (US). **EASON, Jimmy, W.** [US/US]; 34 Crested Point Place, The Woodlands, TX 77382 (US). **SKEEM, Marcus, R.** [US/US]; 9910 Aplomado Drive, Sandy, UT 84092 (US). **BRACKIN, Van, J.** [US/US]; 134 West Greywing Circle, Spring, TX 77380 (US).

(74) Agents: **WELBORN, Brian, S.** et al.; Baker Hughes Incorporated, P.O. Box 4740, Houston, TX 77210-4740 (US).

(81) Designated States *(unless otherwise indicated, for every kind of national protection available)*: AE, AG, AL, AM, AO, AT, AU, AZ, BA, BB, BG, BH, BR, BW, BY, BZ, CA, CH, CN, CO, CR, CU, CZ, DE, DK, DM, DO, DZ, EC, EE, EG, ES, FI, GB, GD, GE, GH, GM, GT, HN, HR, HU, ID, IL, IN, IS, JP, KE, KG, KM, KN, KP, KR, KZ, LA, LC, LK, LR, LS, LT, LU, LY, MA, MD, ME, MG, MK, MN, MW, MX, MY, MZ, NA, NG, NI, NO, NZ, OM, PG, PH, PL, PT, RO, RS, RU, SC, SD, SE, SG, SK, SL, SM, SV, SY, TJ, TM, TN, TR, TT, TZ, UA, UG, US, UZ, VC, VN, ZA, ZM, ZW.

(84) Designated States *(unless otherwise indicated, for every kind of regional protection available)*: ARIPO (BW, GH, GM, KE, LS, MW, MZ, NA, SD, SL, SZ, TZ, UG, ZM, ZW), Eurasian (AM, AZ, BY, KG, KZ, MD, RU, TJ, TM), European (AT, BE, BG, CH, CY, CZ, DE, DK, EE, ES, FI, FR, GB, GR, HR, HU, IE, IS, IT, LT, LU, LV, MC, MT, NL, NO, PL, PT, RO, SE, SI, SK, TR), OAPI (BF, BJ, CF, CG, CI, CM, GA, GN, GQ, GW, ML, MR, NE, SN, TD, TG).

**Declarations under Rule 4.17:**
— *as to applicant's entitlement to apply for and be granted a patent (Rule 4.17(ii))*
— *as to the applicant's entitlement to claim the priority of the earlier application (Rule 4.17(iii))*

**Published:**
— *with international search report*
— *with amended claims*

**Date of publication of the amended claims:** 23 October 2008

(54) Title: MULTI-LAYER ENCAPSULATION OF DIAMOND GRIT FOR USE IN EARTH-BORING BITS

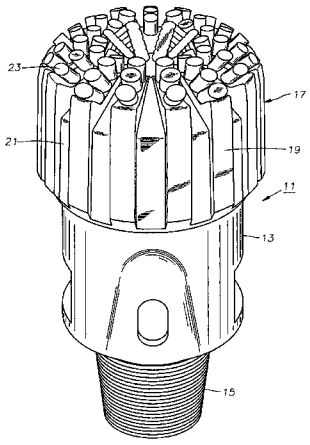


Fig. 1

(57) Abstract: A method of constructing an earth-boring, diamond-impregnated drill bit has a first step of coating diamond grit with tungsten to create tungsten-coated diamond particles. These coated particles are then encapsulated in a layer of carbide powder held by an organic green binder material. The encapsulated granules are then mixed along with a matrix material and placed in a mold. The matrix material includes a matrix binder and abrasive particles. The mixture is heated in the mold at atmospheric pressure to cause the matrix binder to melt and infiltrate the encapsulated granules and abrasive particles.

WO 2008/103417 A1