

FIG. 1A

ROUTE A ROUTE B TO FORM 14′

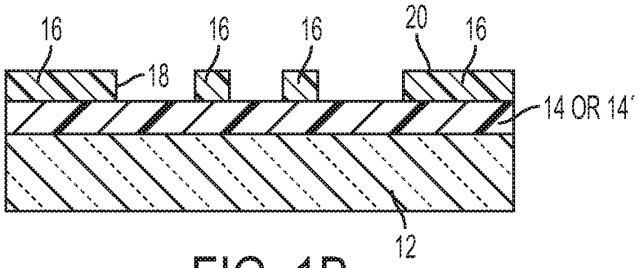

FIG. 1B

TO FIG. 1C

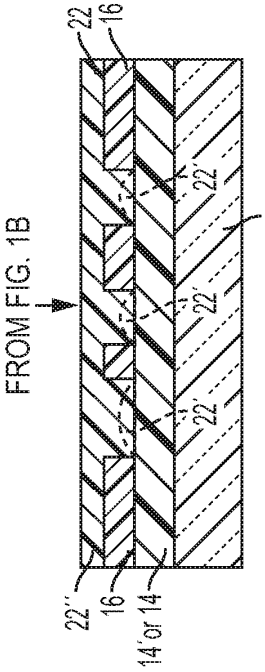

FIG. 1C

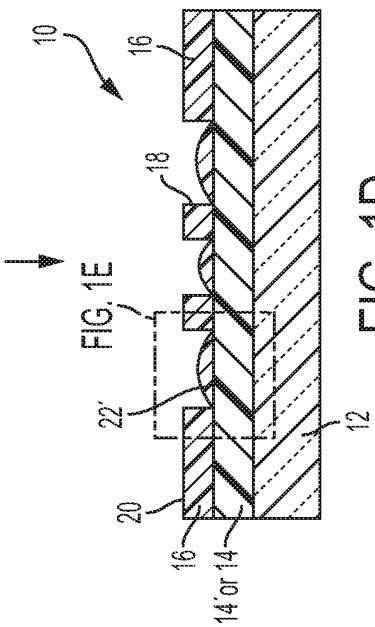

FIG. 1D

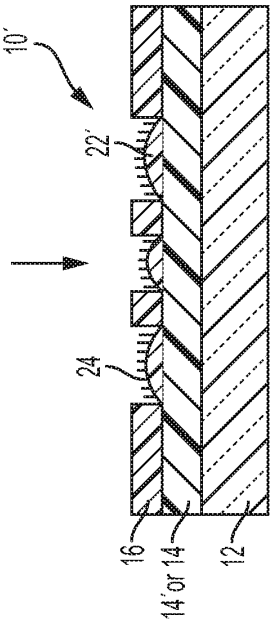

FIG. 1F

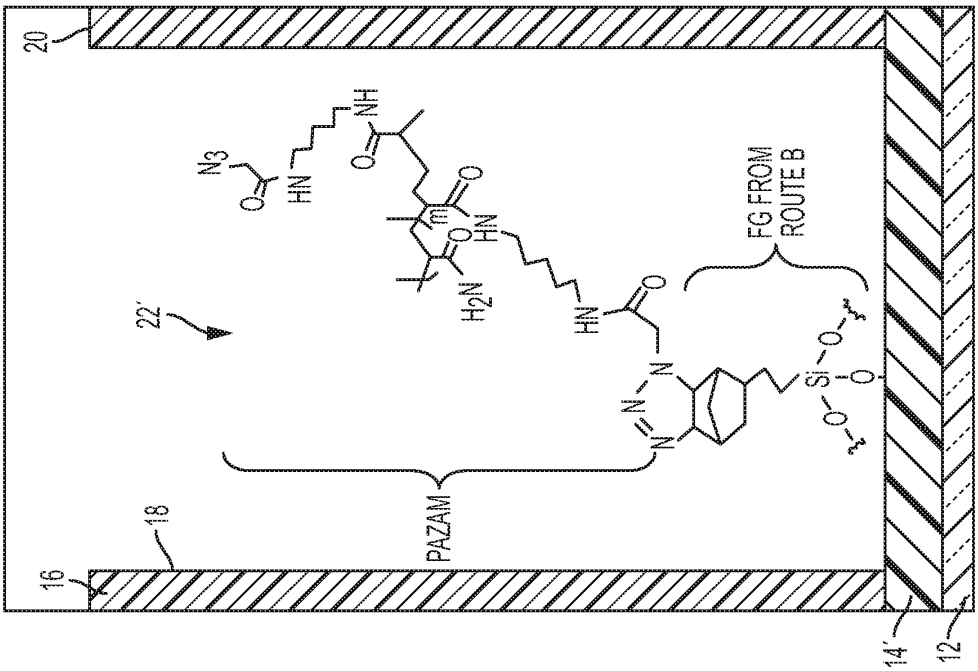

FIG. 1E

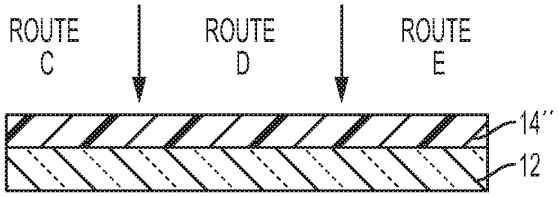

FIG. 2A

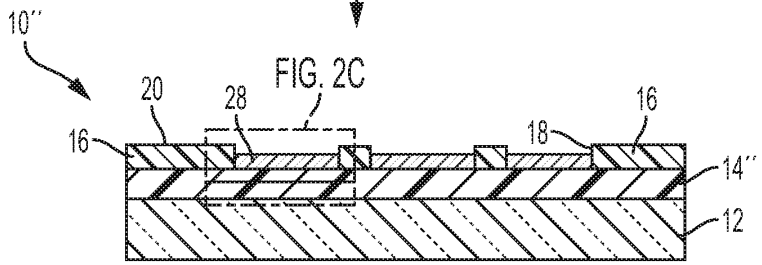

FIG. 2C

FIG. 2B

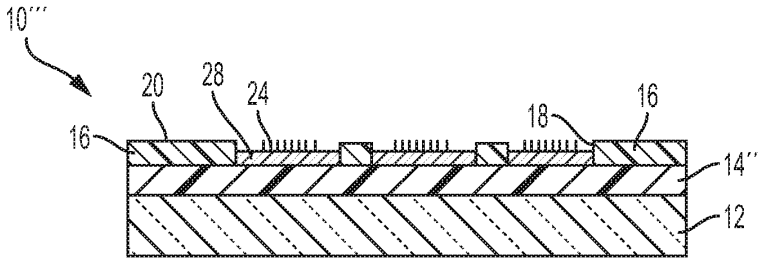

FIG. 2D

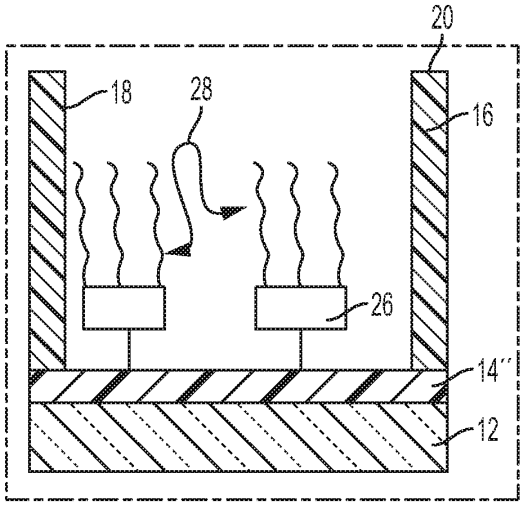

FIG. 2C