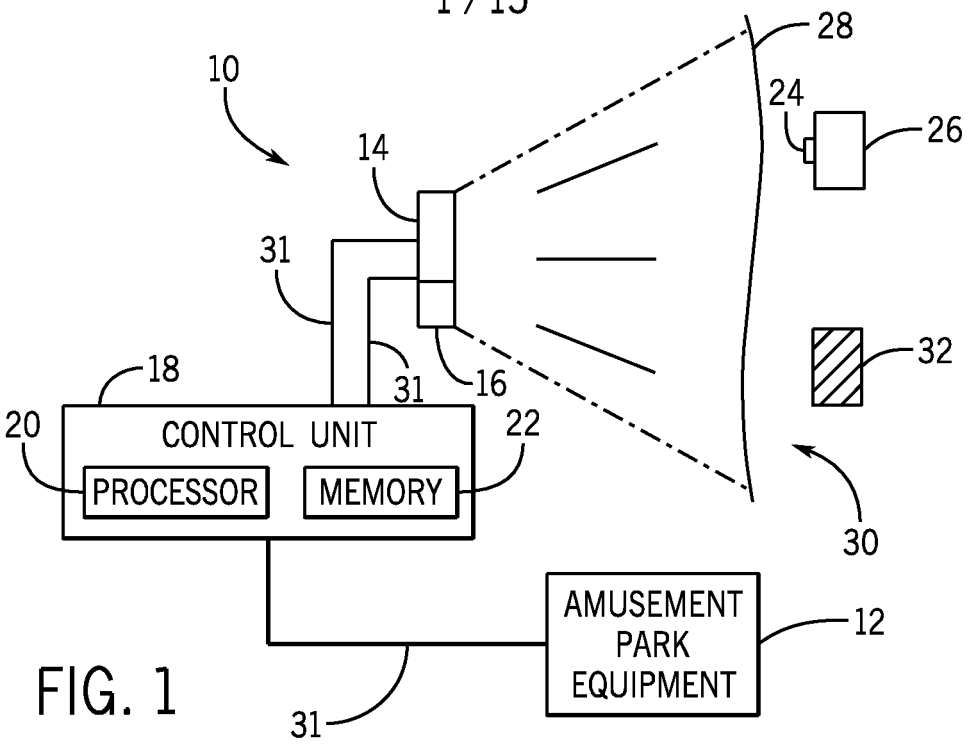
10
14
28
24
26
31
31
18
16
32
20
CONTROL UNIT
22
PROCESSOR
MEMORY
30
AMUSEMENT PARK EQUIPMENT
12
31

FIG. 1

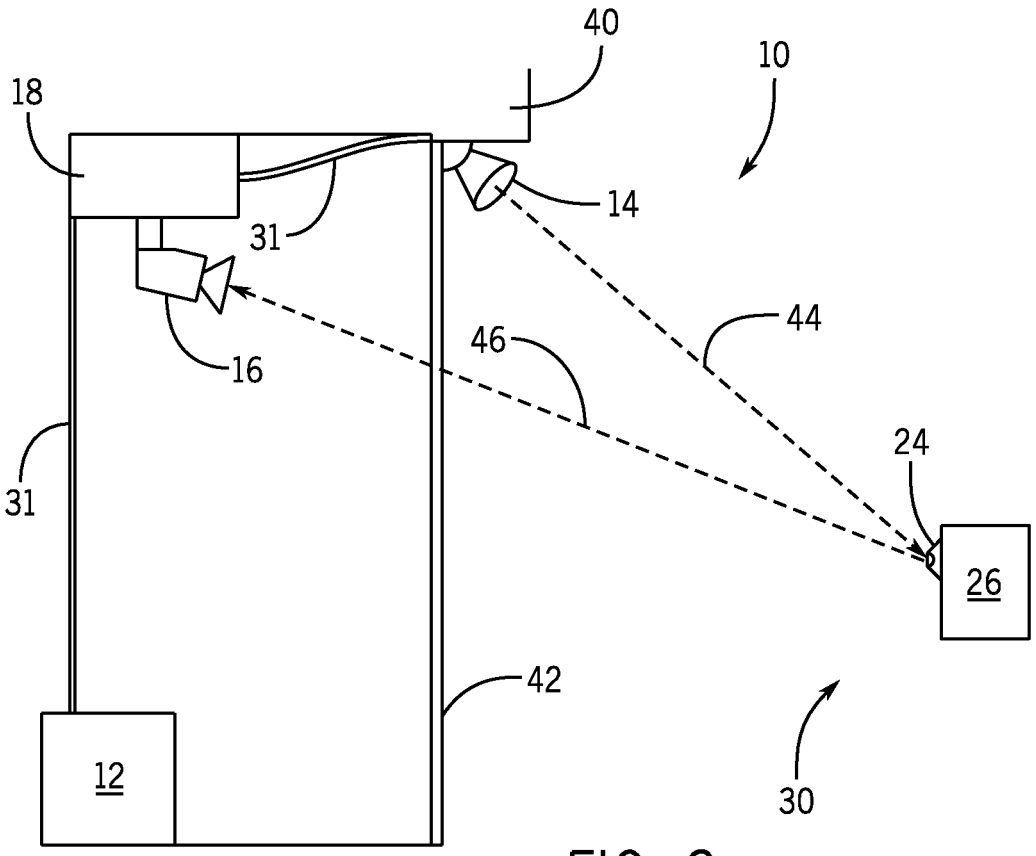
40
10
18
14
31
16
44
46
24
26
31
42
12
30

FIG. 2

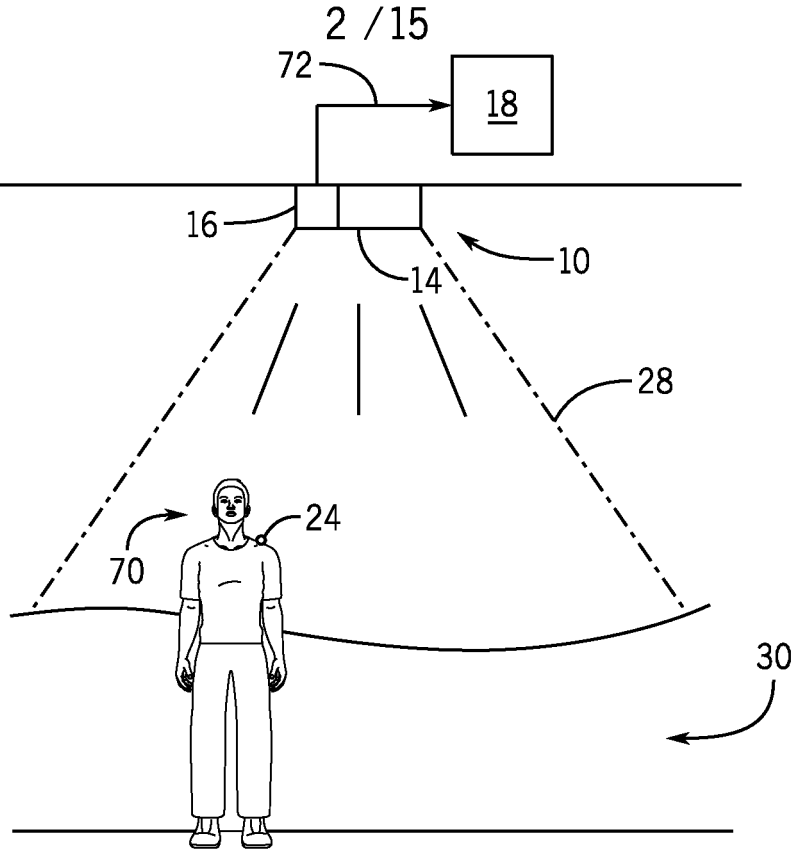

FIG. 3

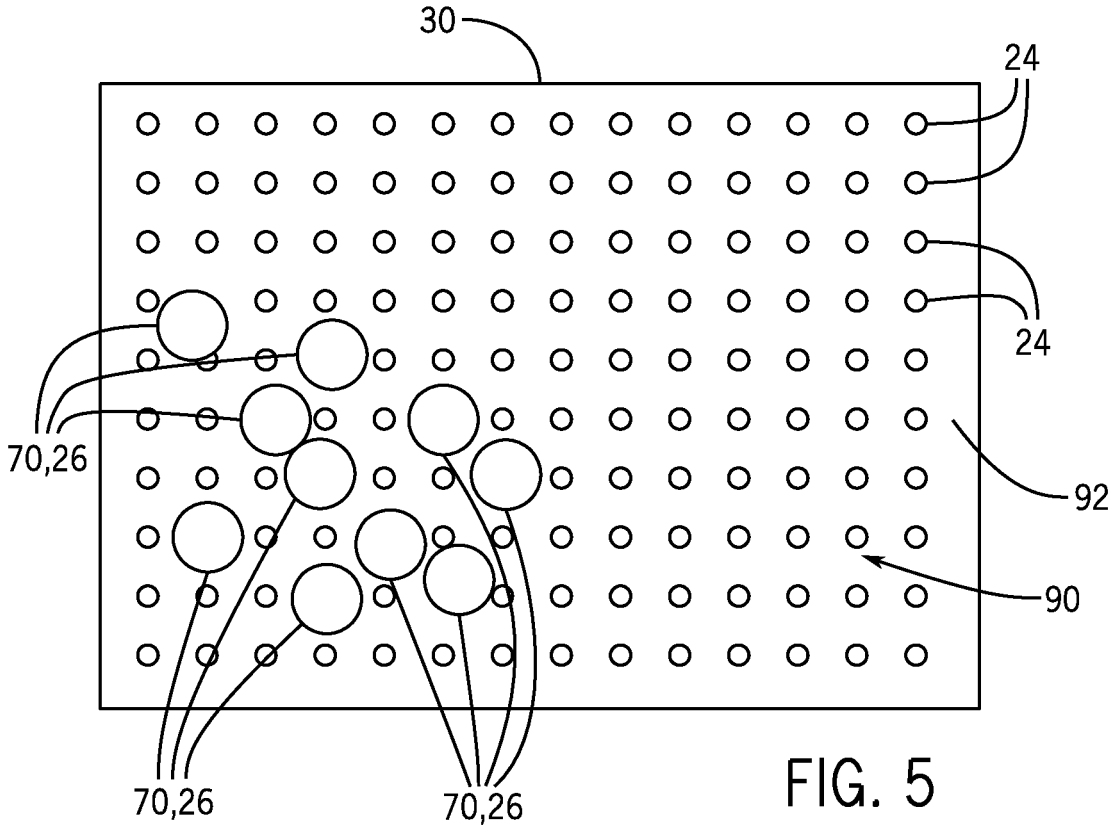

FIG. 5

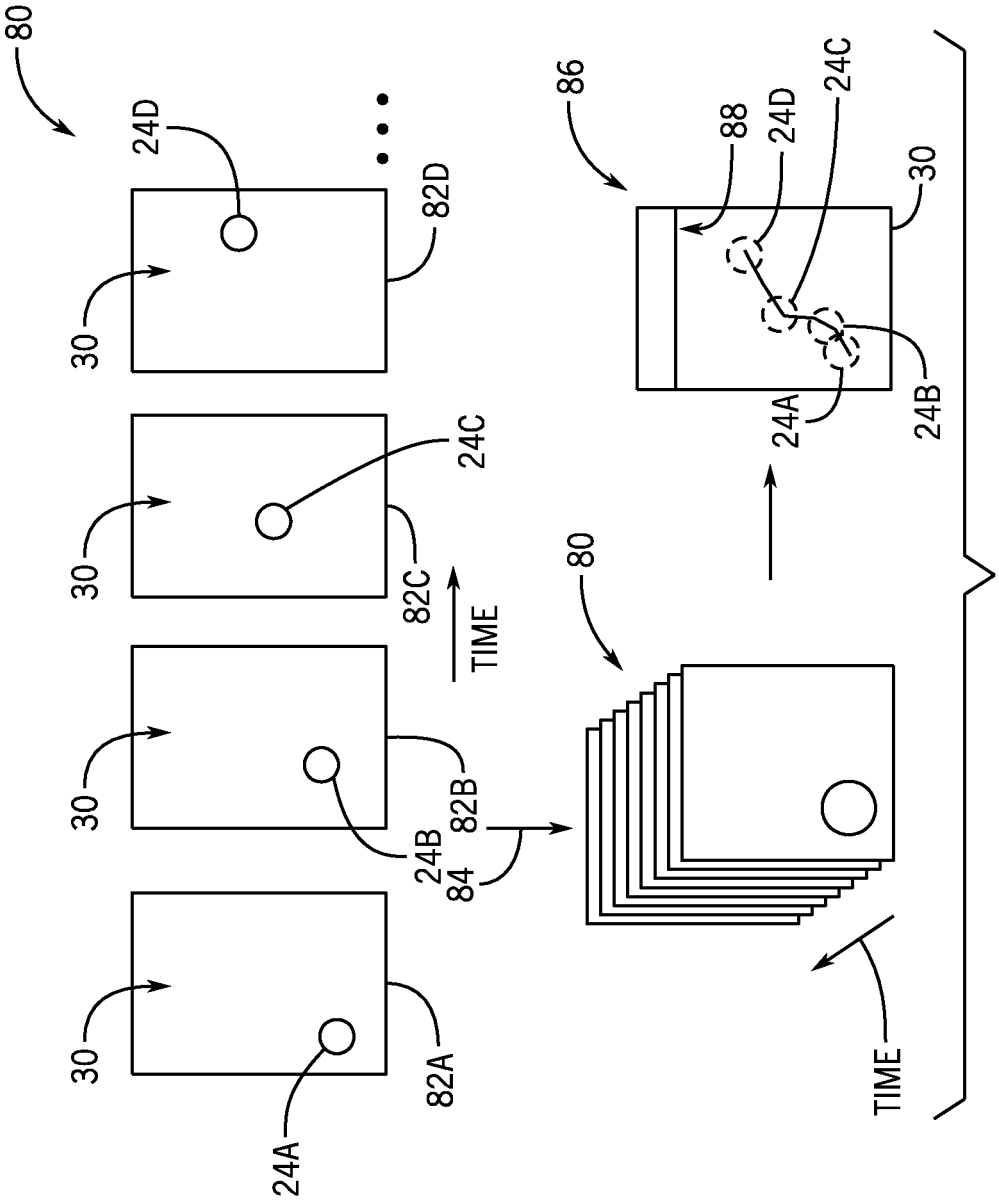

FIG. 4

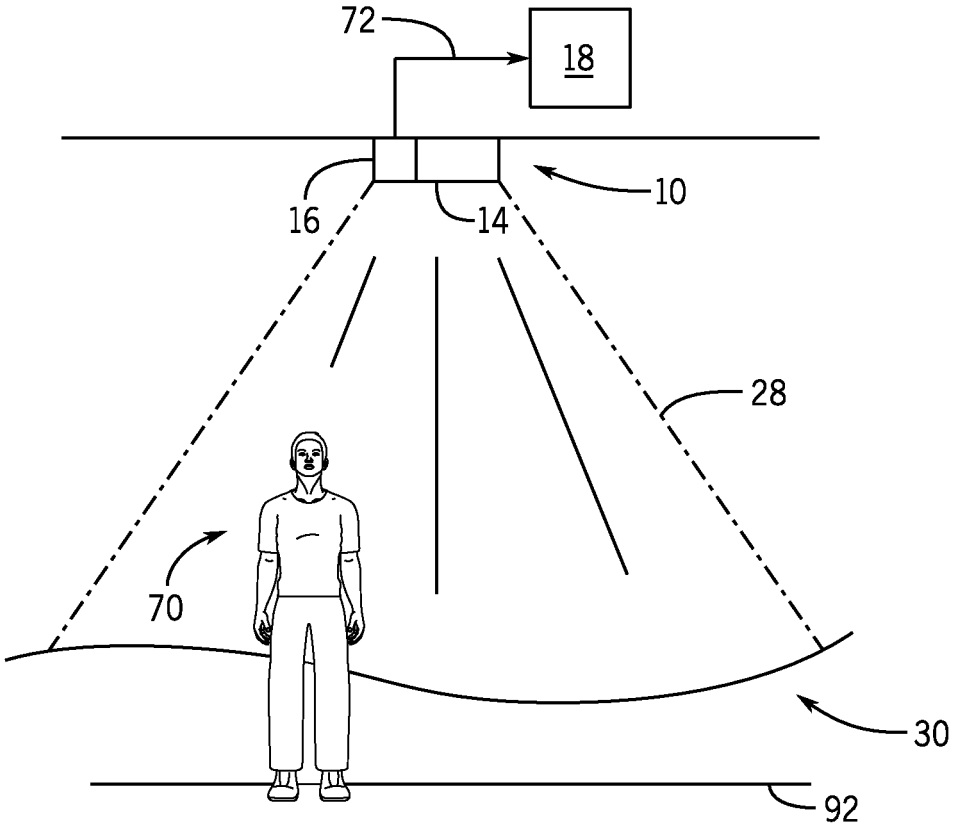

FIG. 6

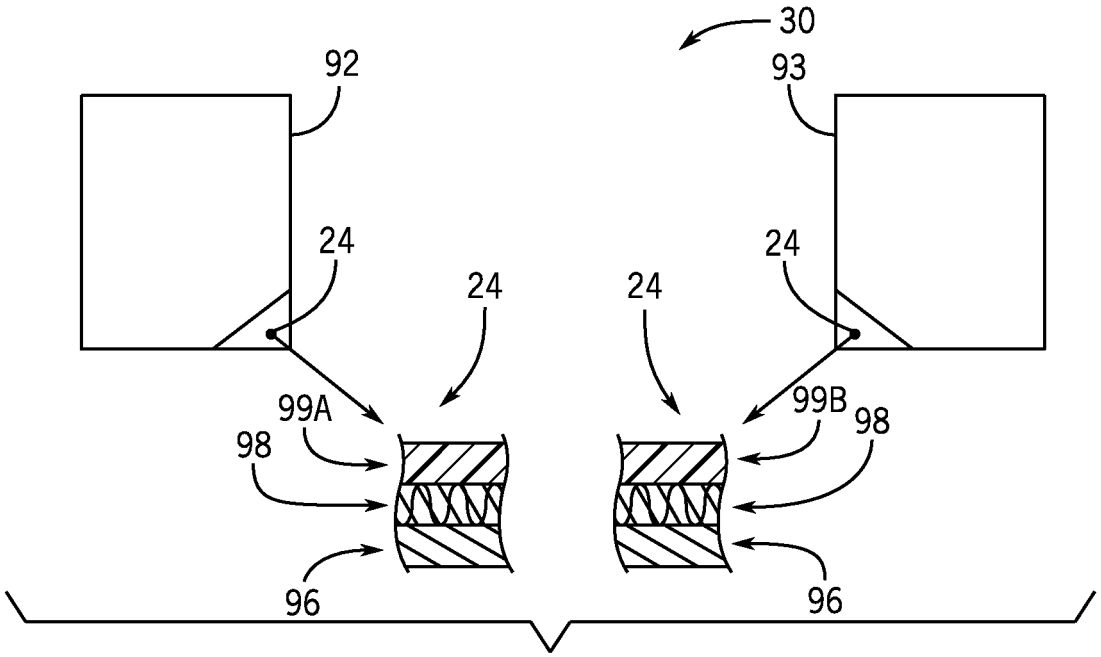

FIG. 8

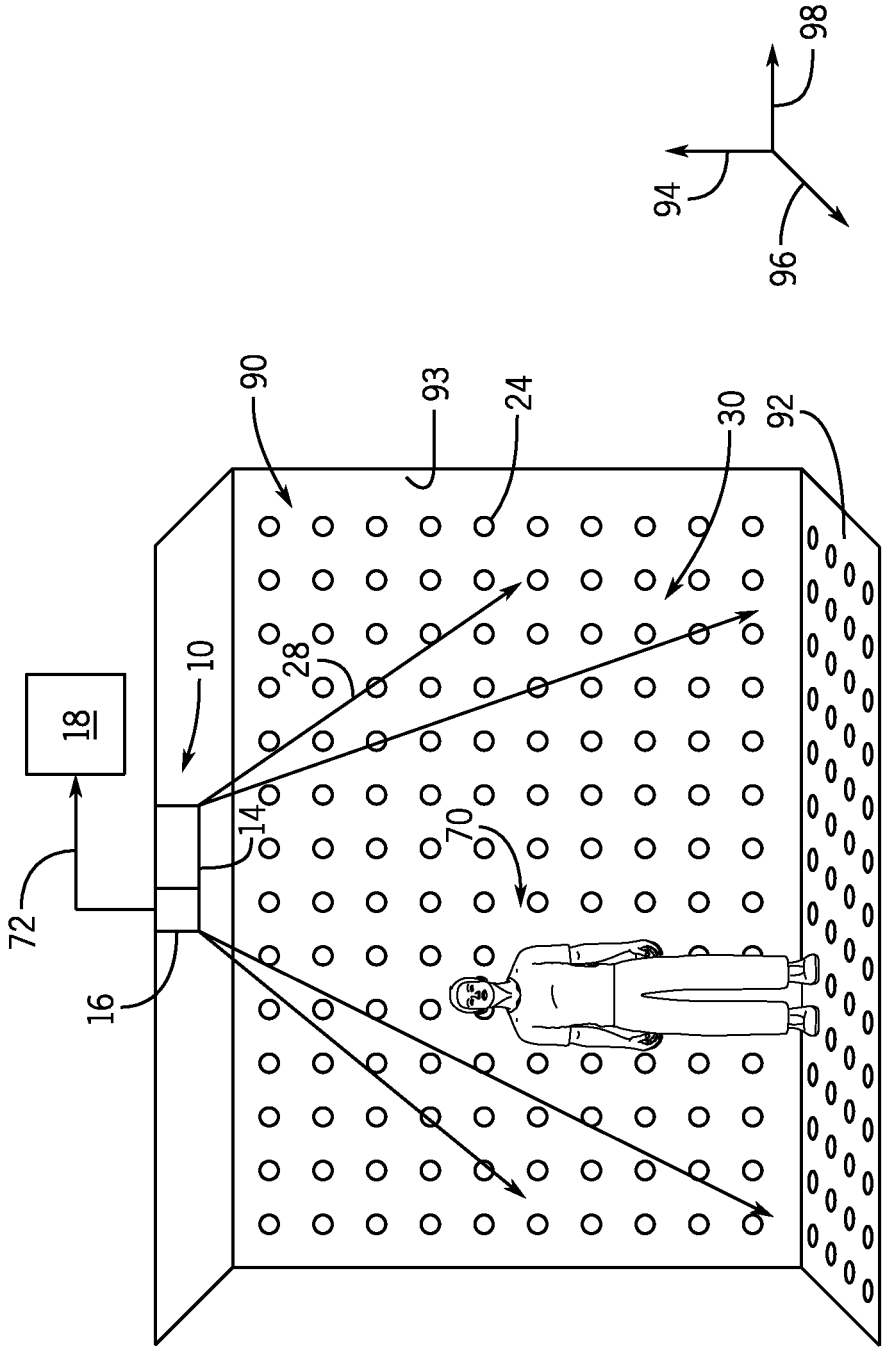

FIG. 7

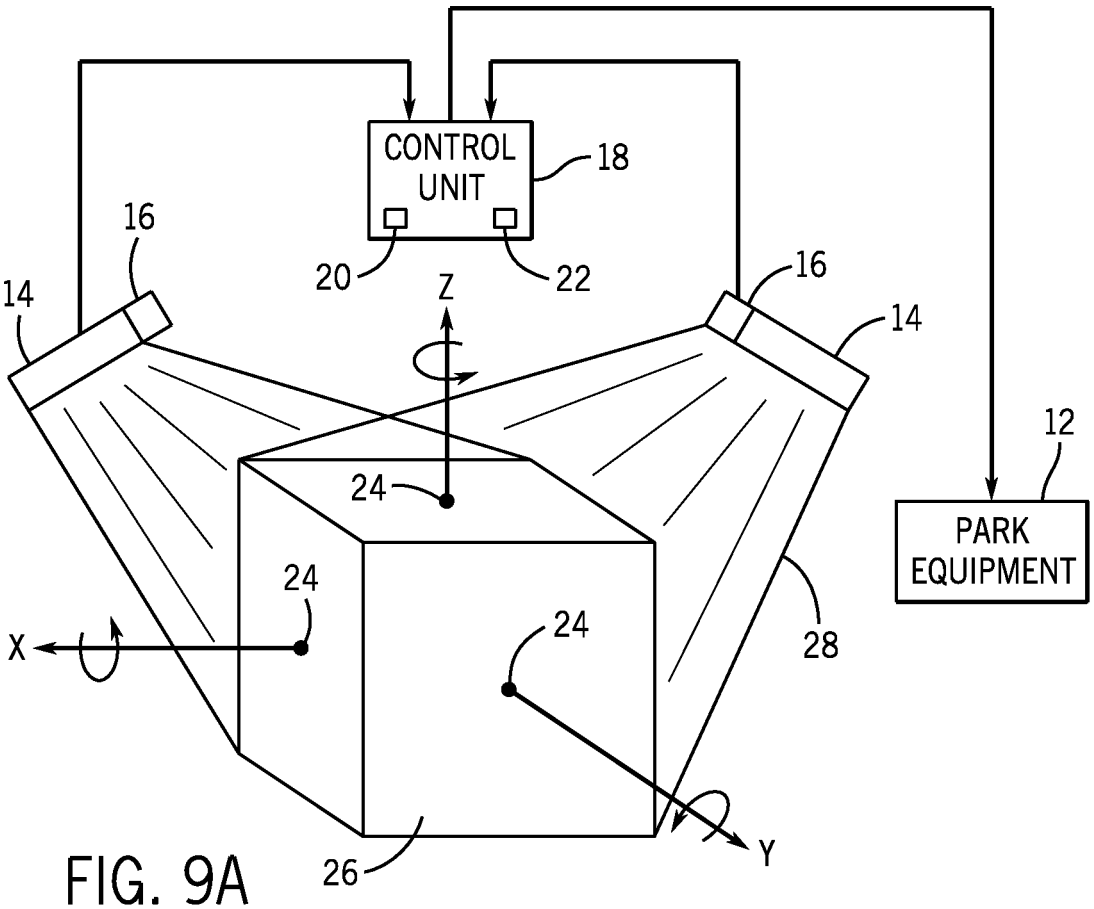

FIG. 9A

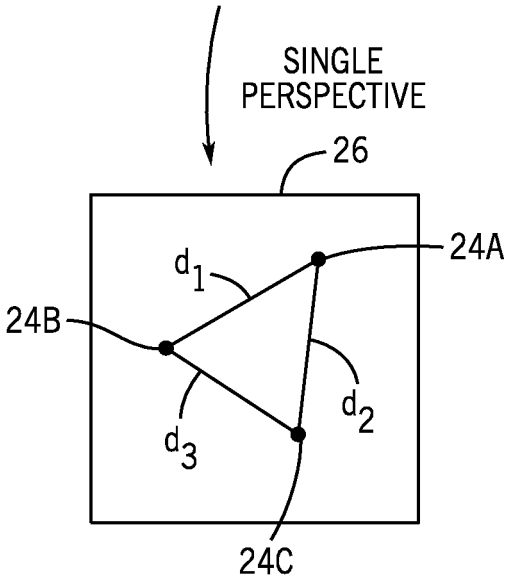

FIG. 9B

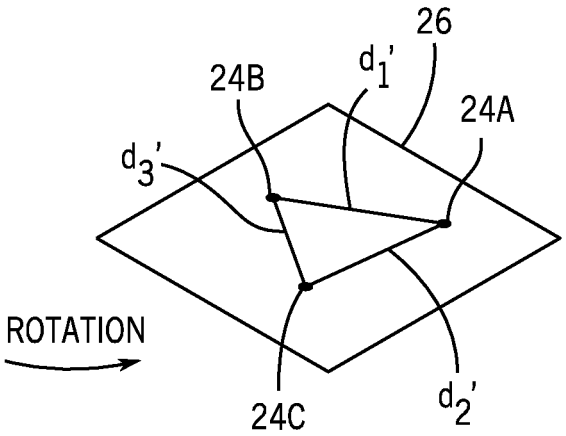

FIG. 9C

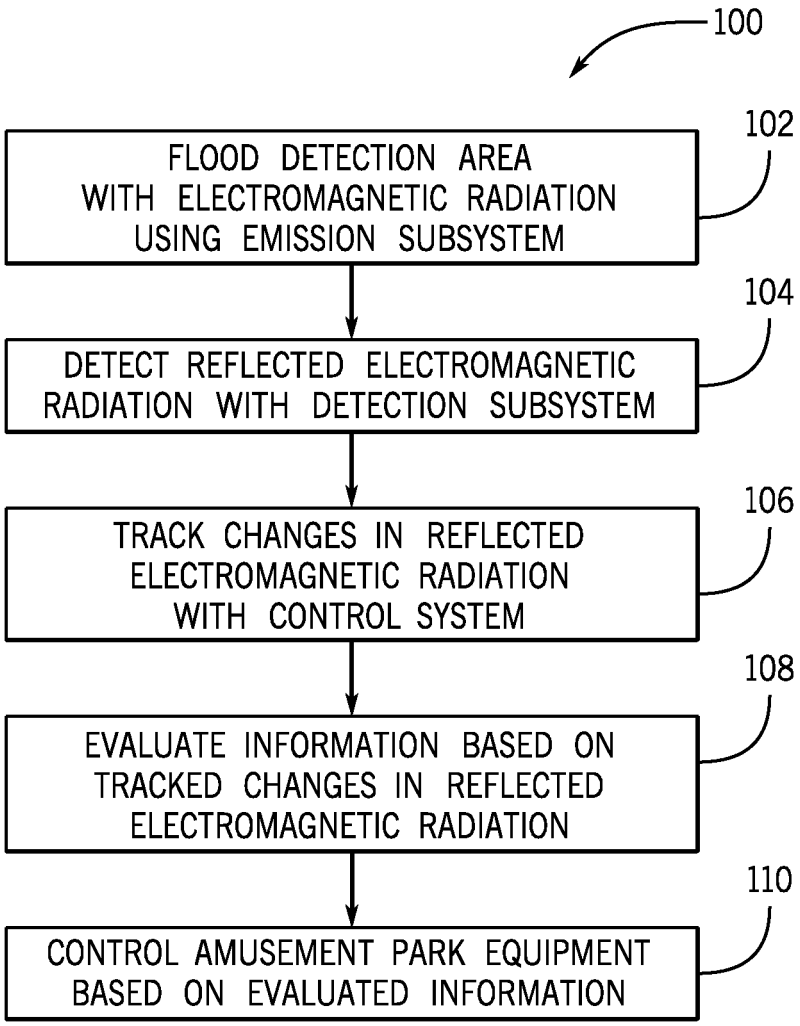
100
FLOOD DETECTION AREA WITH ELECTROMAGNETIC RADIATION USING EMISSION SUBSYSTEM
102
DETECT REFLECTED ELECTROMAGNETIC RADIATION WITH DETECTION SUBSYSTEM
104
TRACK CHANGES IN REFLECTED ELECTROMAGNETIC RADIATION WITH CONTROL SYSTEM
106
EVALUATE INFORMATION BASED ON TRACKED CHANGES IN REFLECTED ELECTROMAGNETIC RADIATION
108
CONTROL AMUSEMENT PARK EQUIPMENT BASED ON EVALUATED INFORMATION
110

FIG. 10

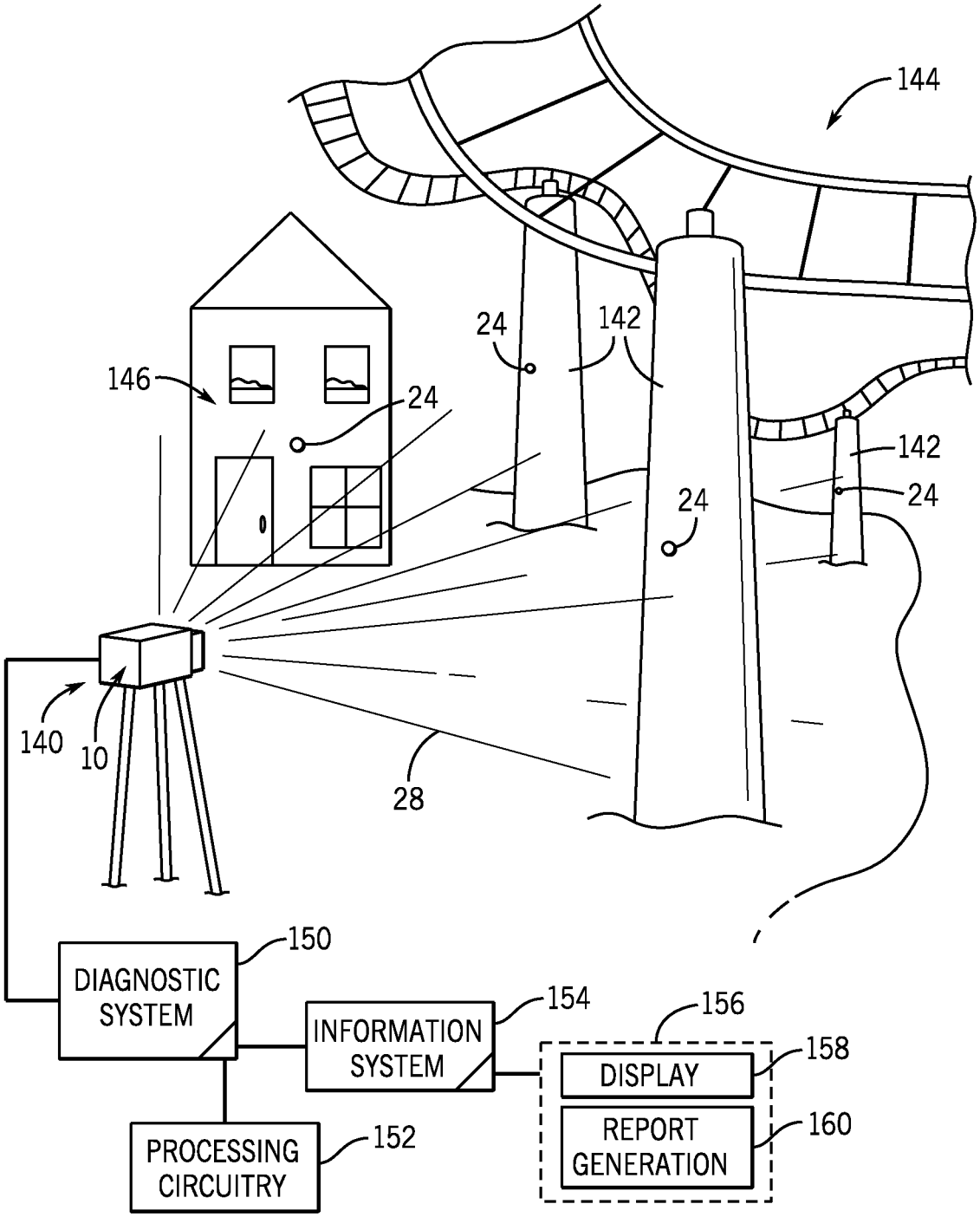
144
146
24
142
24
142
24
24
140
10
28
150
DIAGNOSTIC SYSTEM
154
INFORMATION SYSTEM
156
158
DISPLAY
160
REPORT GENERATION
152
PROCESSING CIRCUITRY

FIG. 11

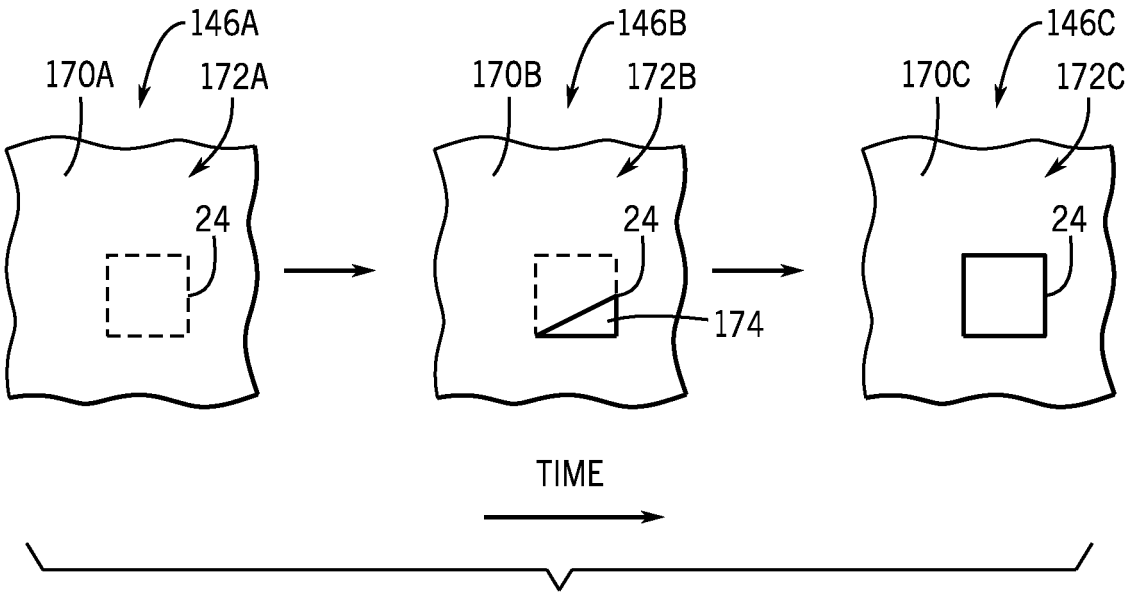

FIG. 12

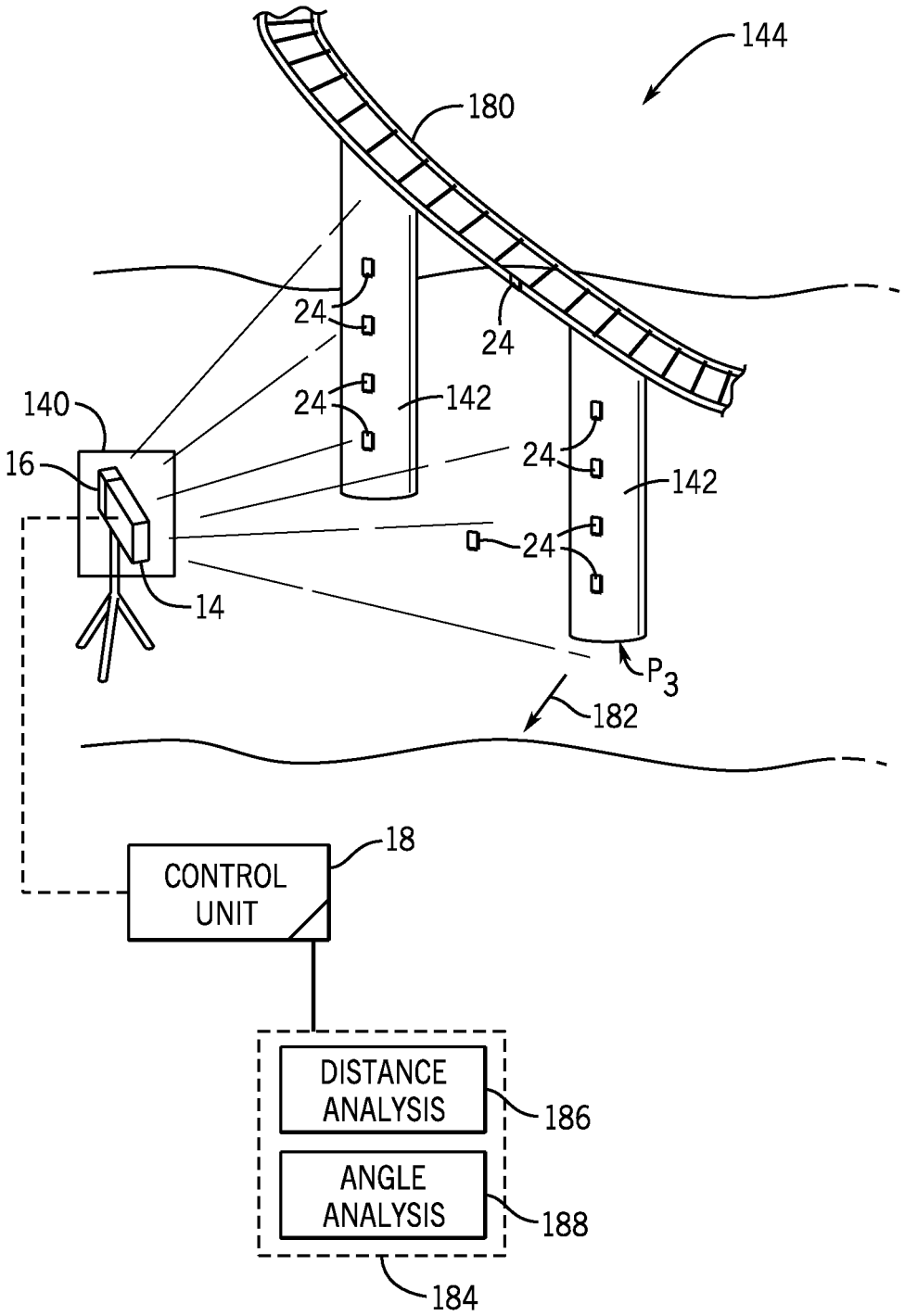
144
180
24
24
24
24
140
142
16
24
142
24
14
P_3
182
18
CONTROL UNIT
DISTANCE ANALYSIS
186
ANGLE ANALYSIS
188
184

FIG. 13

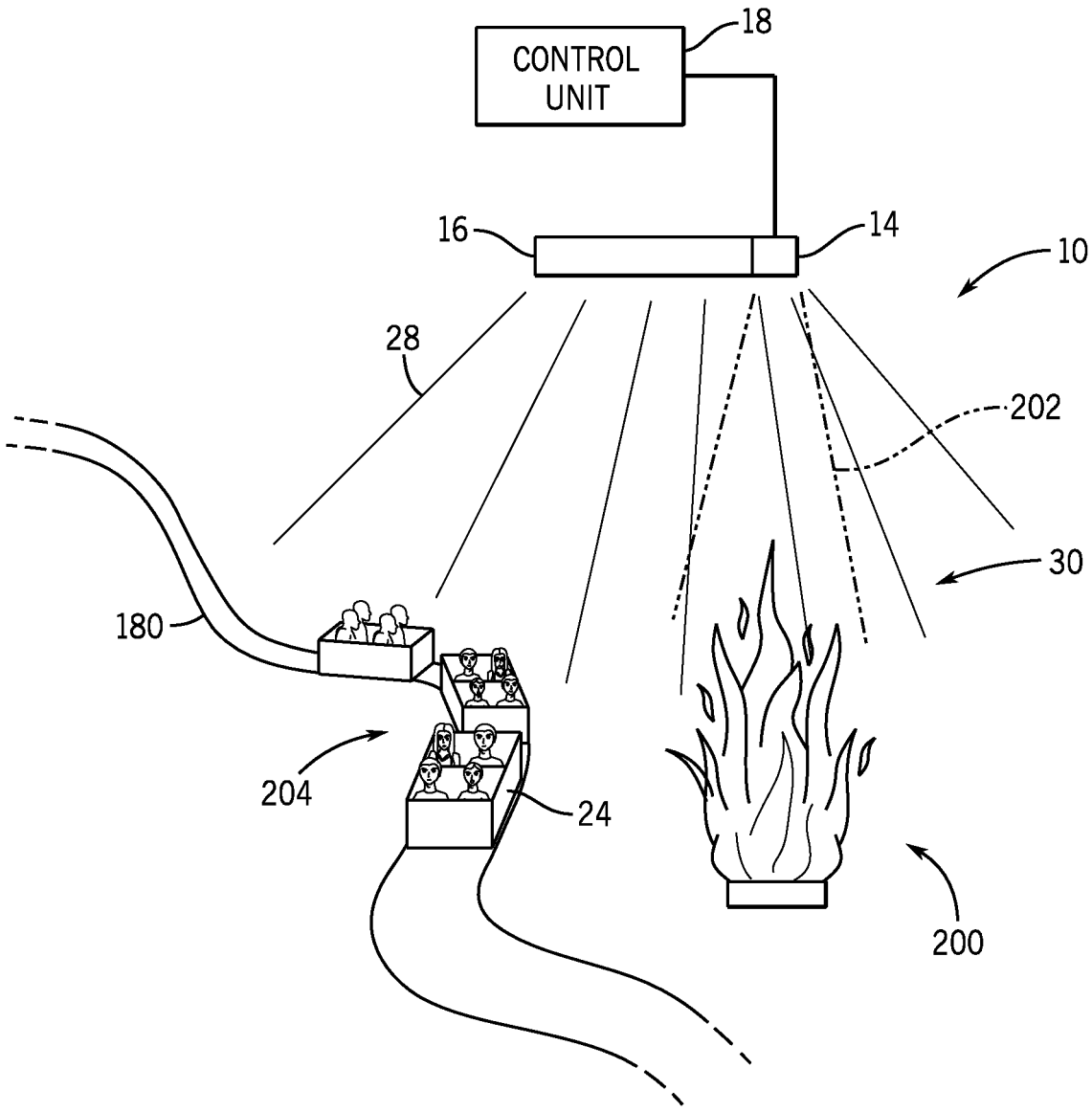

FIG. 14

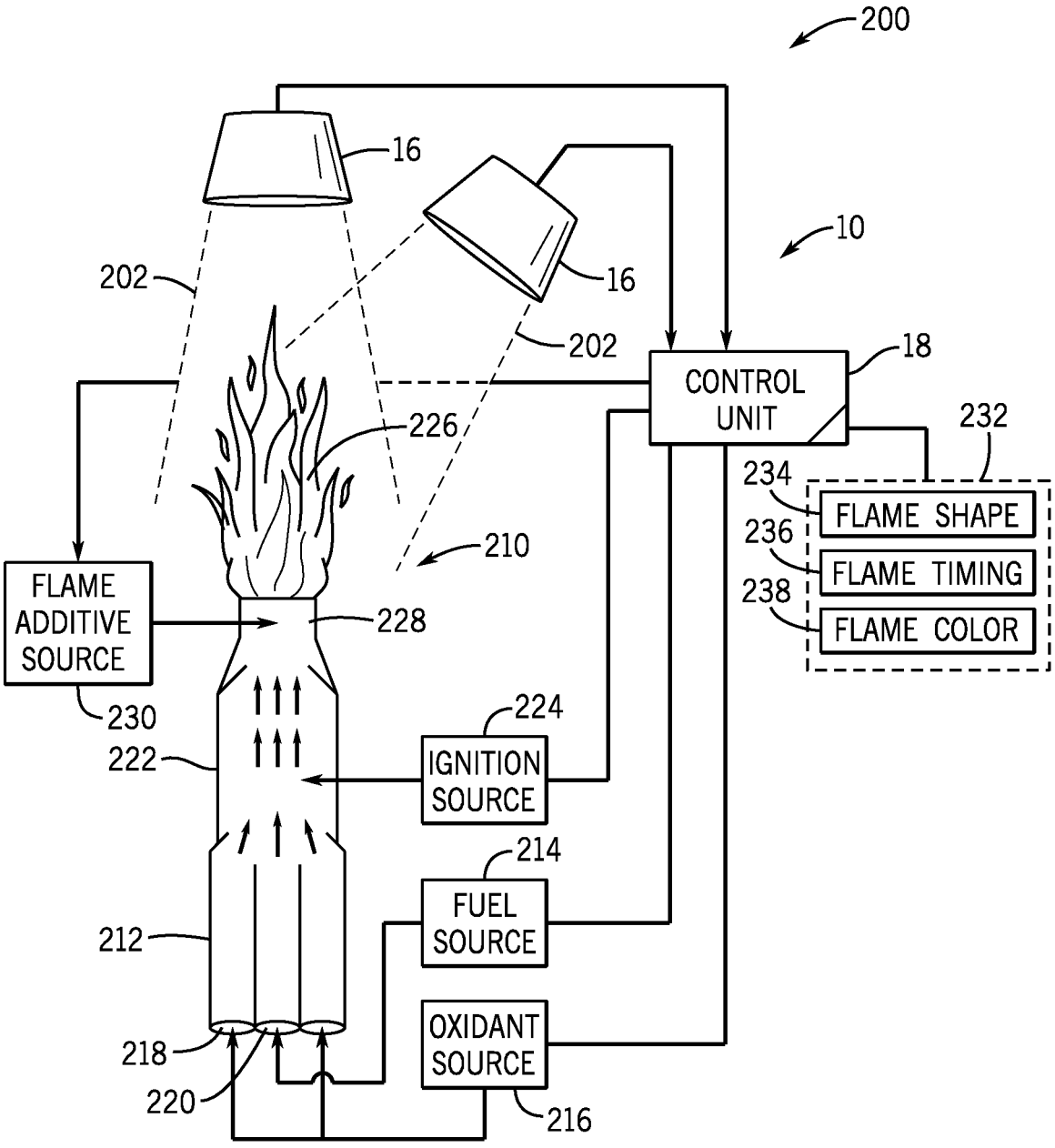
200
16
16
10
202
202
18
CONTROL UNIT
232
226
234
FLAME SHAPE
236
FLAME TIMING
238
FLAME COLOR
210
FLAME ADDITIVE SOURCE
228
230
224
222
IGNITION SOURCE
214
FUEL SOURCE
212
OXIDANT SOURCE
218
220
216

FIG. 15

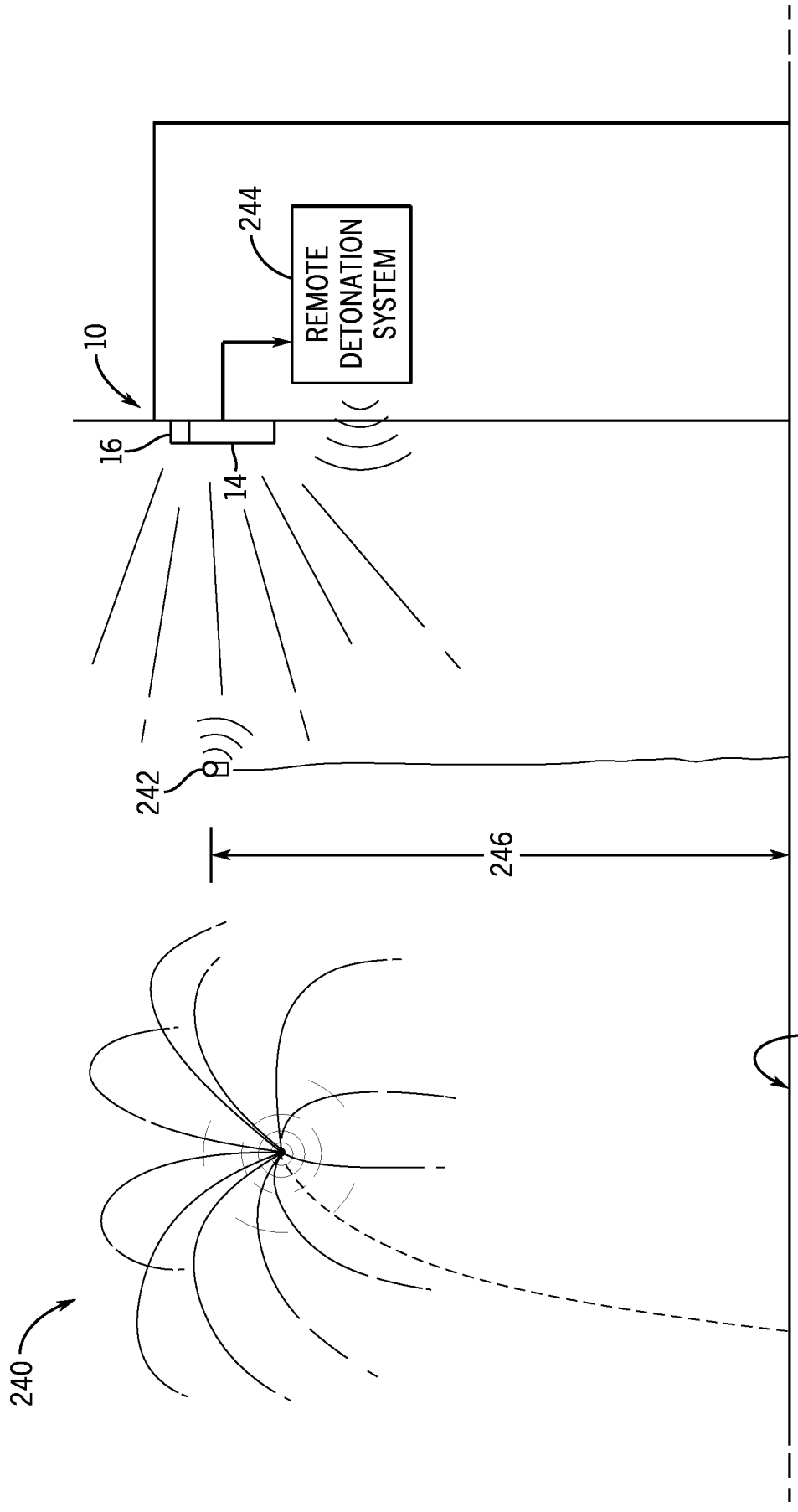

FIG. 16

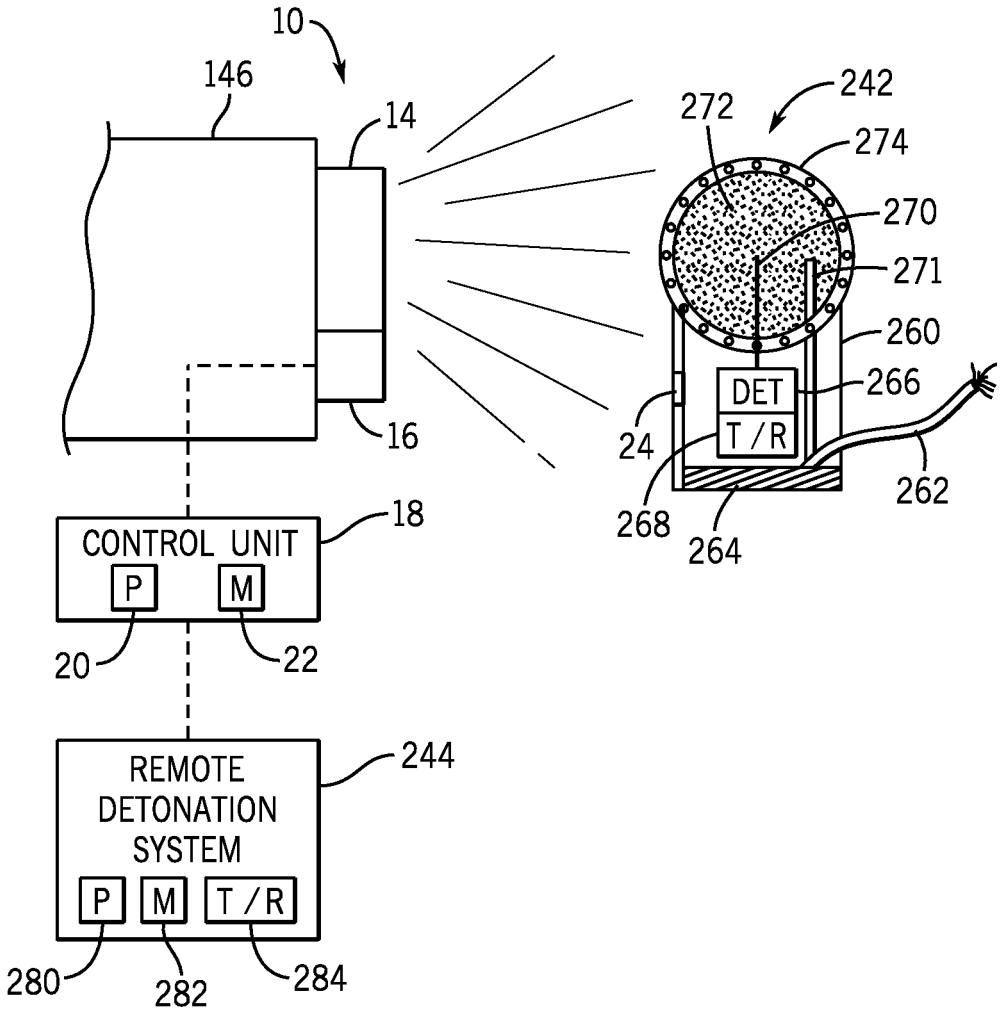
10
146
14
16
18
CONTROL UNIT
P
M
20
22
REMOTE
DETONATION
SYSTEM
P
M
T/R
280
282
284
244
242
272
274
270
271
260
DET
T/R
266
24
268
264
262

FIG. 17

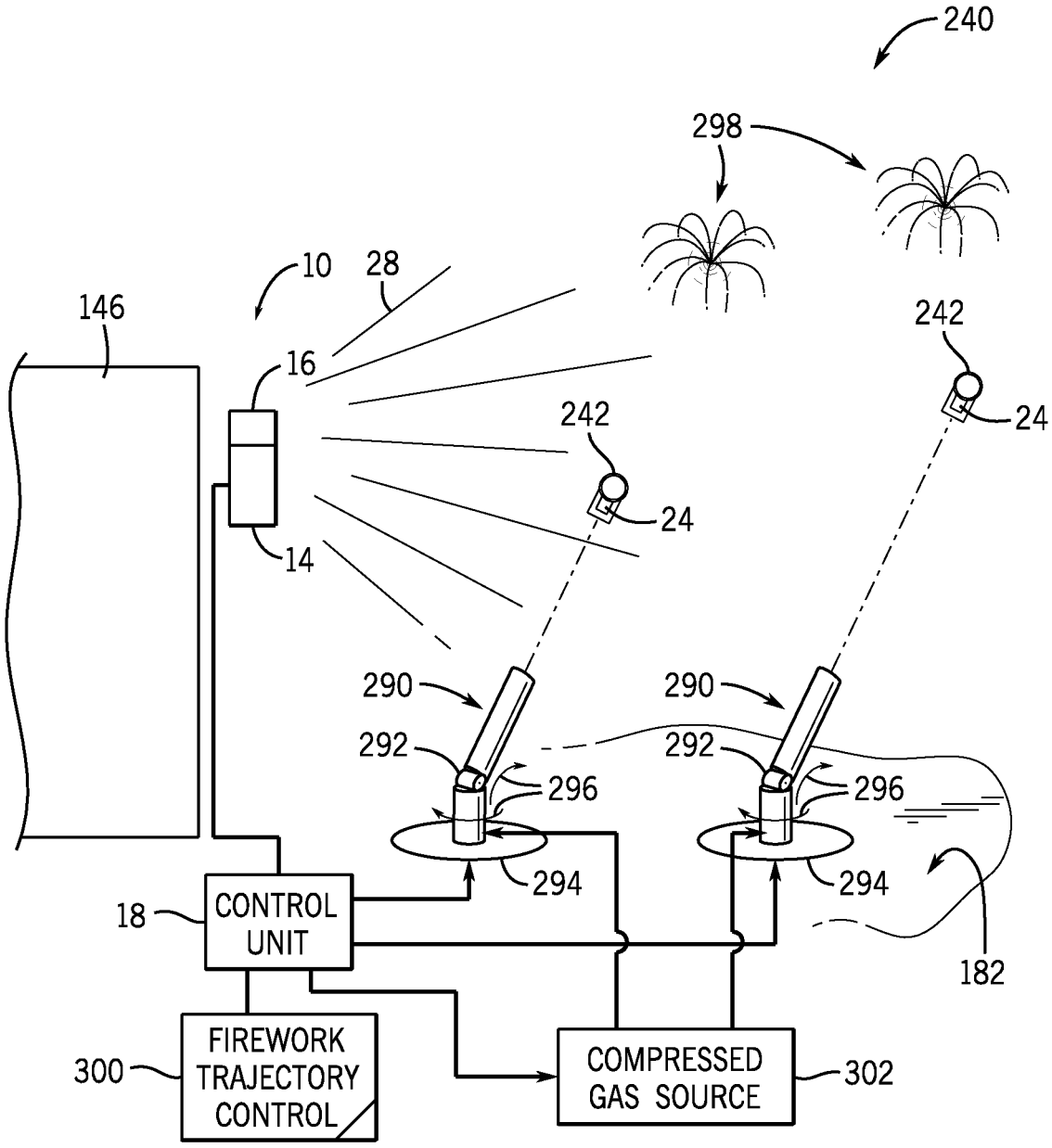
240
298
10
28
146
16
242
24
242
24
14
290
290
292
292
296
296
294
294
18
CONTROL UNIT
182
FIREWORK TRAJECTORY CONTROL
300
COMPRESSED GAS SOURCE
302

FIG. 18