FIG.1

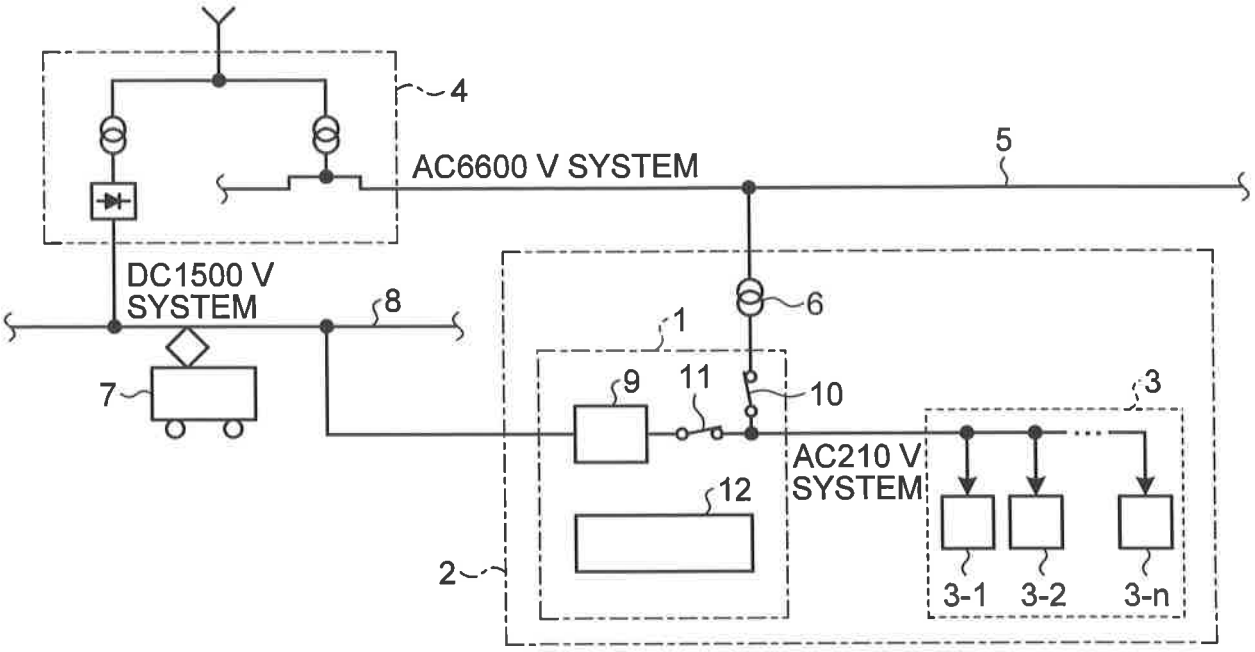
4
AC6600 V SYSTEM
5
DC1500 V
SYSTEM
8
6
1
7
9
11
10
3
AC210 V
SYSTEM
12
2
3-1
3-2
3-n

# FIG.2

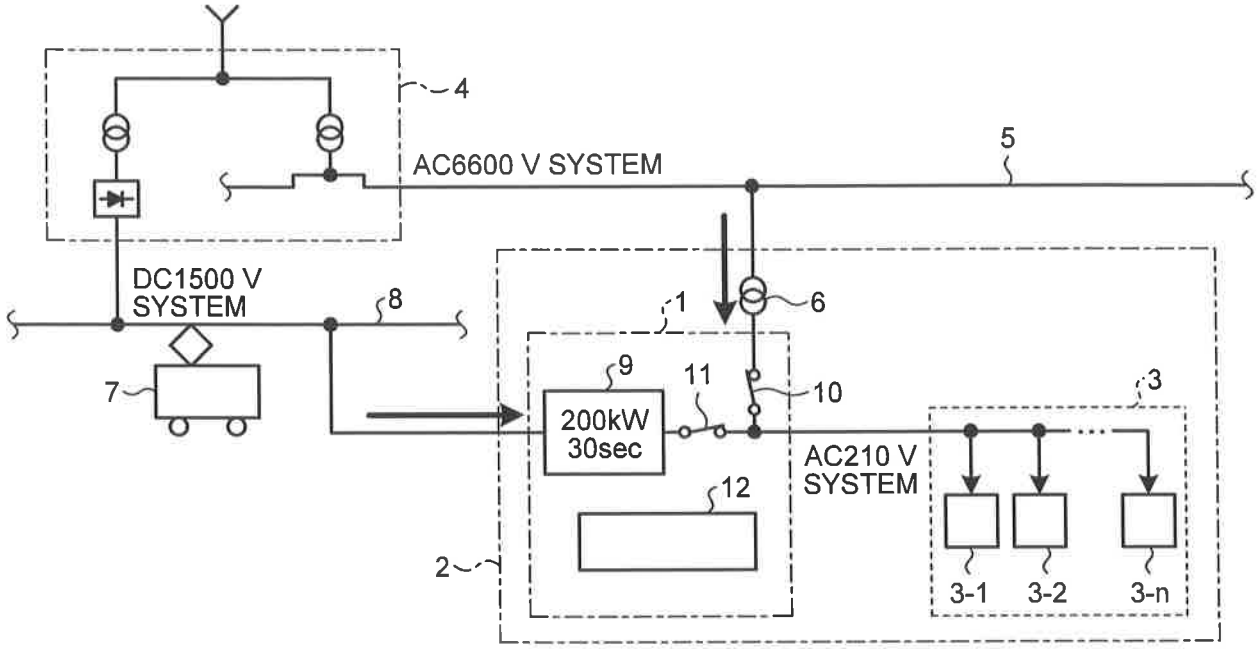


(a) REGENERATIVE MODE

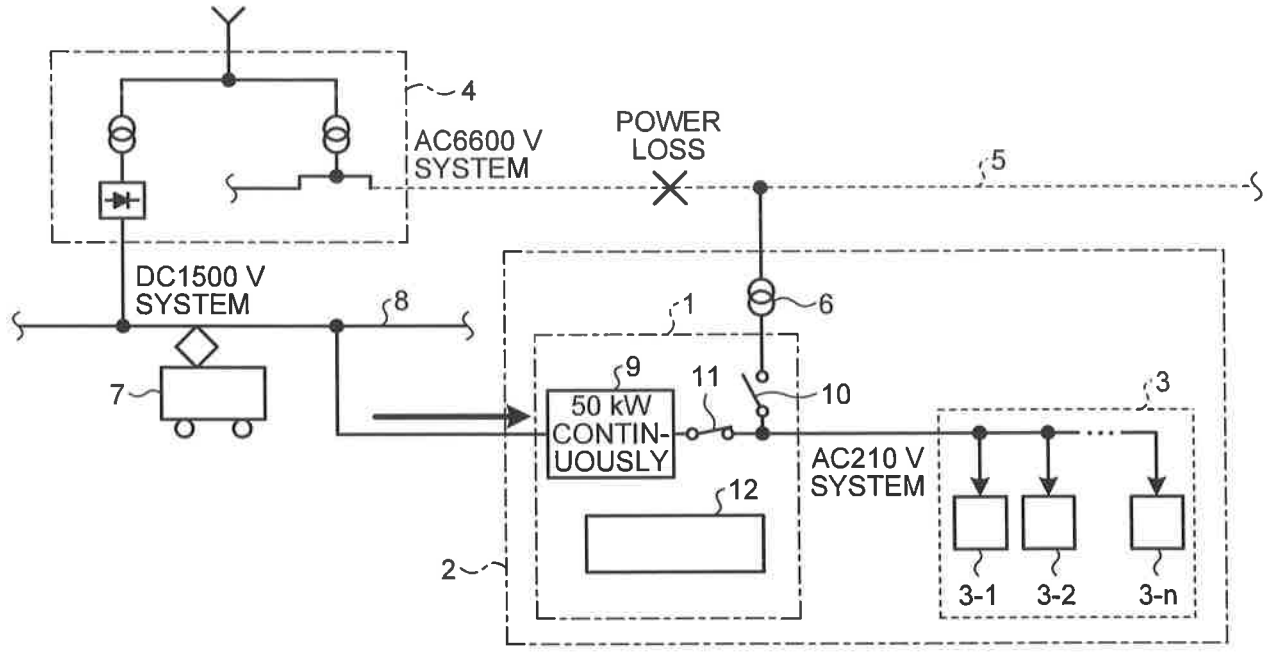


(b) STANDBY POWER SUPPLY MODE

FIG.3

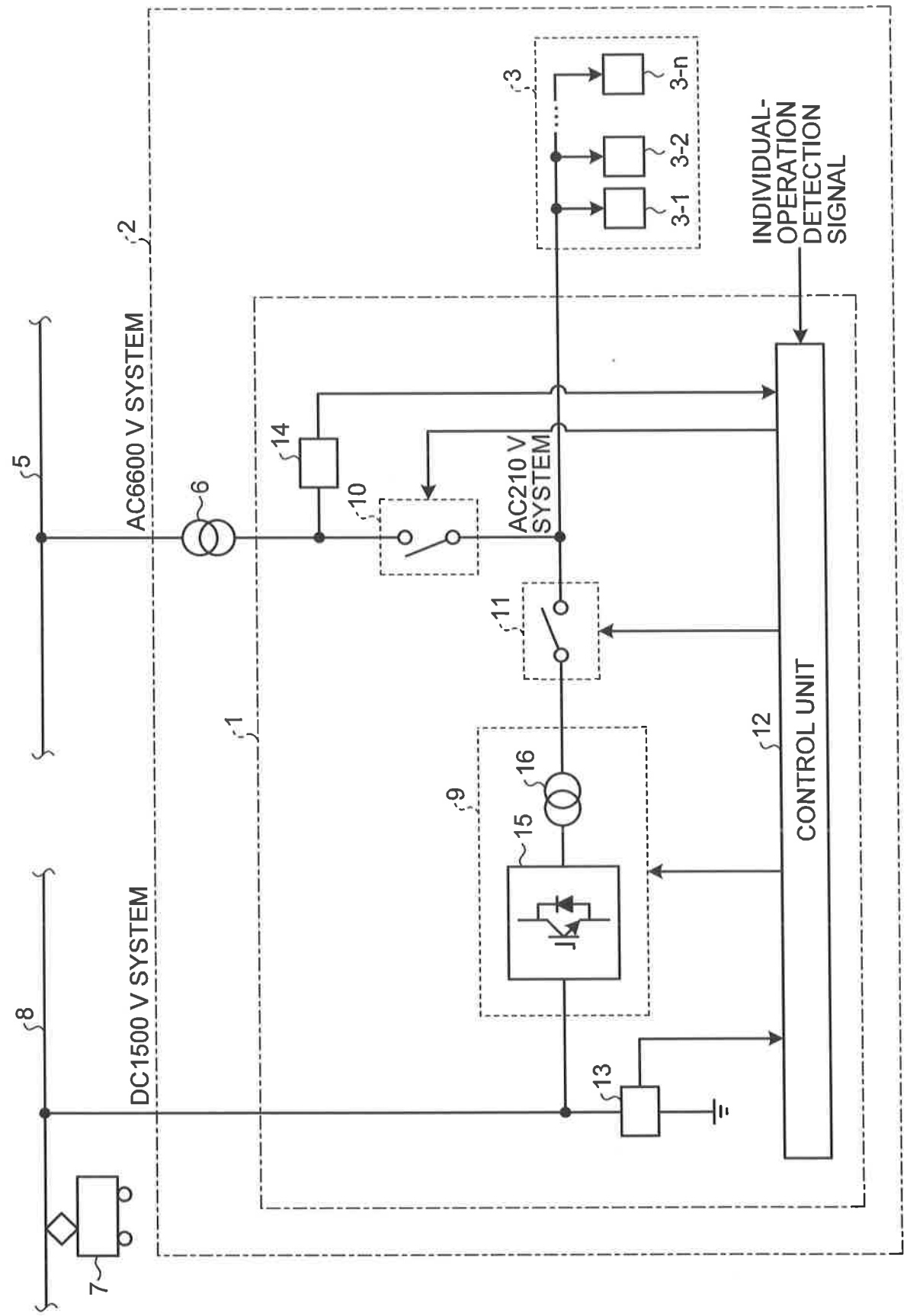
AC6600 V SYSTEM
AC210 V SYSTEM
DC1500 V SYSTEM
CONTROL UNIT
INDIVIDUAL-OPERATION DETECTION SIGNAL
1
2
3
3-1
3-2
3-n
5
6
7
8
9
10
11
12
13
14
15
16

FIG.4

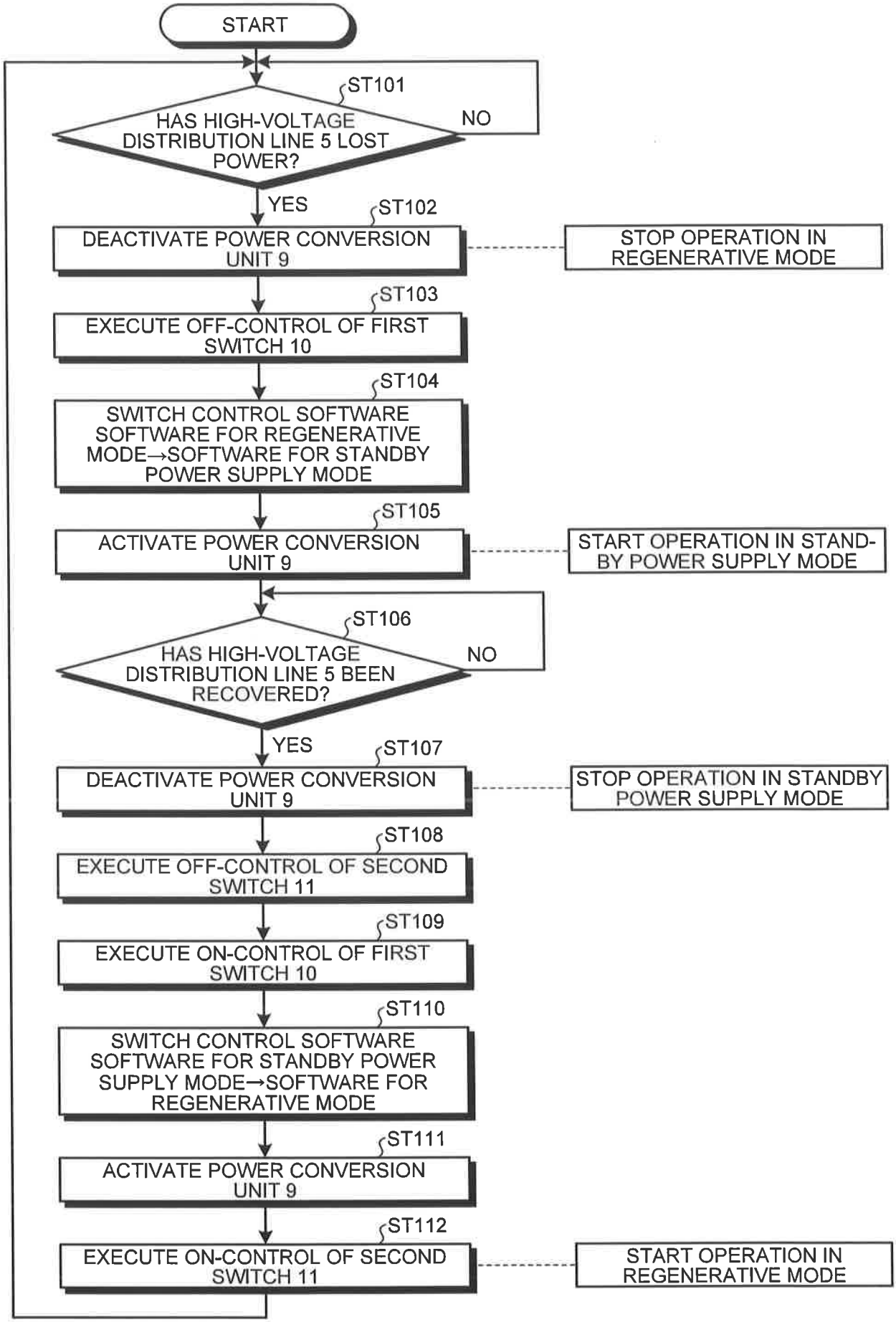
START
ST101
HAS HIGH-VOLTAGE DISTRIBUTION LINE 5 LOST POWER?
NO
YES
ST102
DEACTIVATE POWER CONVERSION UNIT 9
STOP OPERATION IN REGENERATIVE MODE
ST103
EXECUTE OFF-CONTROL OF FIRST SWITCH 10
ST104
SWITCH CONTROL SOFTWARE SOFTWARE FOR REGENERATIVE MODE→SOFTWARE FOR STANDBY POWER SUPPLY MODE
ST105
ACTIVATE POWER CONVERSION UNIT 9
START OPERATION IN STAND-BY POWER SUPPLY MODE
ST106
HAS HIGH-VOLTAGE DISTRIBUTION LINE 5 BEEN RECOVERED?
NO
YES
ST107
DEACTIVATE POWER CONVERSION UNIT 9
STOP OPERATION IN STANDBY POWER SUPPLY MODE
ST108
EXECUTE OFF-CONTROL OF SECOND SWITCH 11
ST109
EXECUTE ON-CONTROL OF FIRST SWITCH 10
ST110
SWITCH CONTROL SOFTWARE SOFTWARE FOR STANDBY POWER SUPPLY MODE→SOFTWARE FOR REGENERATIVE MODE
ST111
ACTIVATE POWER CONVERSION UNIT 9
ST112
EXECUTE ON-CONTROL OF SECOND SWITCH 11
START OPERATION IN REGENERATIVE MODE