FIG.1

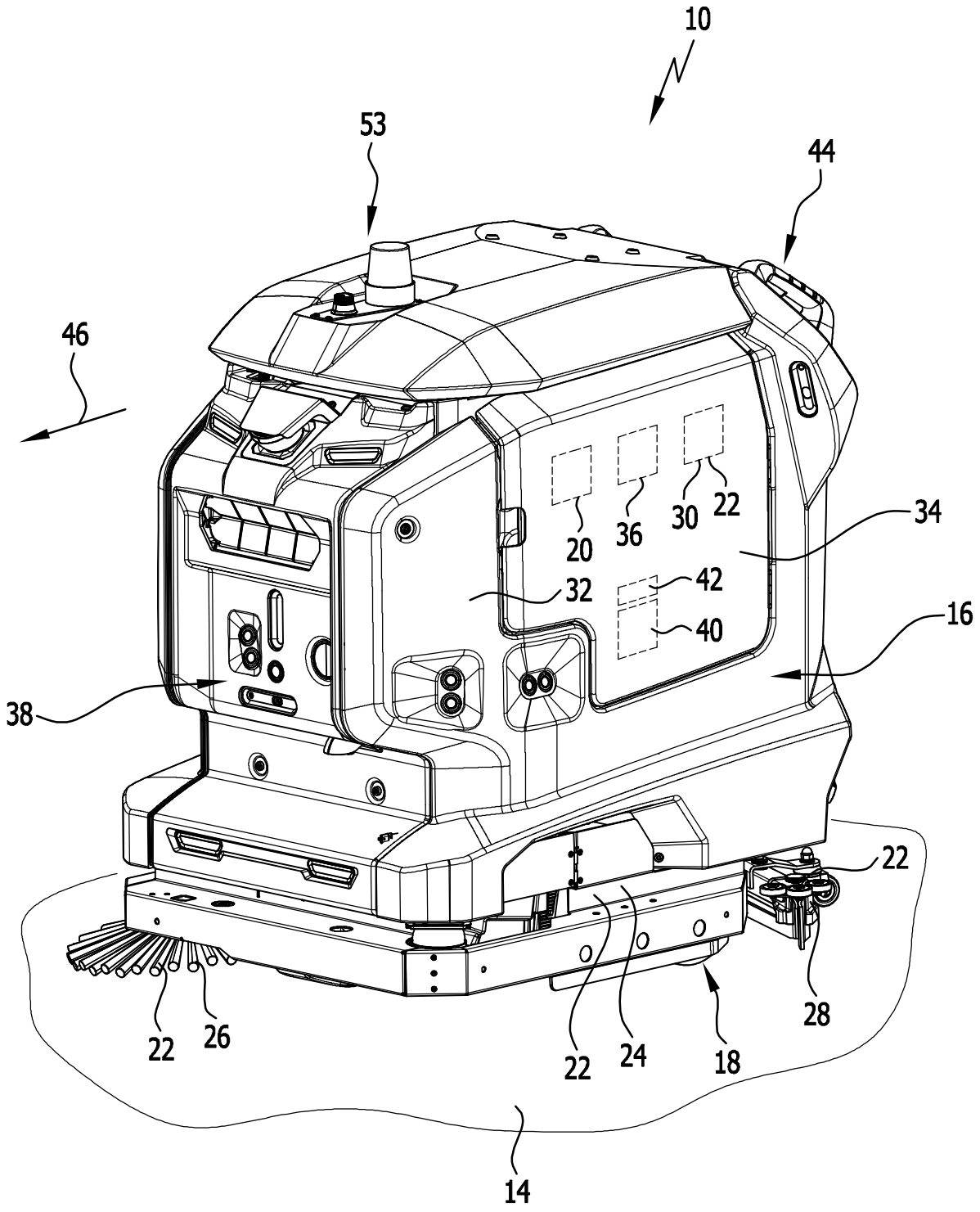

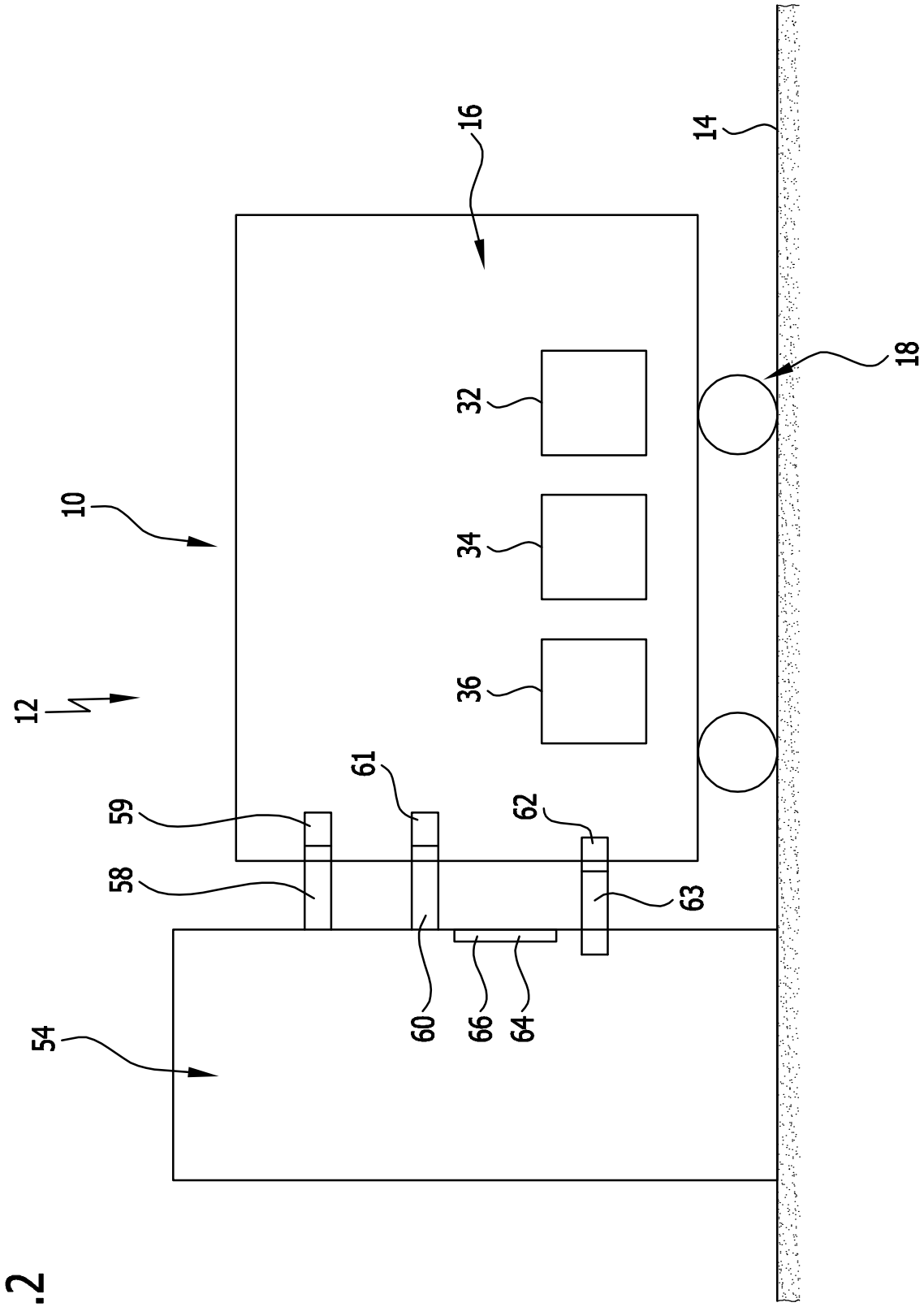

FIG.2

FIG.3A

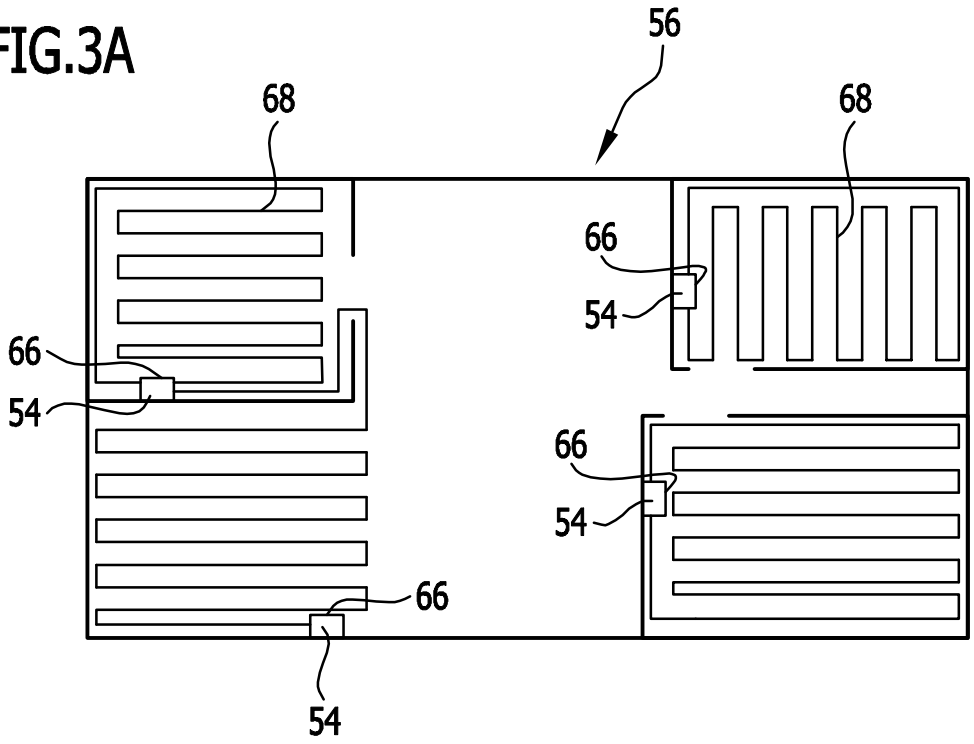

FIG.3B

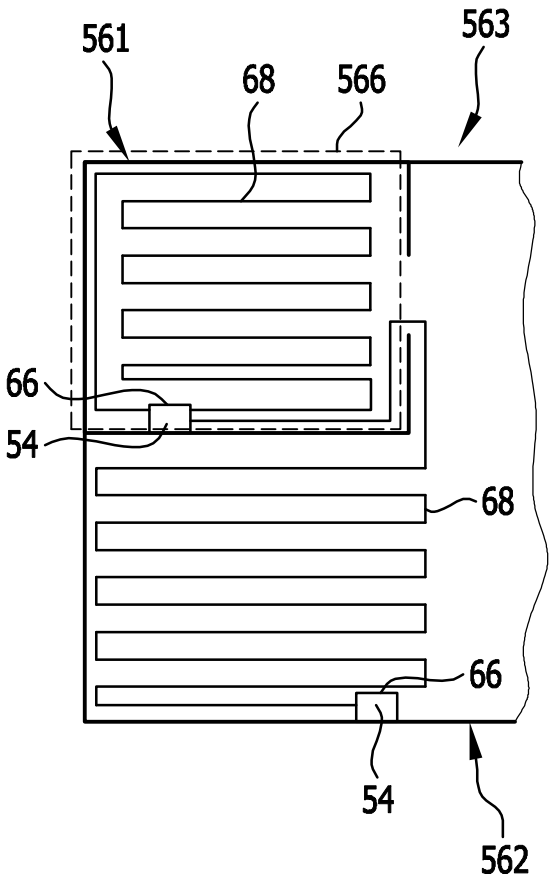

FIG.3C

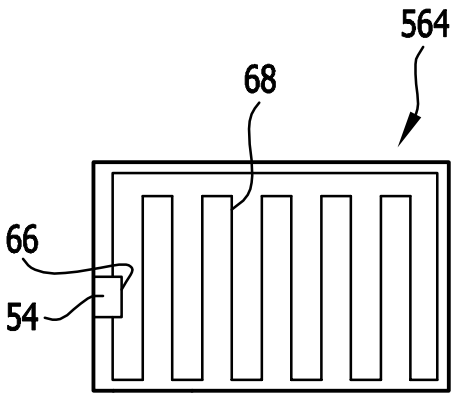

FIG.3D

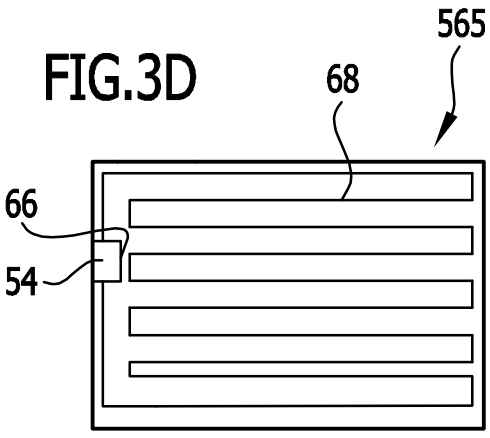

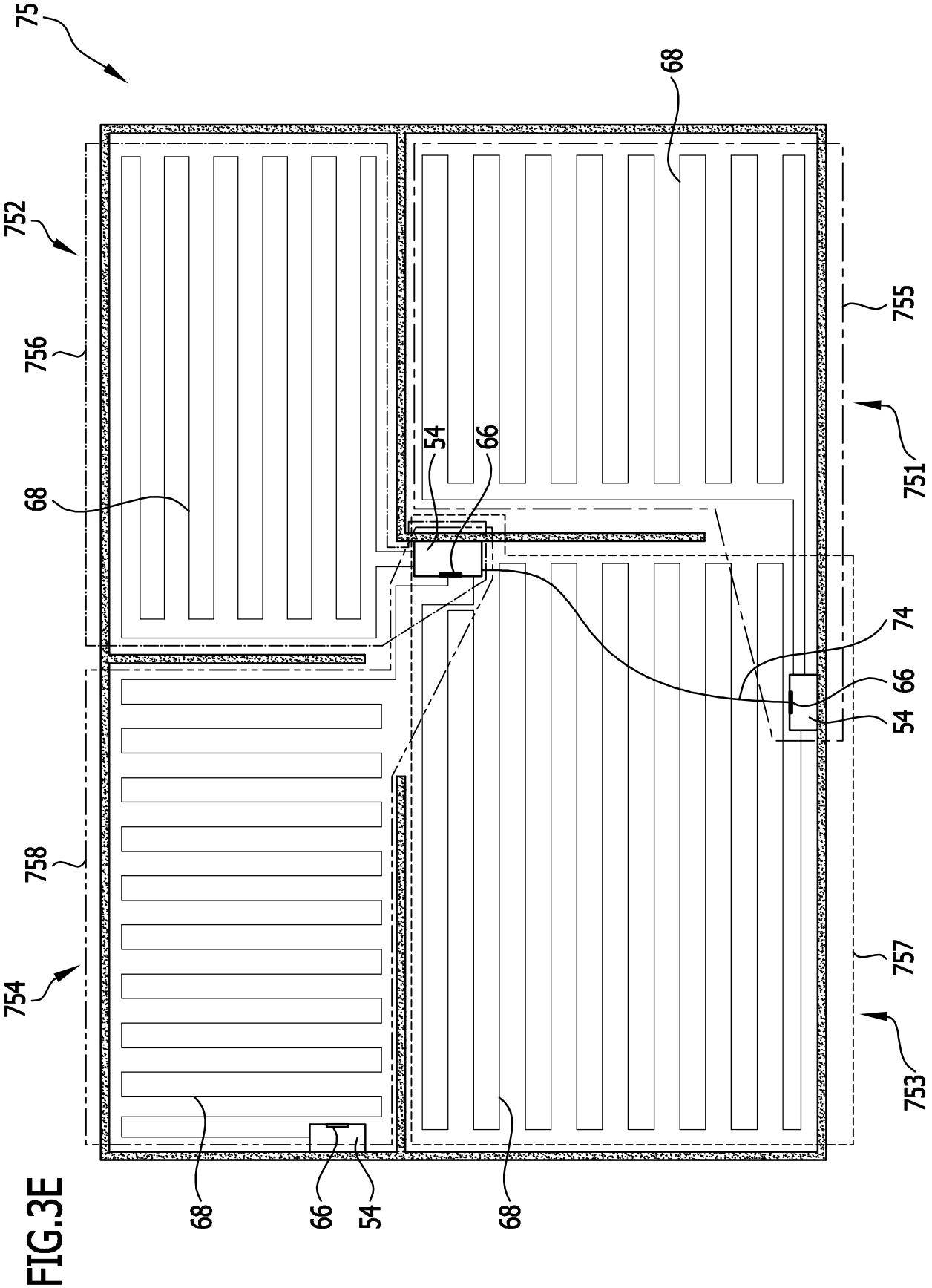

FIG.3E

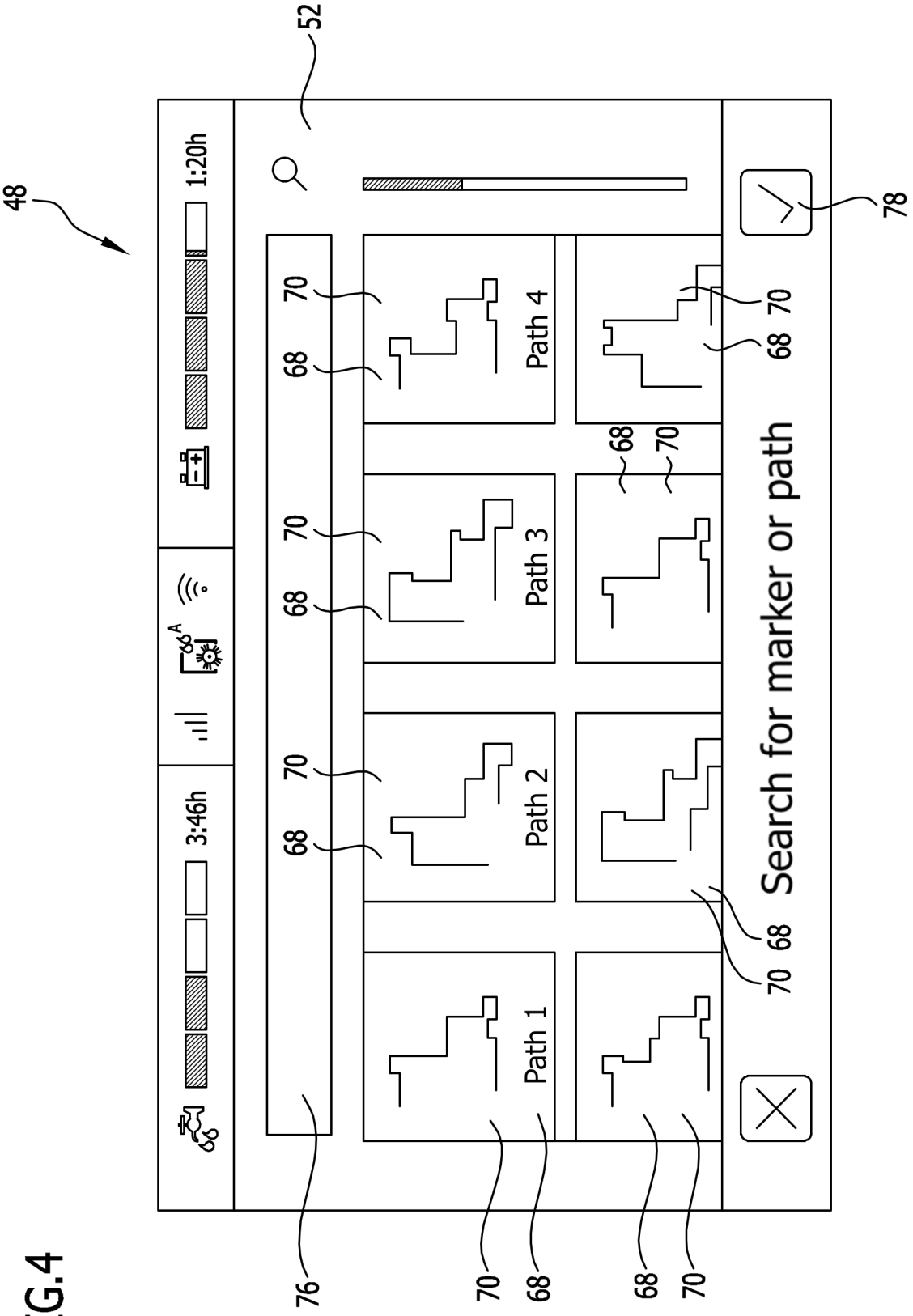
48
52
78
1:20h
3:46h
Search for marker or path
Path 1
Path 2
Path 3
Path 4
70
68
76

FIG.4

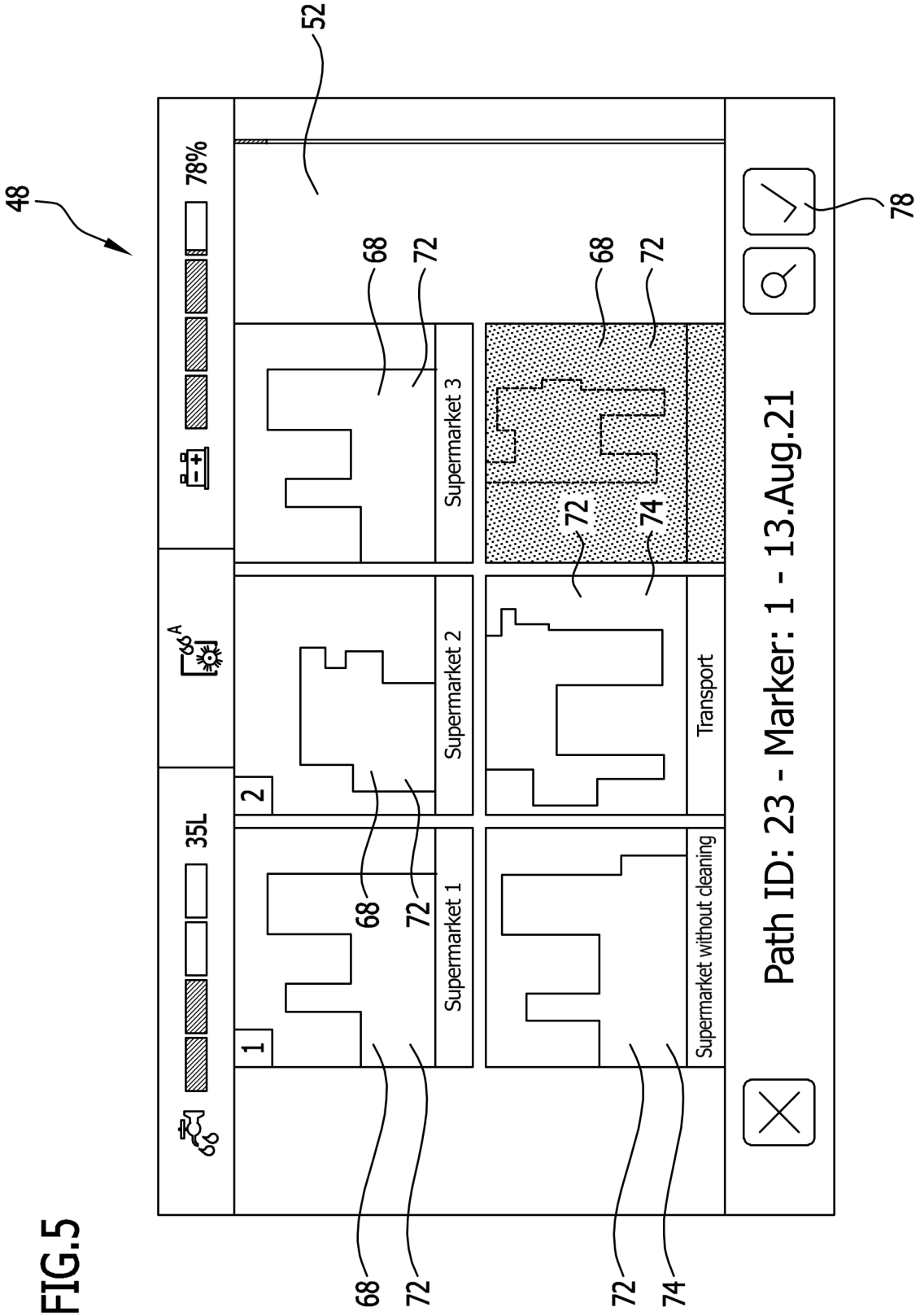
48
52
78%
35L
1
2
Supermarket 1
Supermarket 2
Supermarket 3
Transport
Supermarket without cleaning
68
72
74
Path ID: 23 - Marker: 1 - 13.Aug.21
78

FIG.5

FIG.6

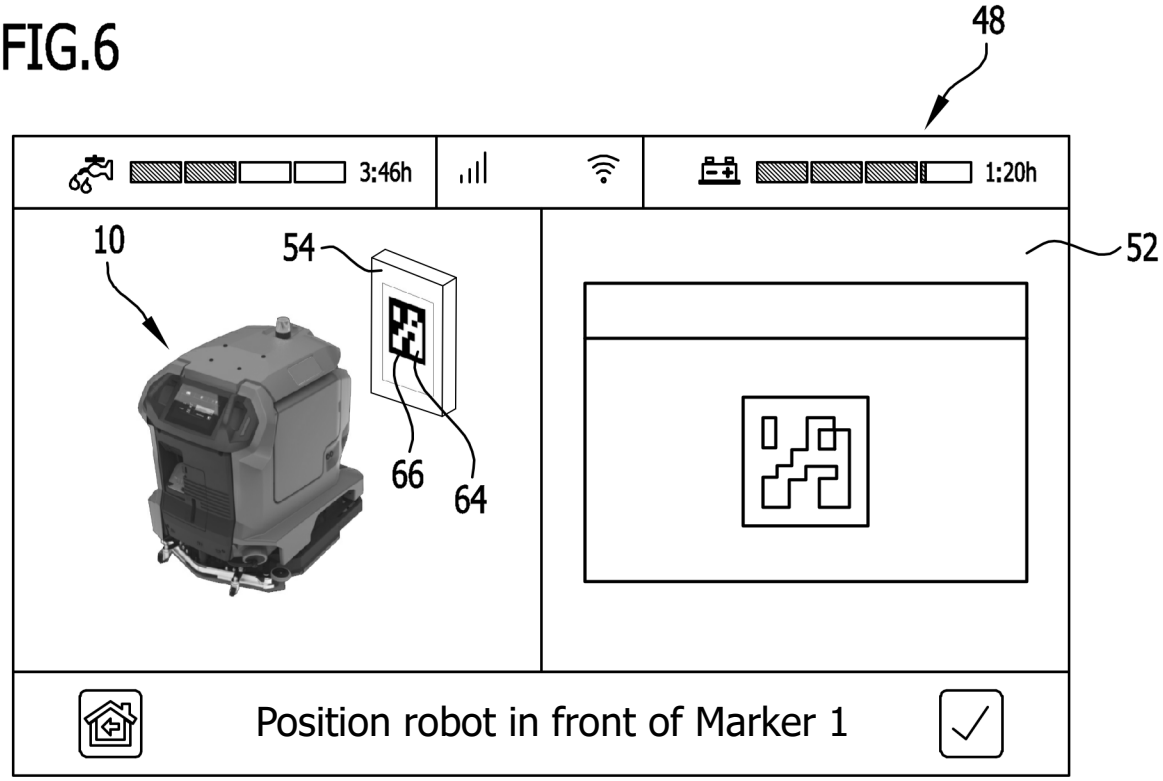
48
3:46h
1:20h
10
54
52
66
64
Position robot in front of Marker 1

FIG.7

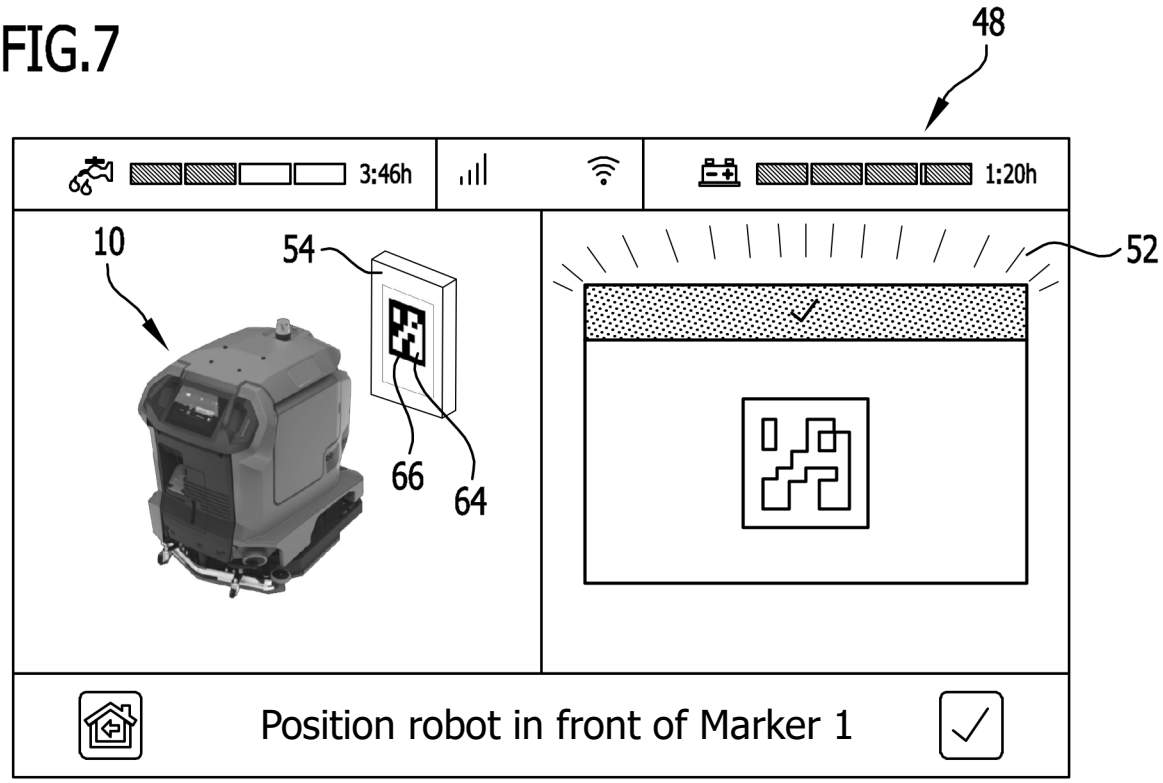
48
3:46h
1:20h
10
54
52
66
64
Position robot in front of Marker 1

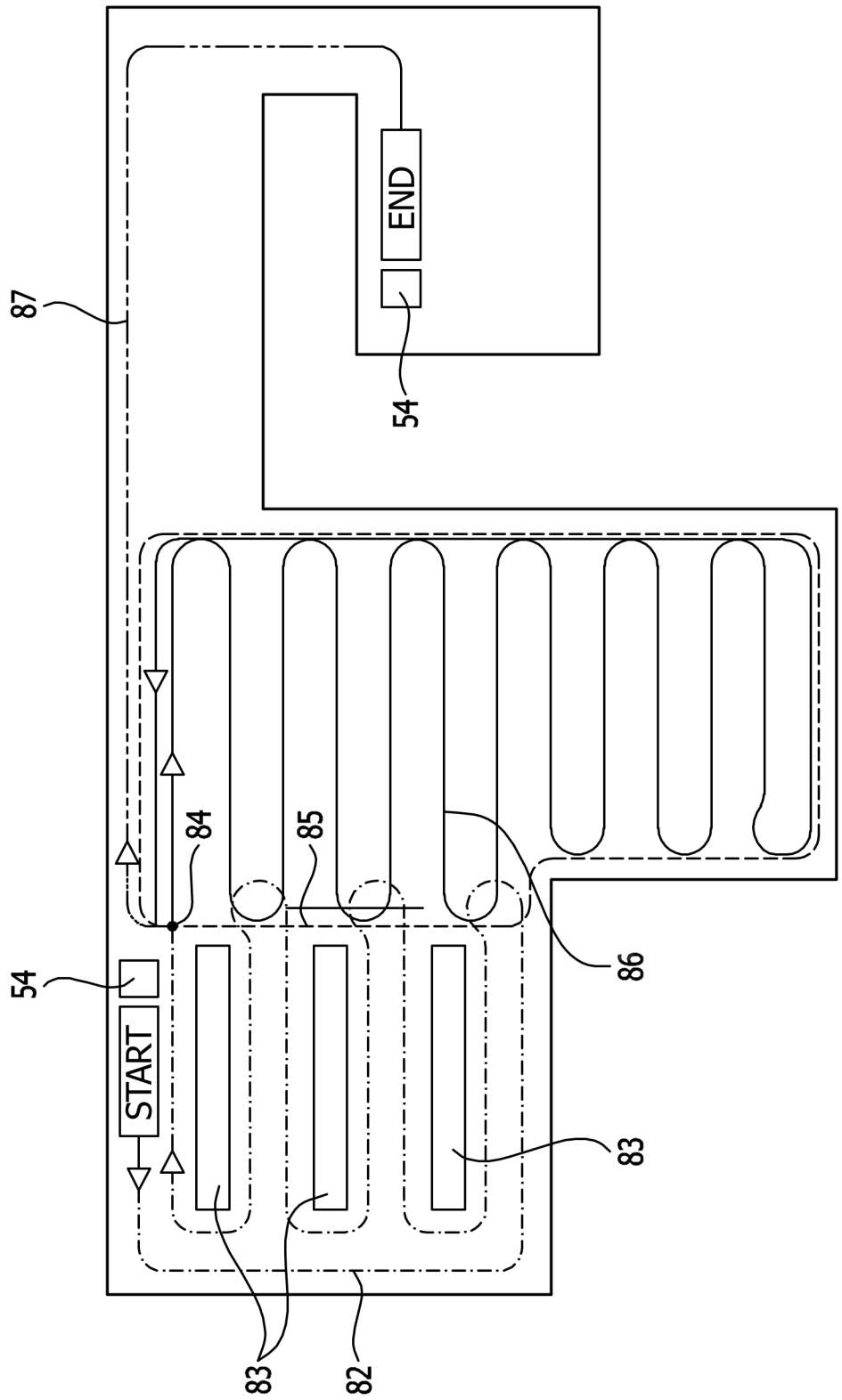

FIG.8

FIG.9

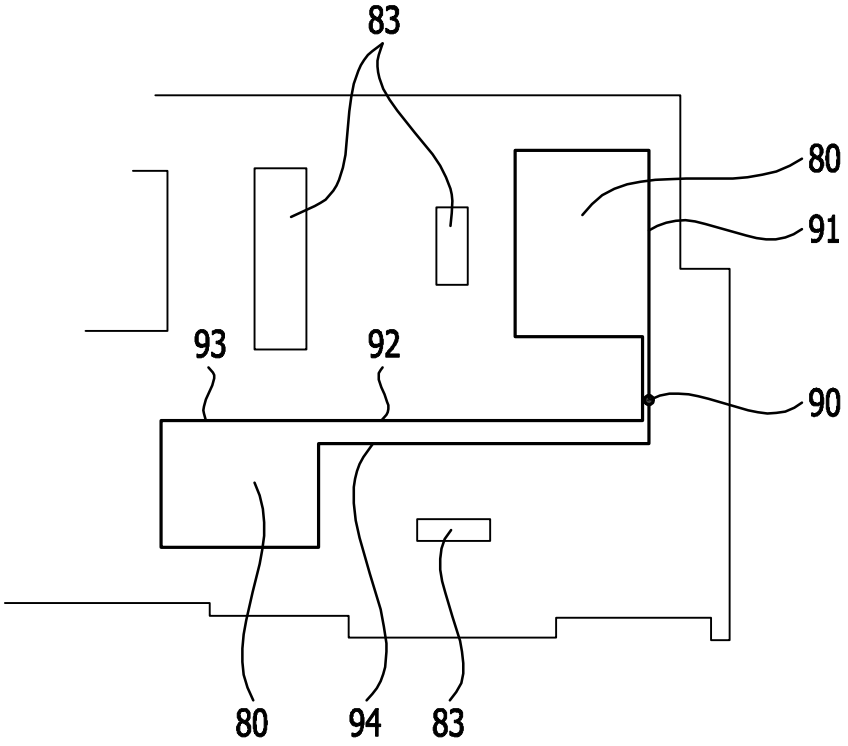

FIG.10

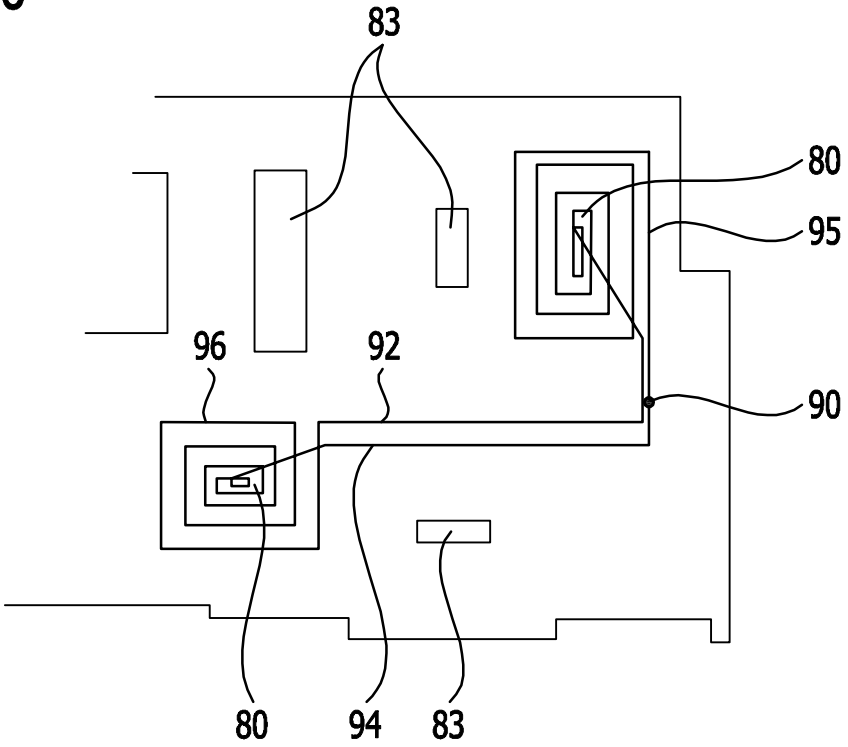

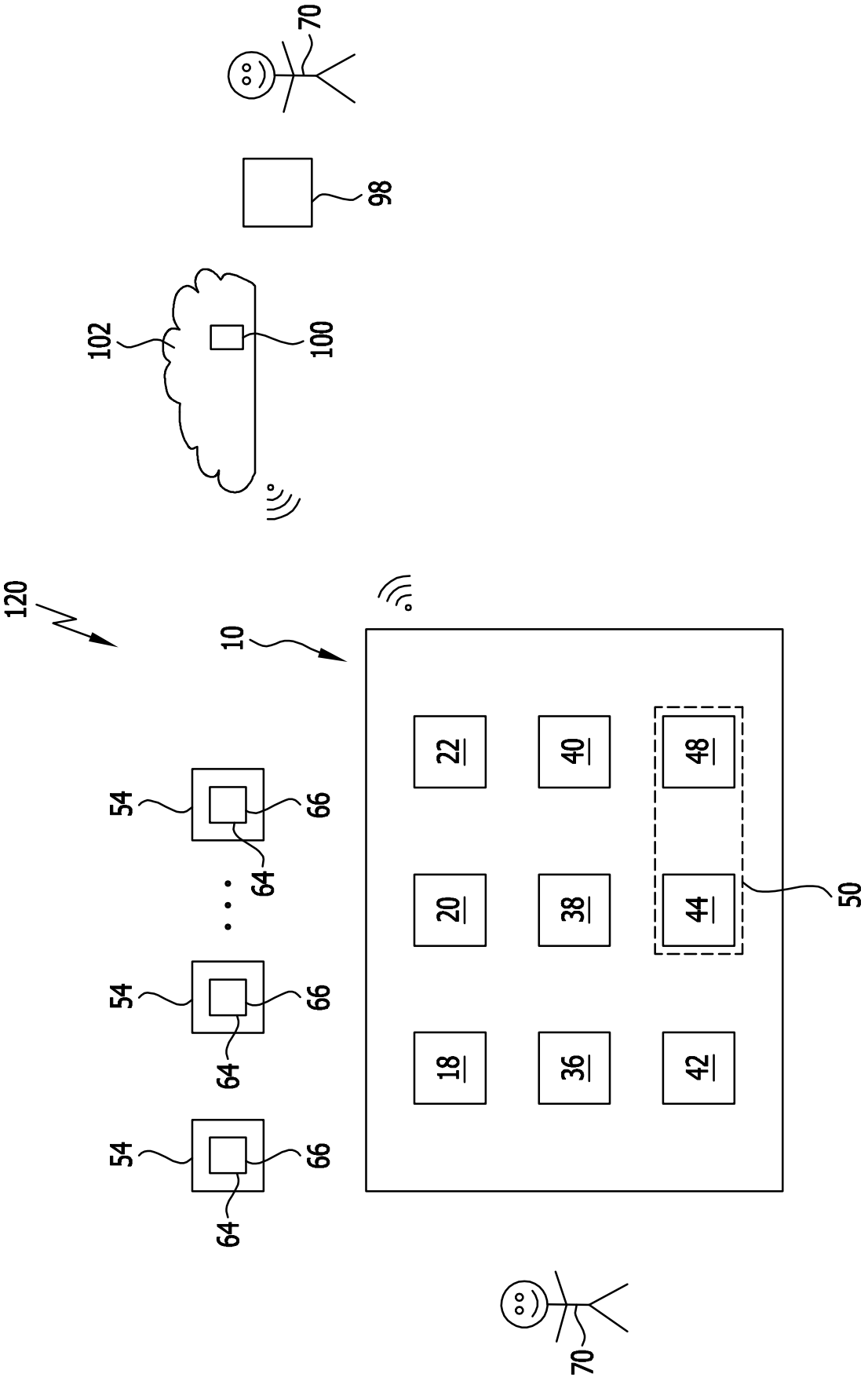
70
98
102
100
120
10
54
66
64
54
66
64
54
66
64
22
40
48
20
38
44
50
18
36
42
70

FIG.11