FIG.1

(a)

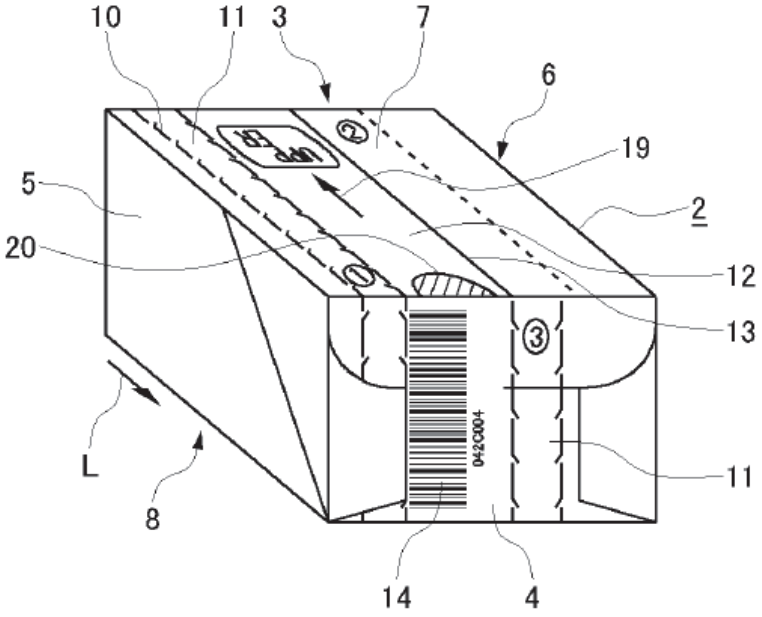


(b)

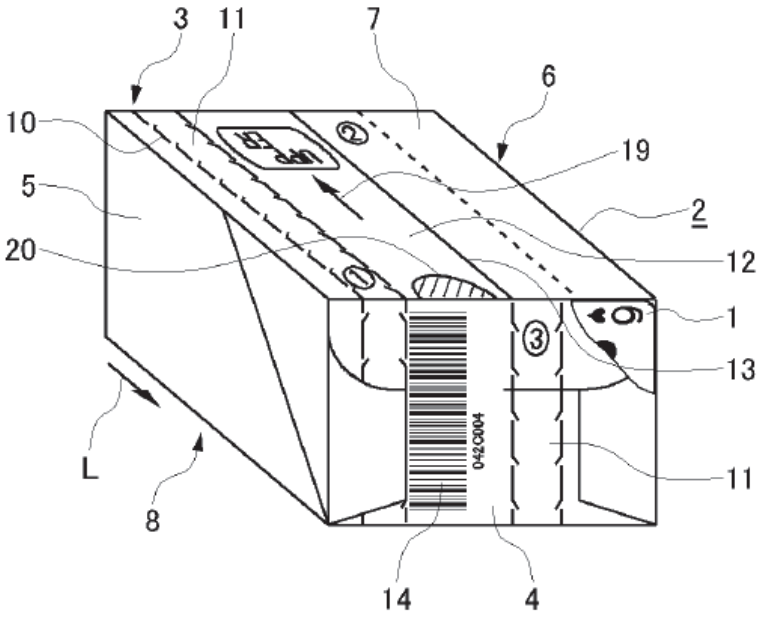

FIG.2

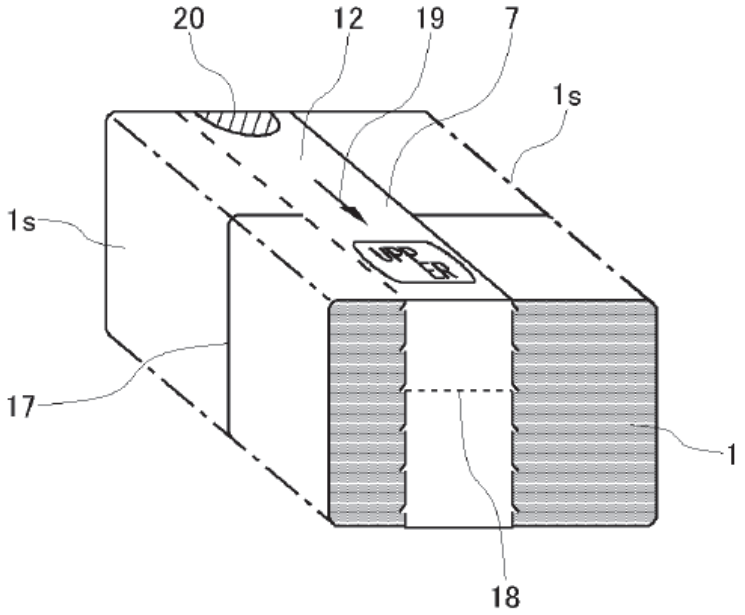

FIG.3

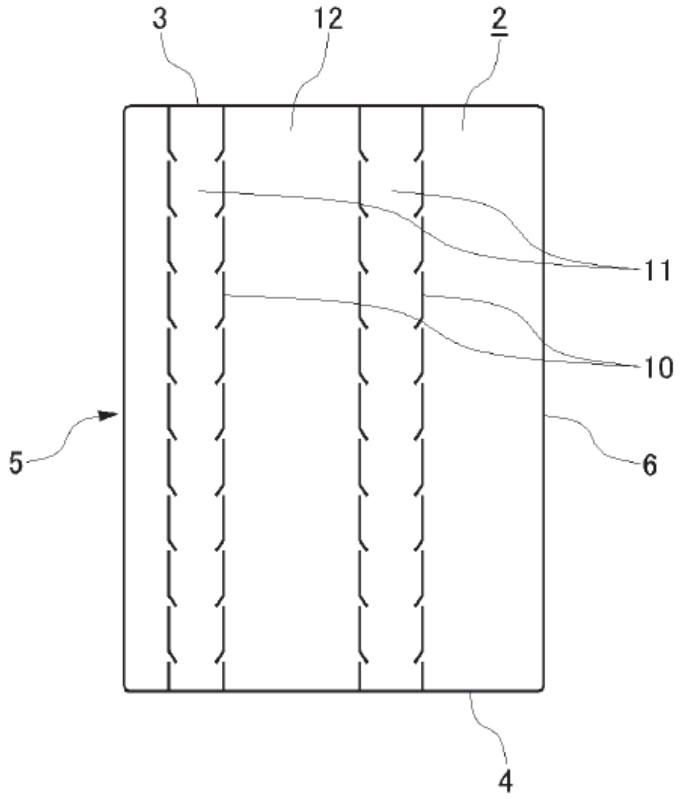

FIG.4

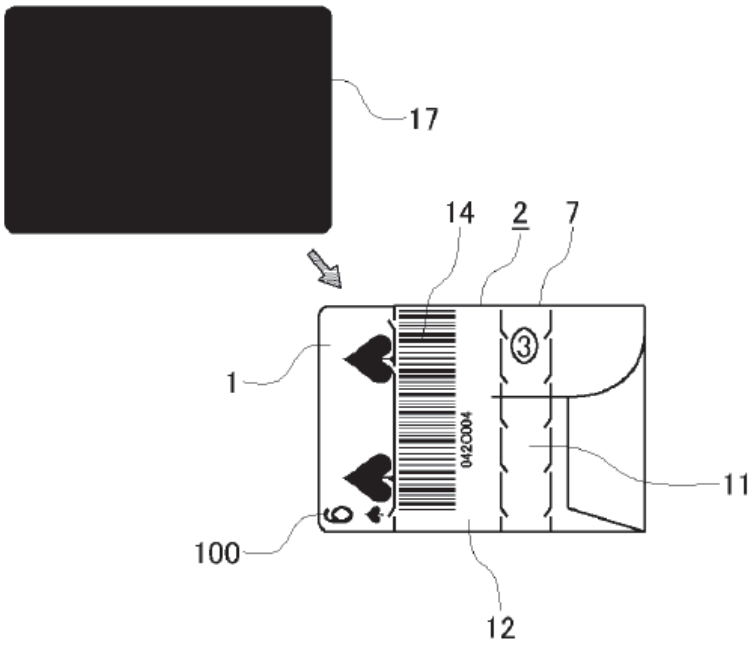

FIG.5

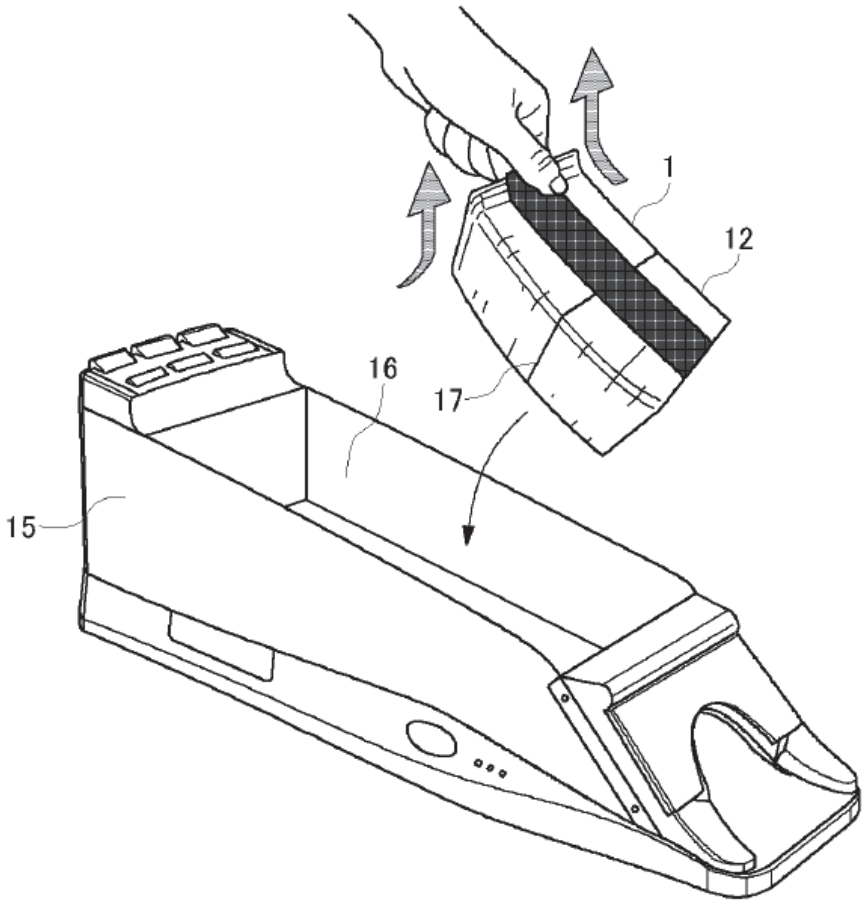

FIG.6

