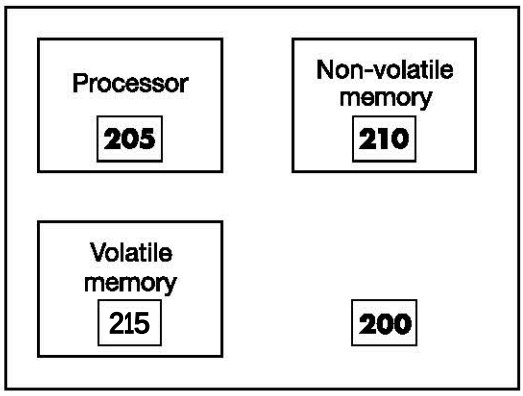
Processor
205
Non-volatile memory
210
Volatile memory
215
200

FIGURE 2

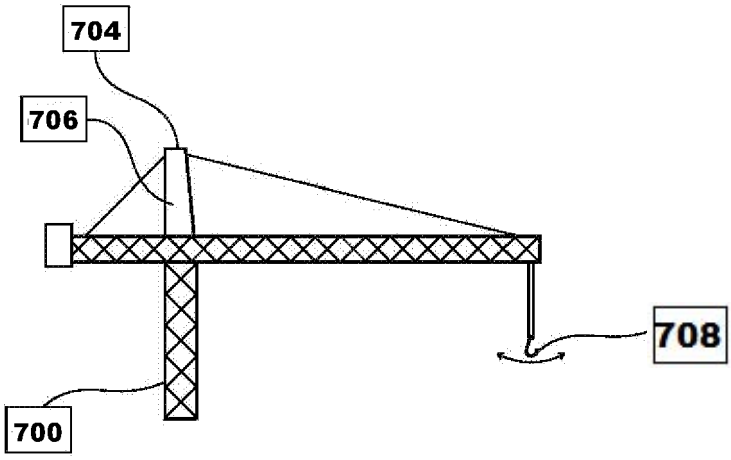

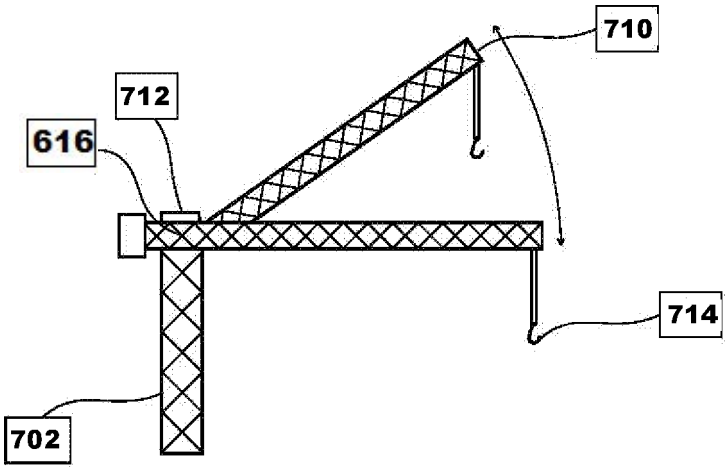

FIGURE 7