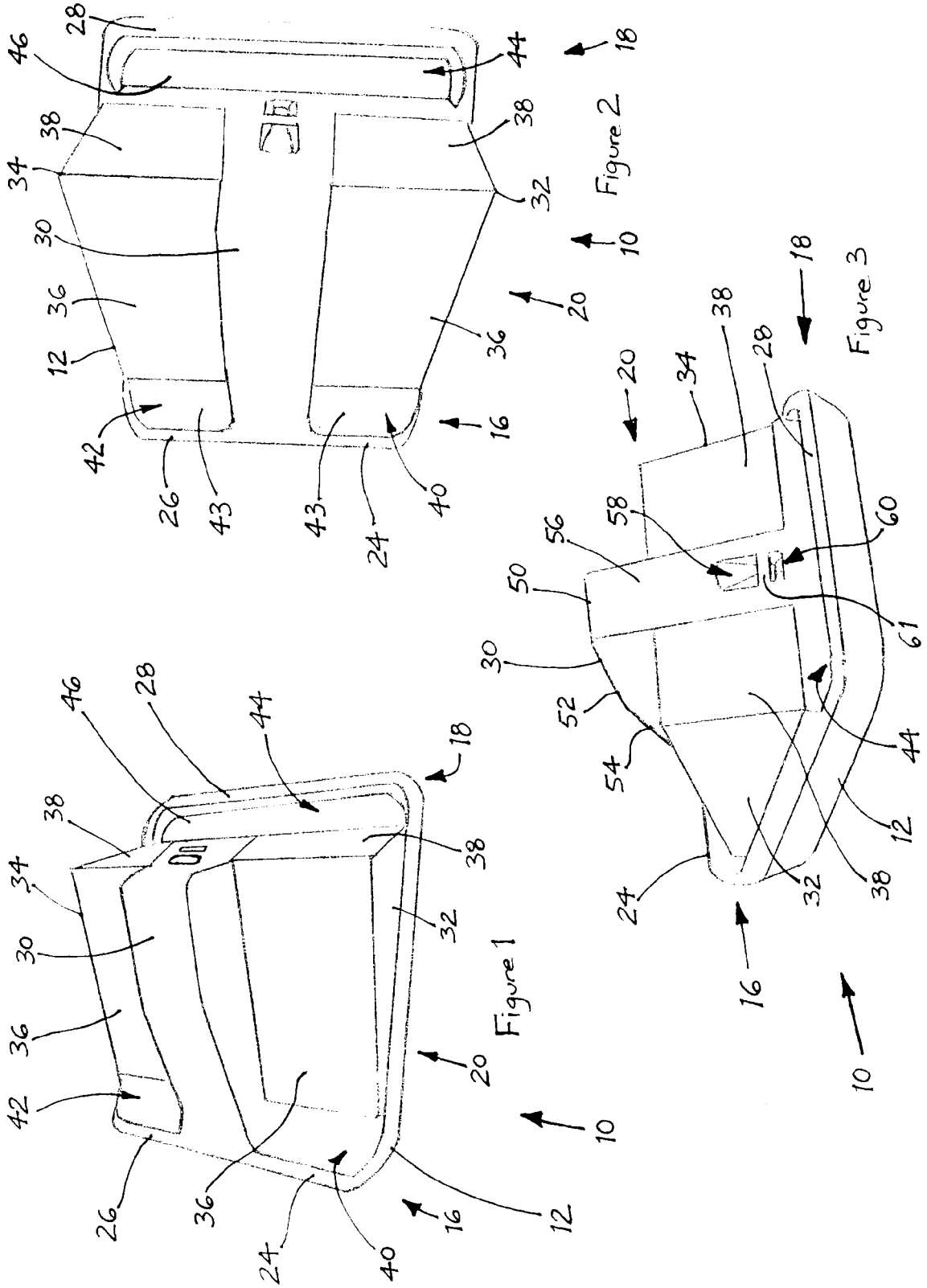

Figure 1

Figure 2

Figure 3

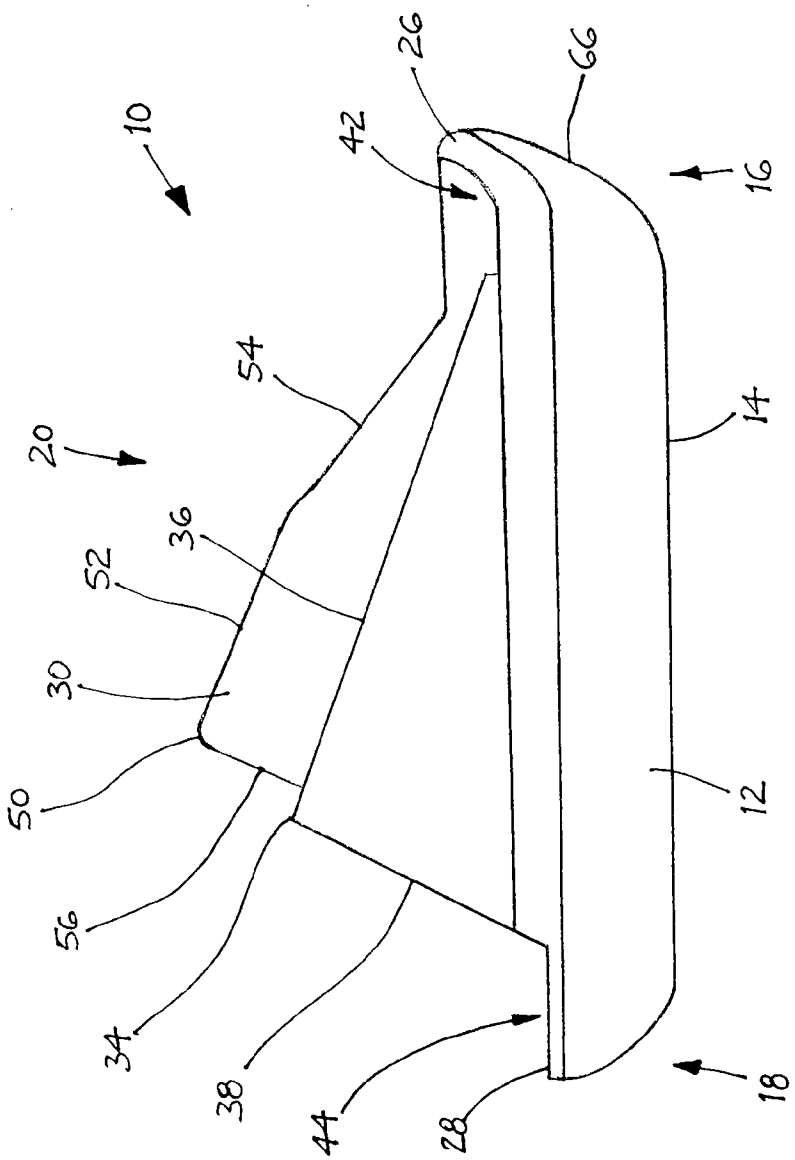

Figure 4

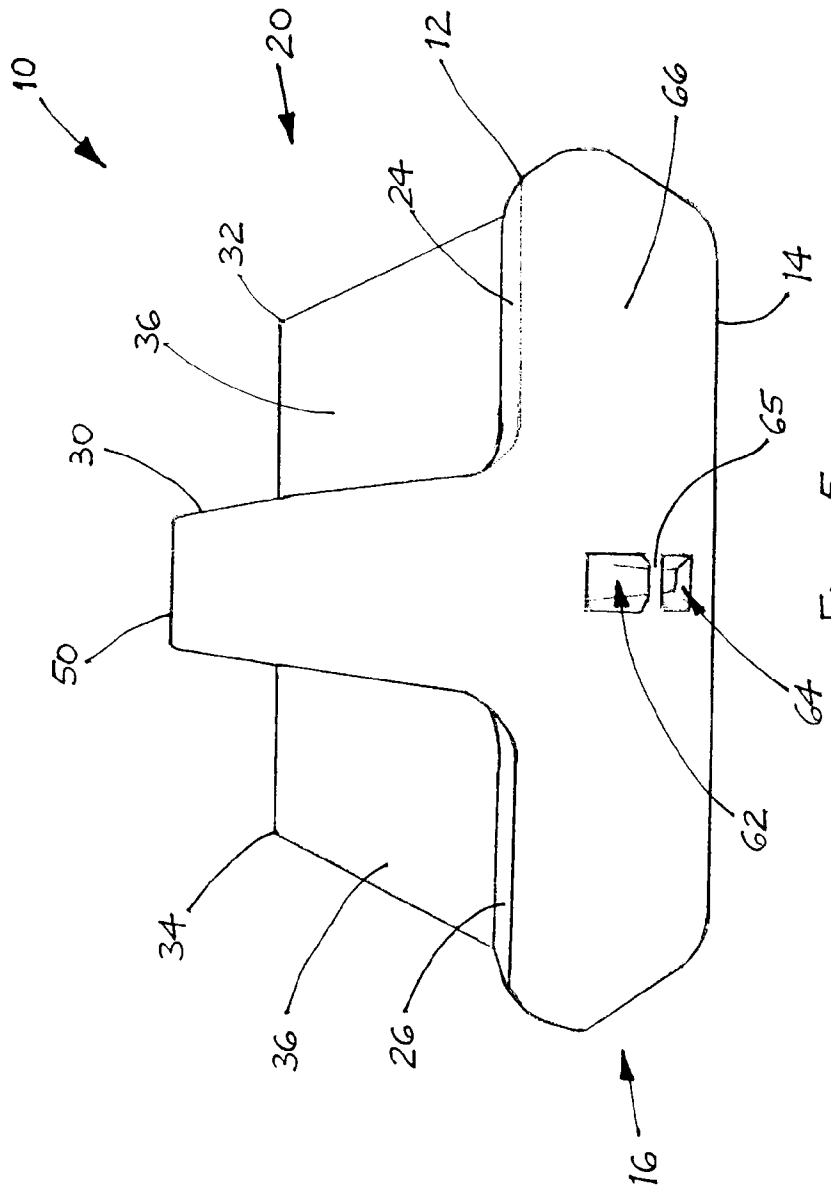

Figure 5

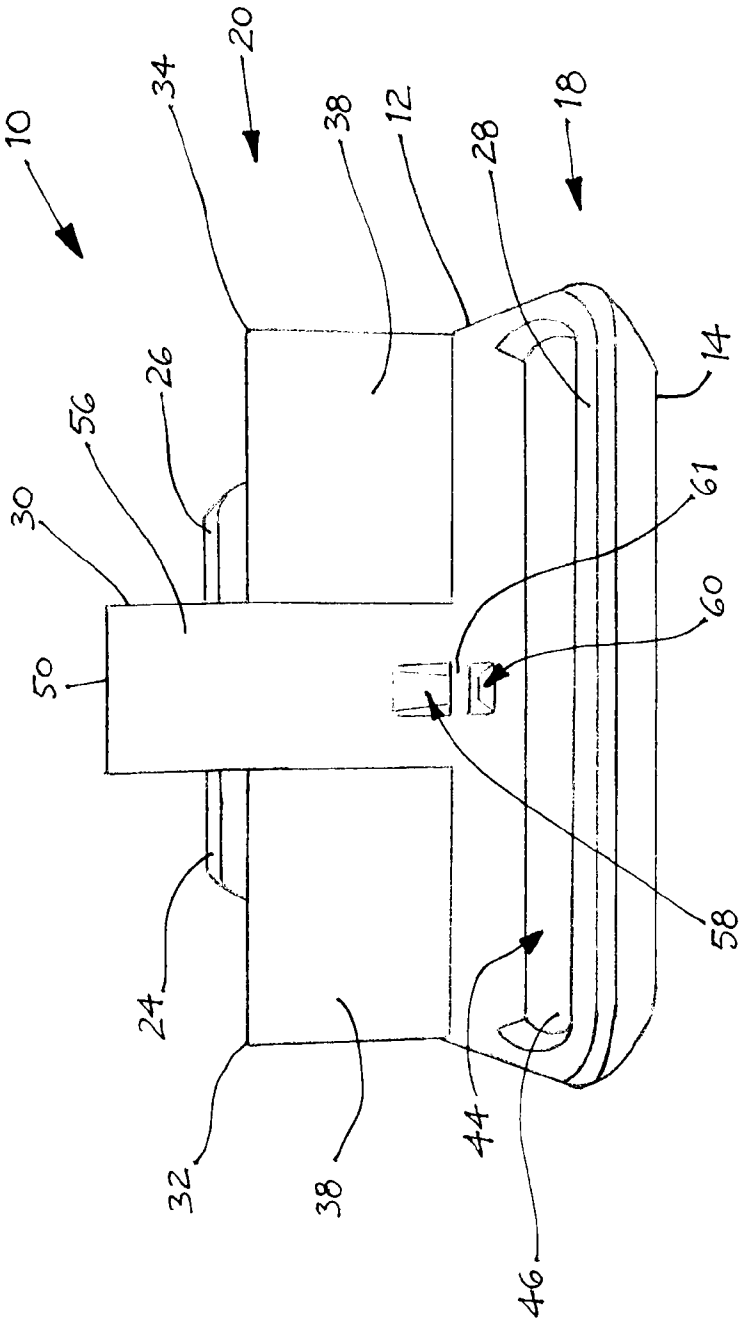

Figure 6

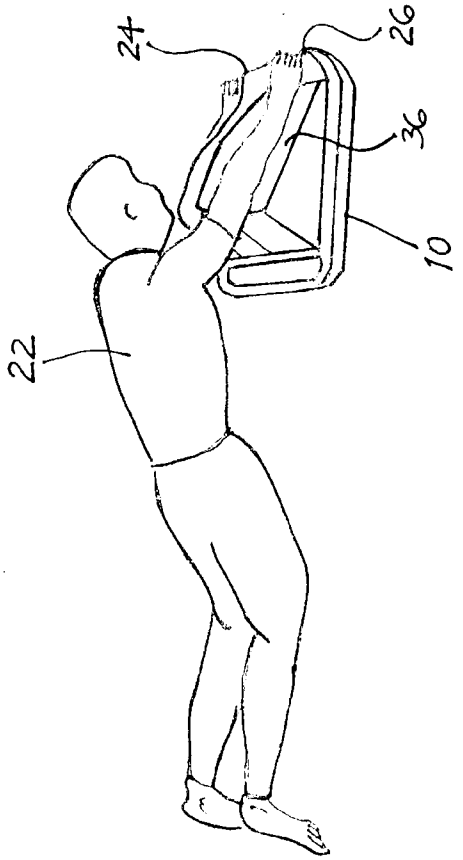

Figure 8

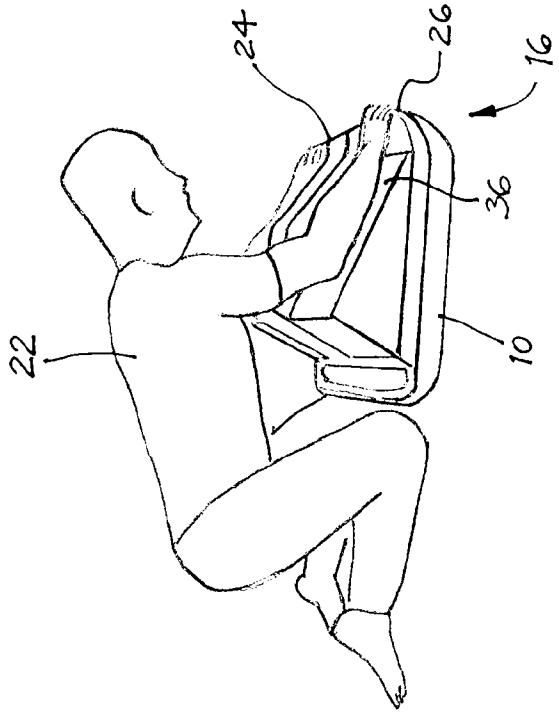

Figure 7

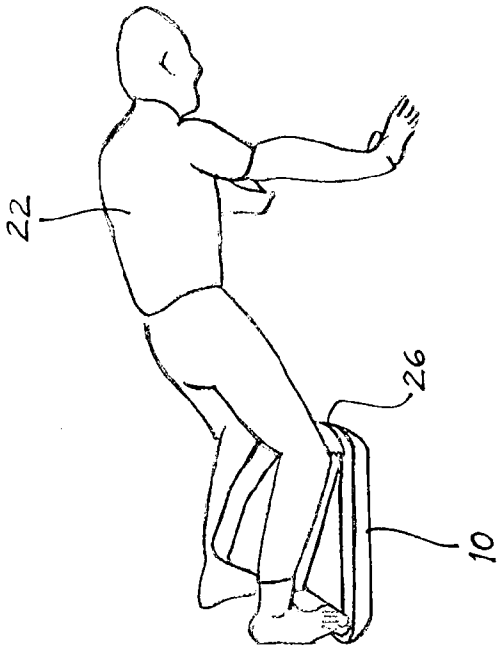

Figure 10

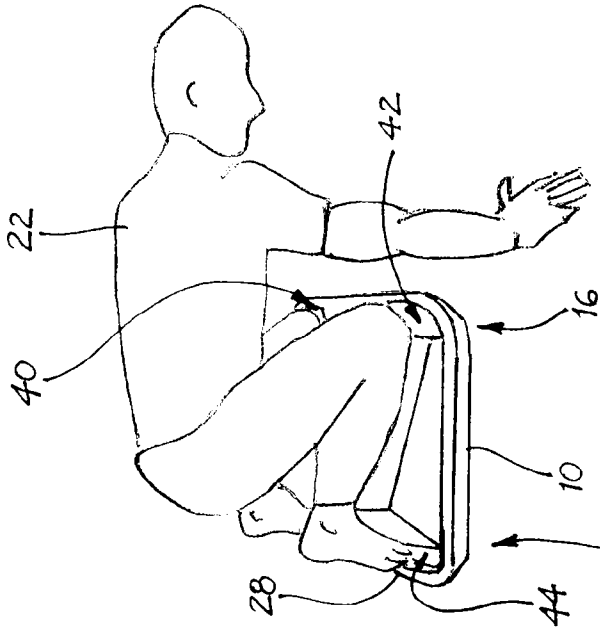

Figure 9

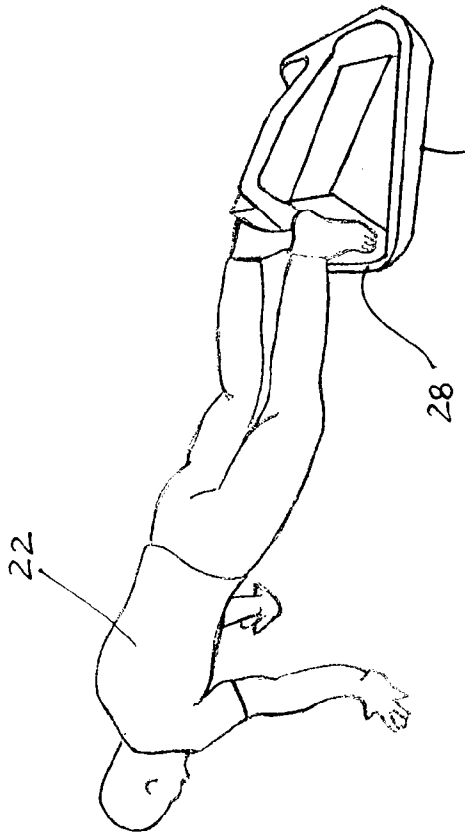

Figure 12

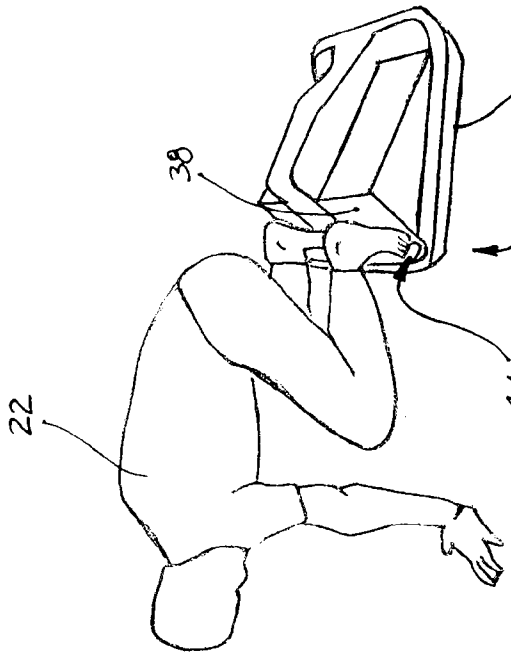

Figure 11

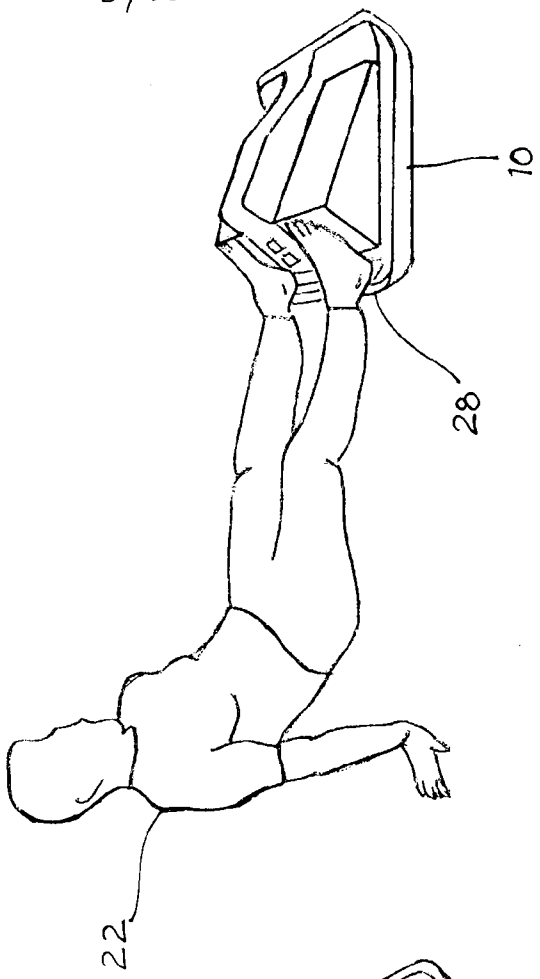

Figure 14

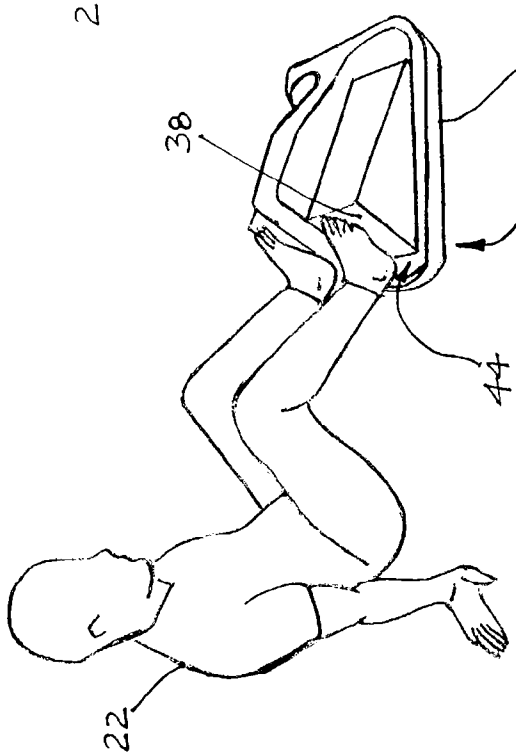

Figure 13

Figure 16

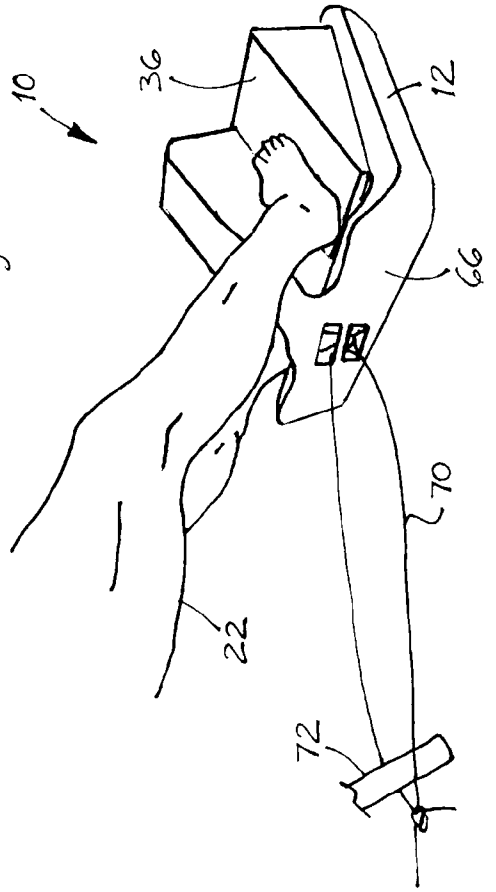

Figure 15

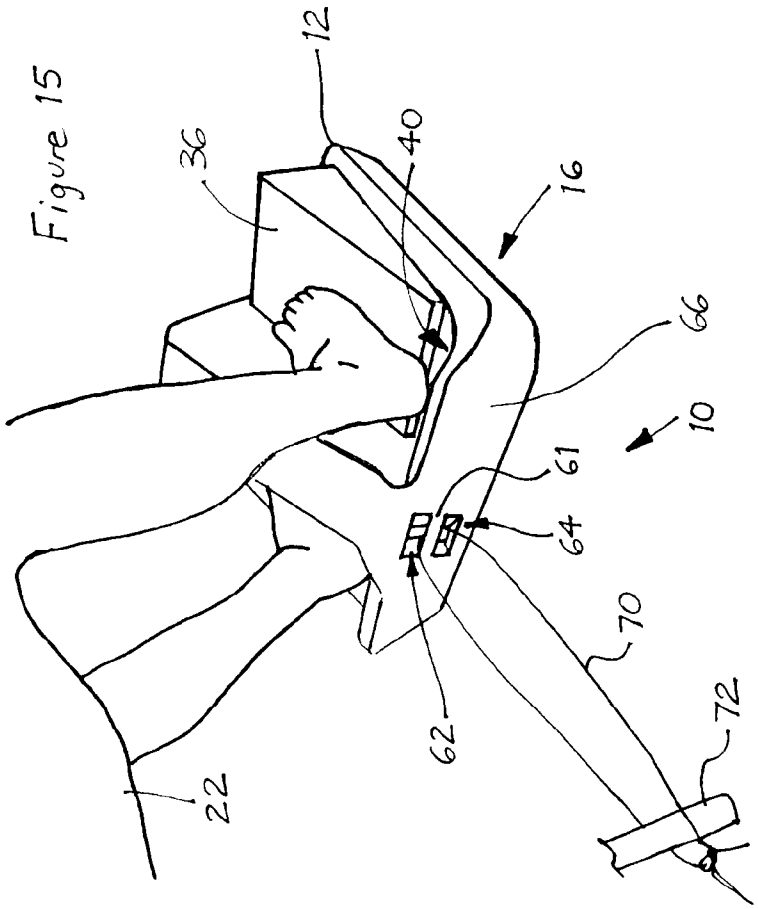

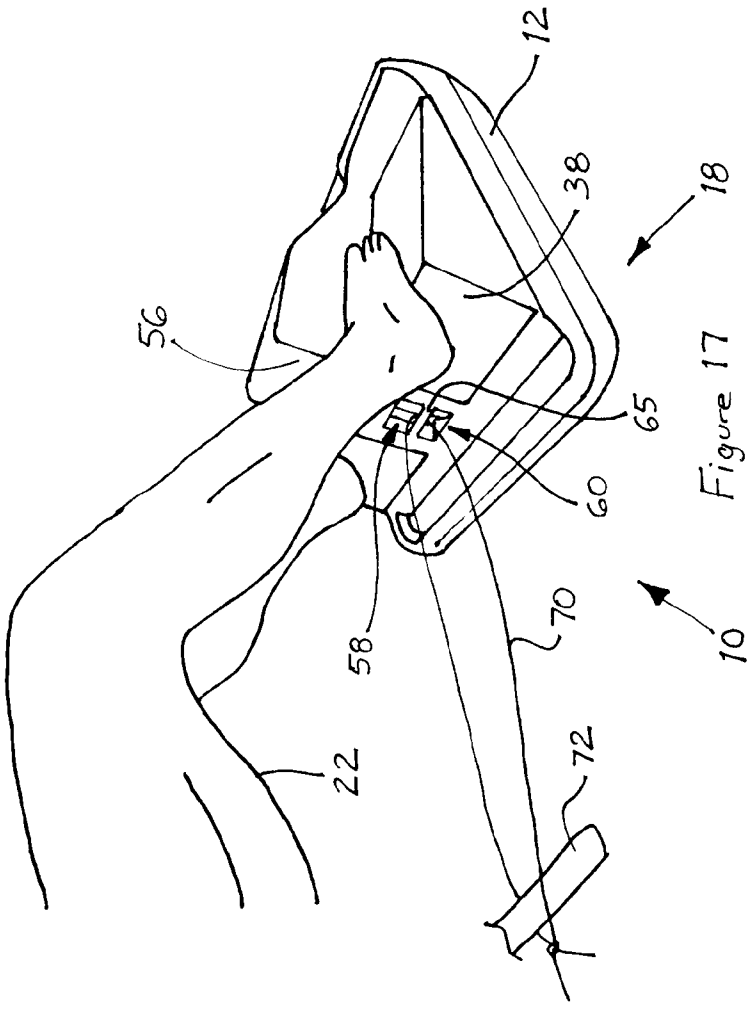

Figure 17