Fig. 1

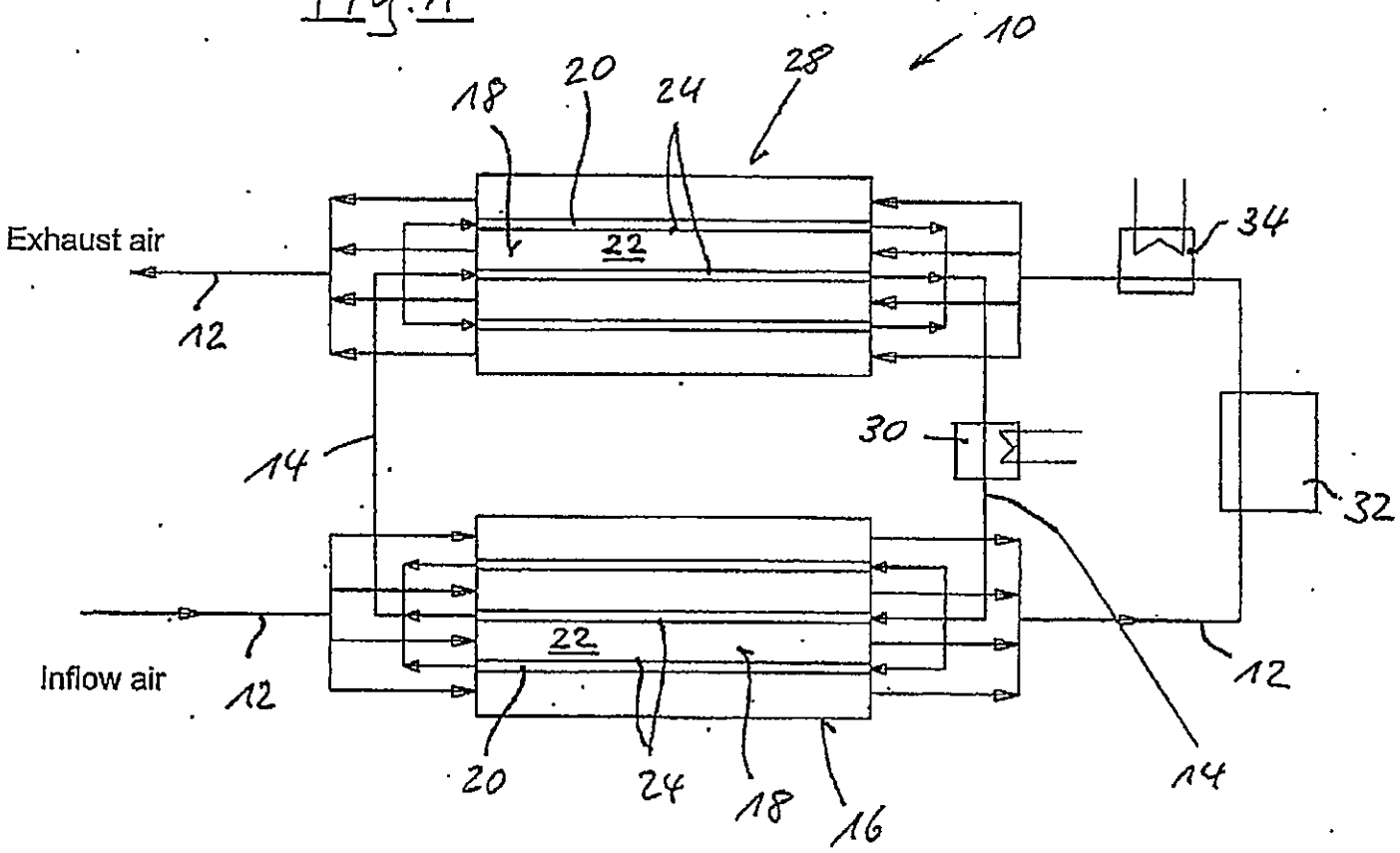
10
18
20
24
28
Exhaust air
12
22
34
14
30
32
Inflow air
12
22
20
24
18
16
14
12

Fig. 2

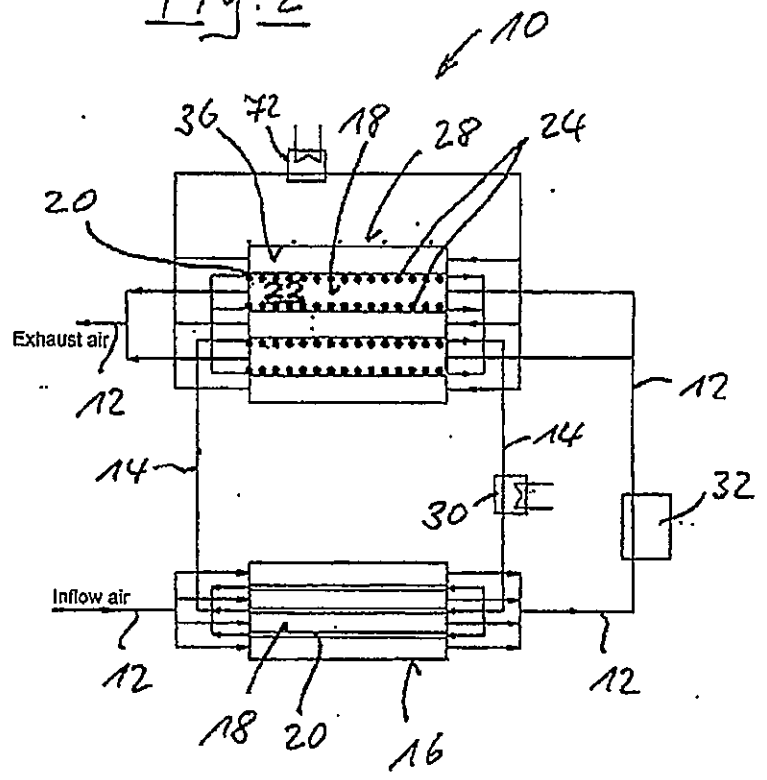
10
36
72
18
28
24
20
22
Exhaust air
12
12
14
14
30
32
Inflow air
12
12
18
20
16

Fig. 3

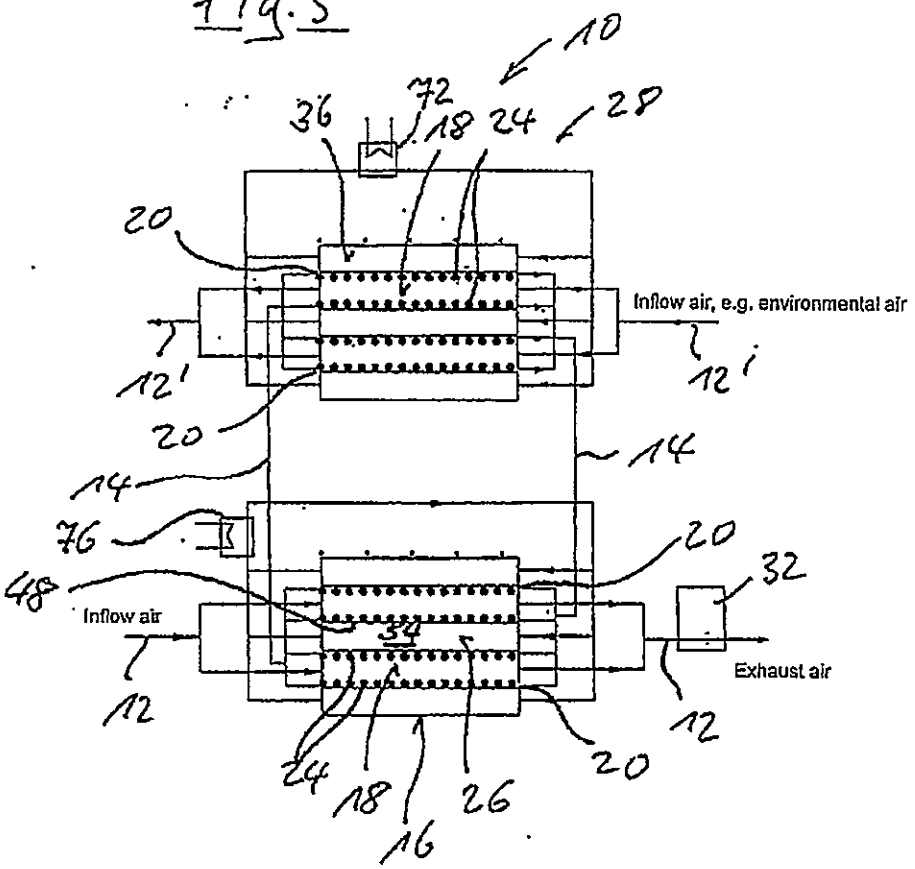
10
72
36
18
24
28
20
Inflow air, e.g. environmental air
12'
12'
20
14
14
76
20
32
48
Inflow air
34
Exhaust air
12
12
24
18
26
20
16

Fig. 4

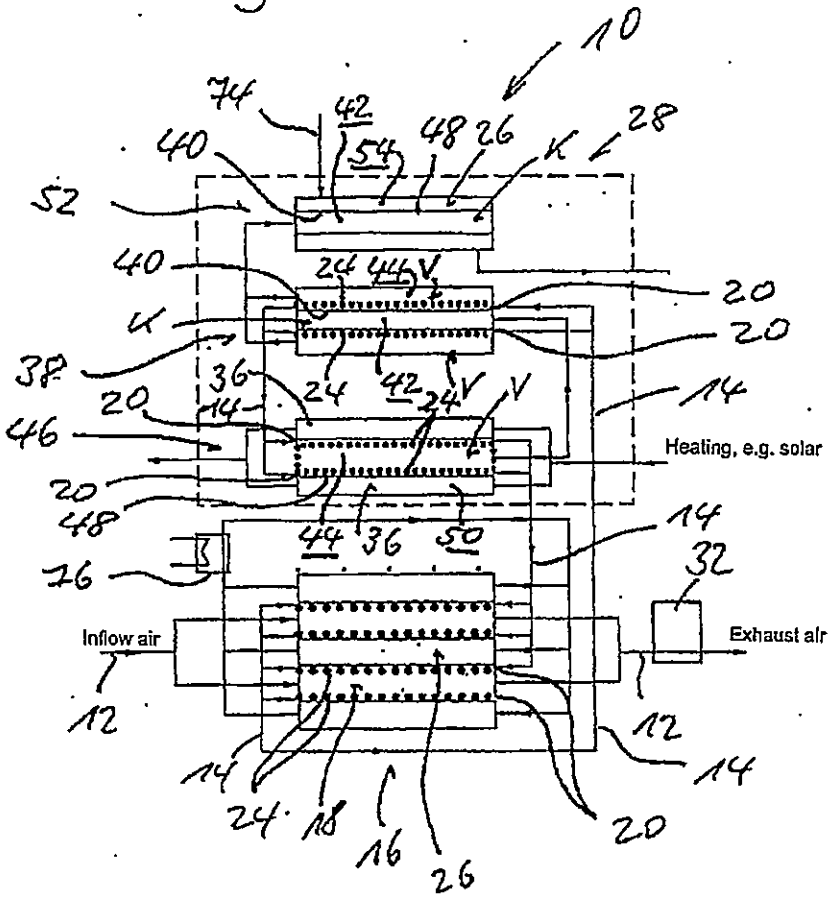
10
74
42
54
48
26
28
K
40
52
24
44
V
20
38
36
14
46
Heating, e.g. solar
48
50
76
32
Inflow air
Exhaust air
12
18
16

Fig. 5

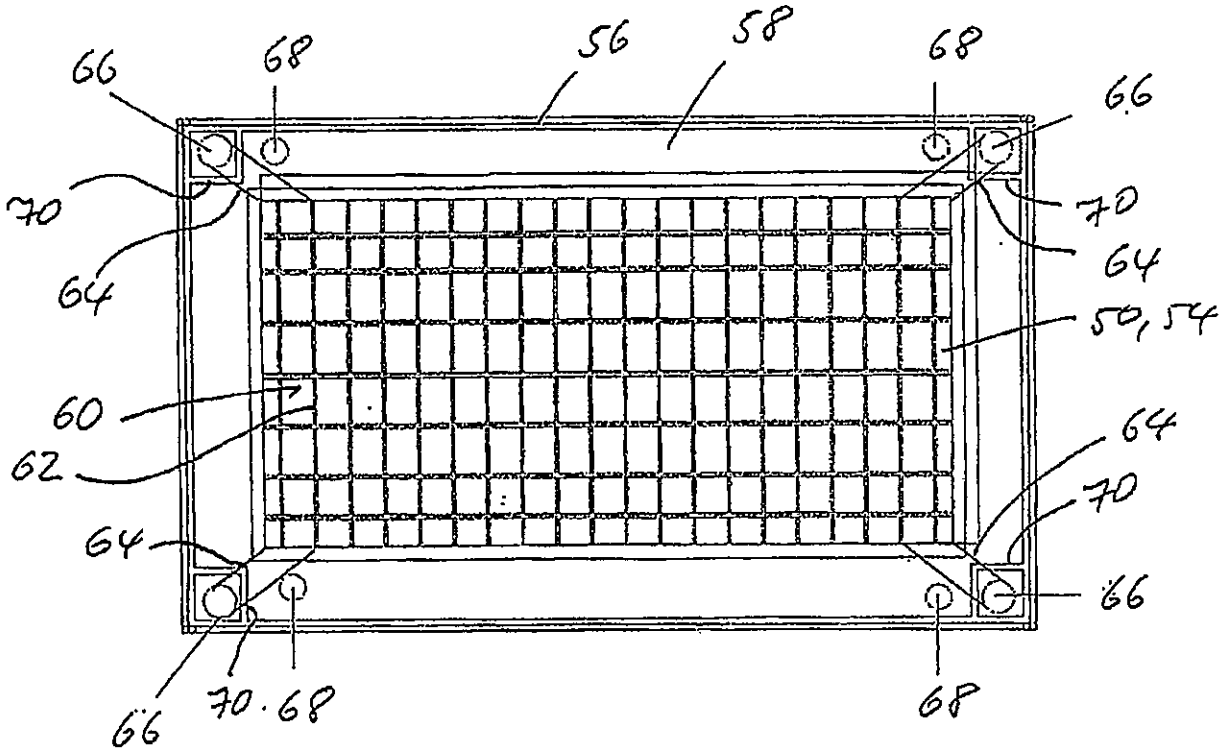

Fig. 6

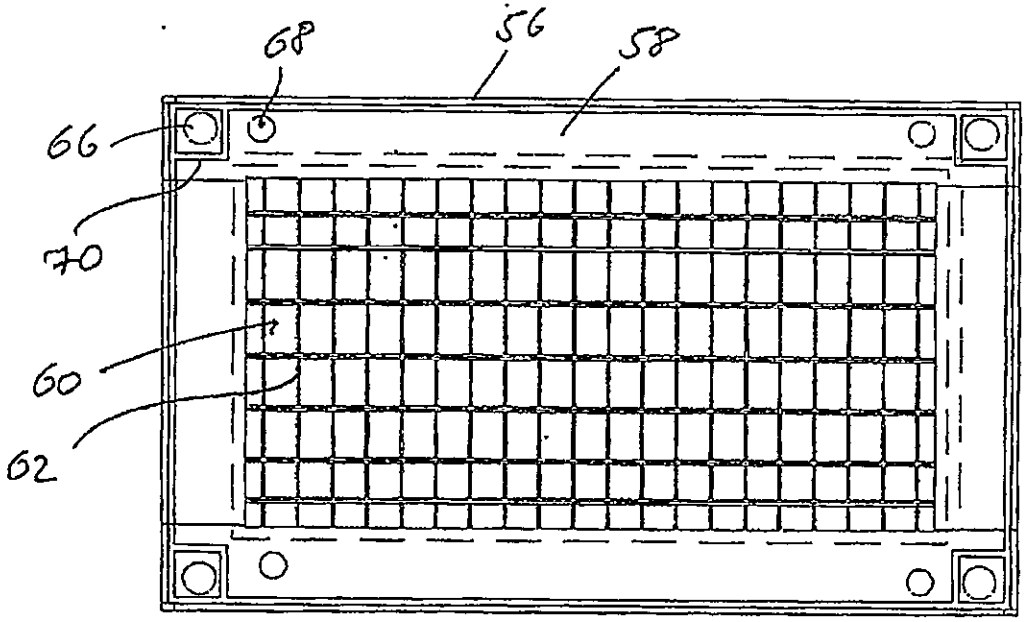

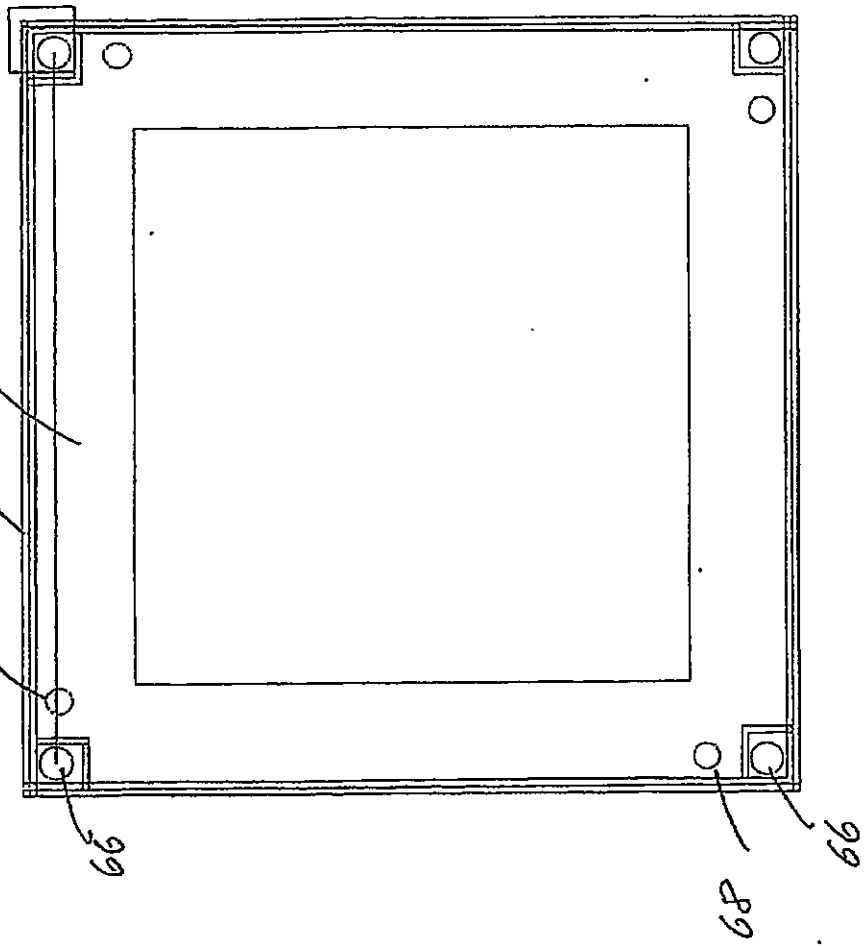

Fig. 7