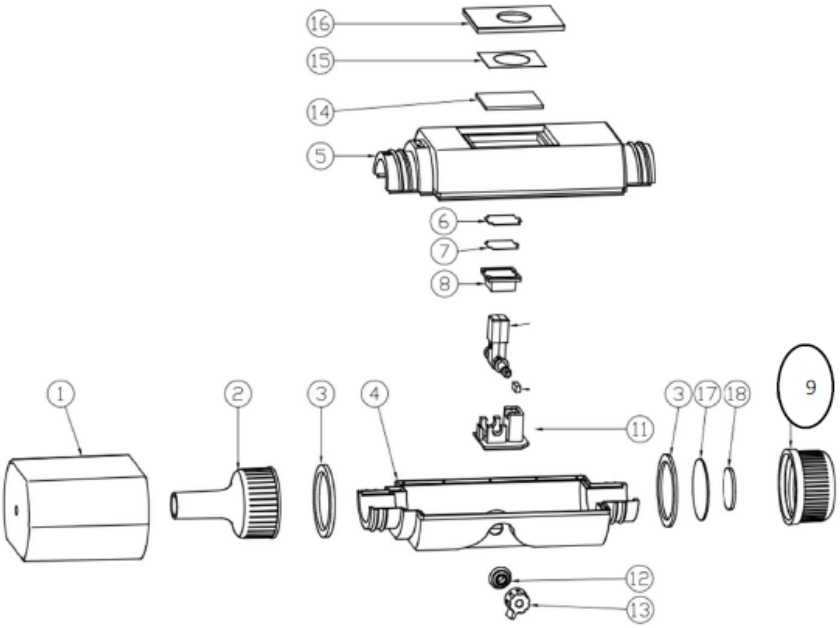

FIGURE 1

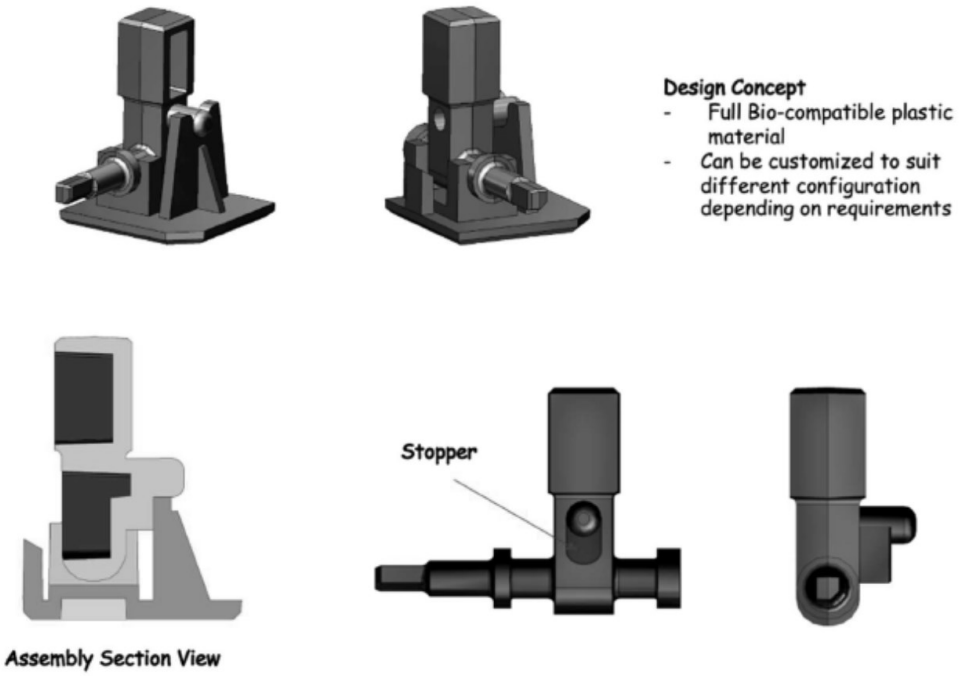

FIGURE 2

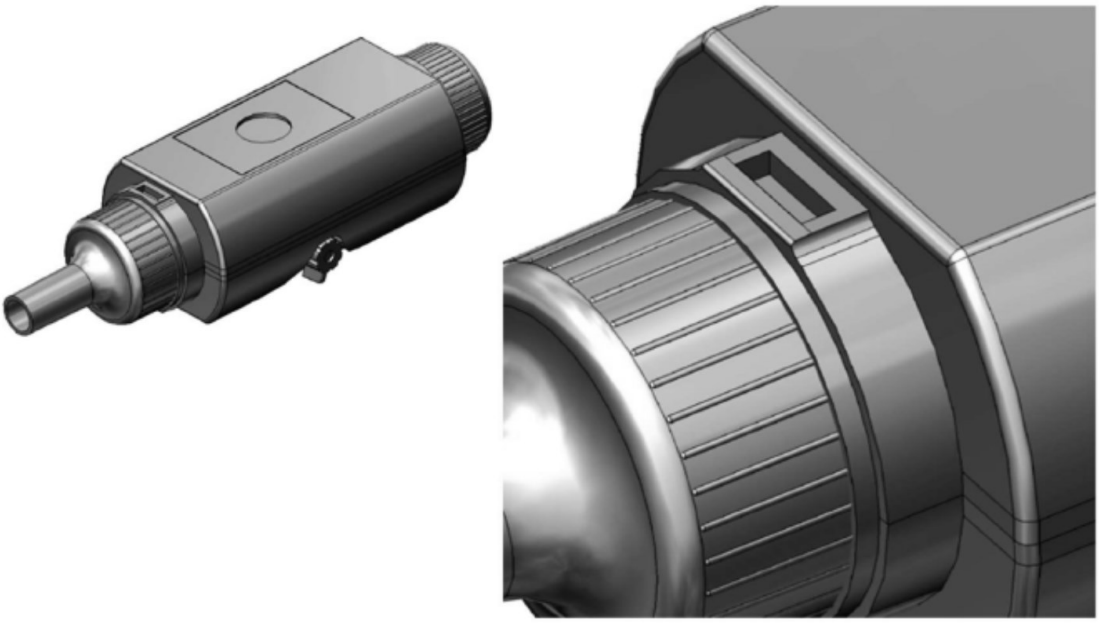

FIGURE 3

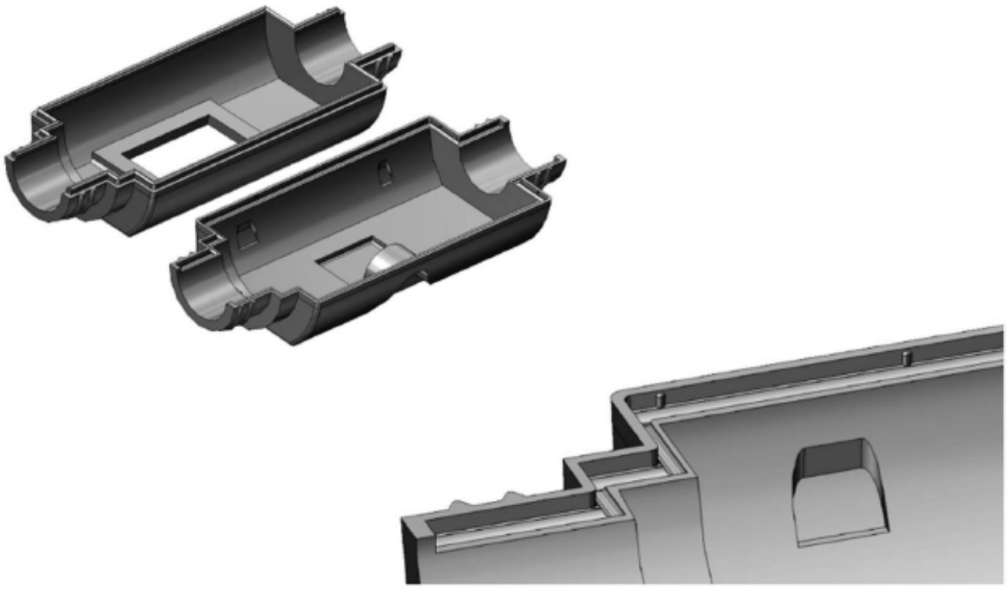

FIGURE 4