FIG.1

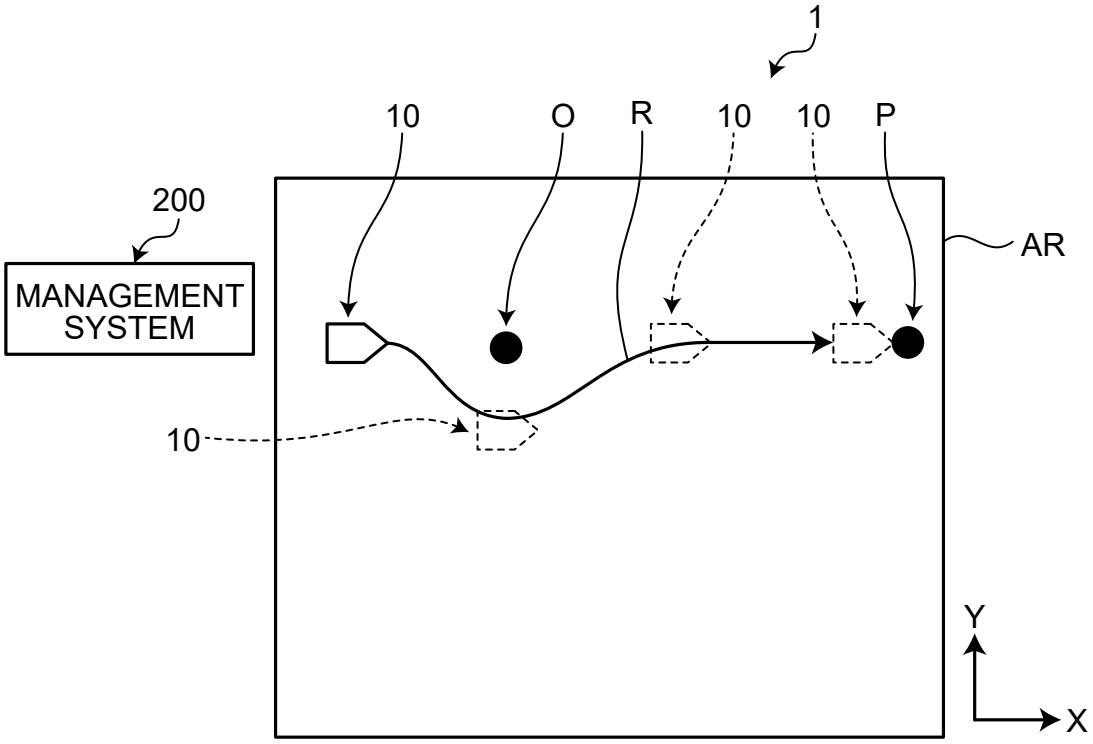

FIG.2

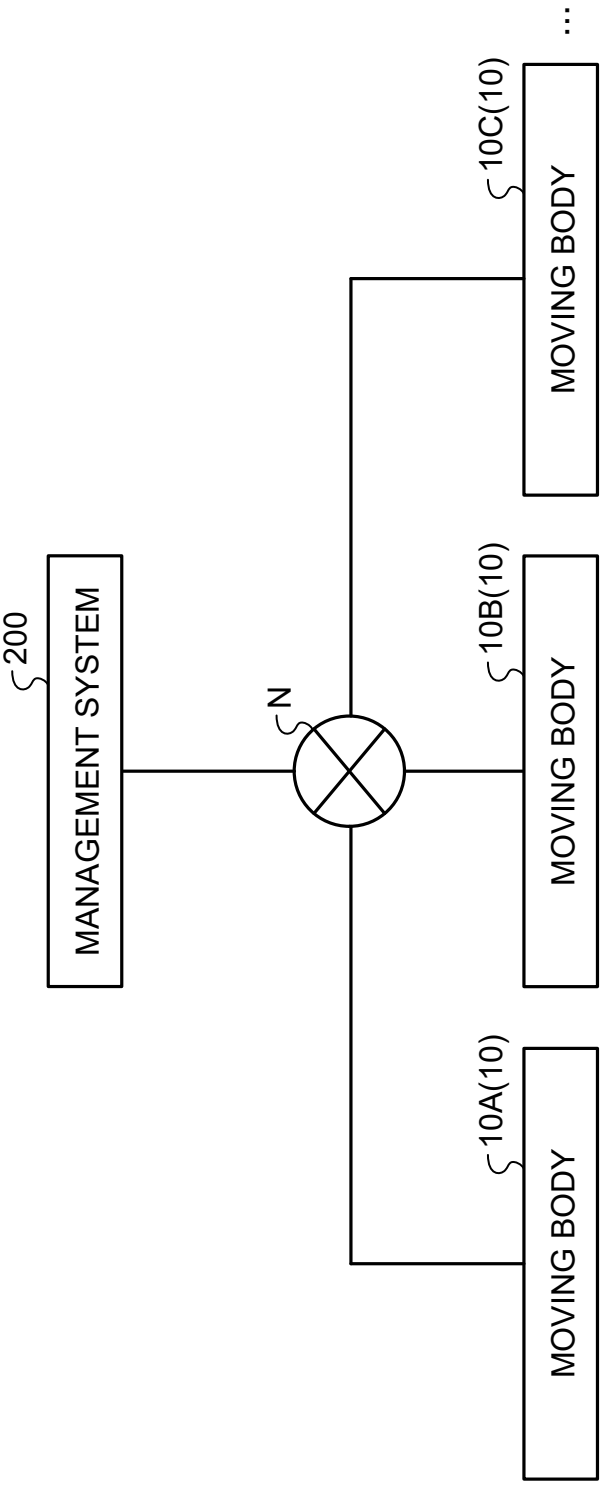
MANAGEMENT SYSTEM
200
N
MOVING BODY
10A(10)
MOVING BODY
10B(10)
MOVING BODY
10C(10)
...

FIG.3

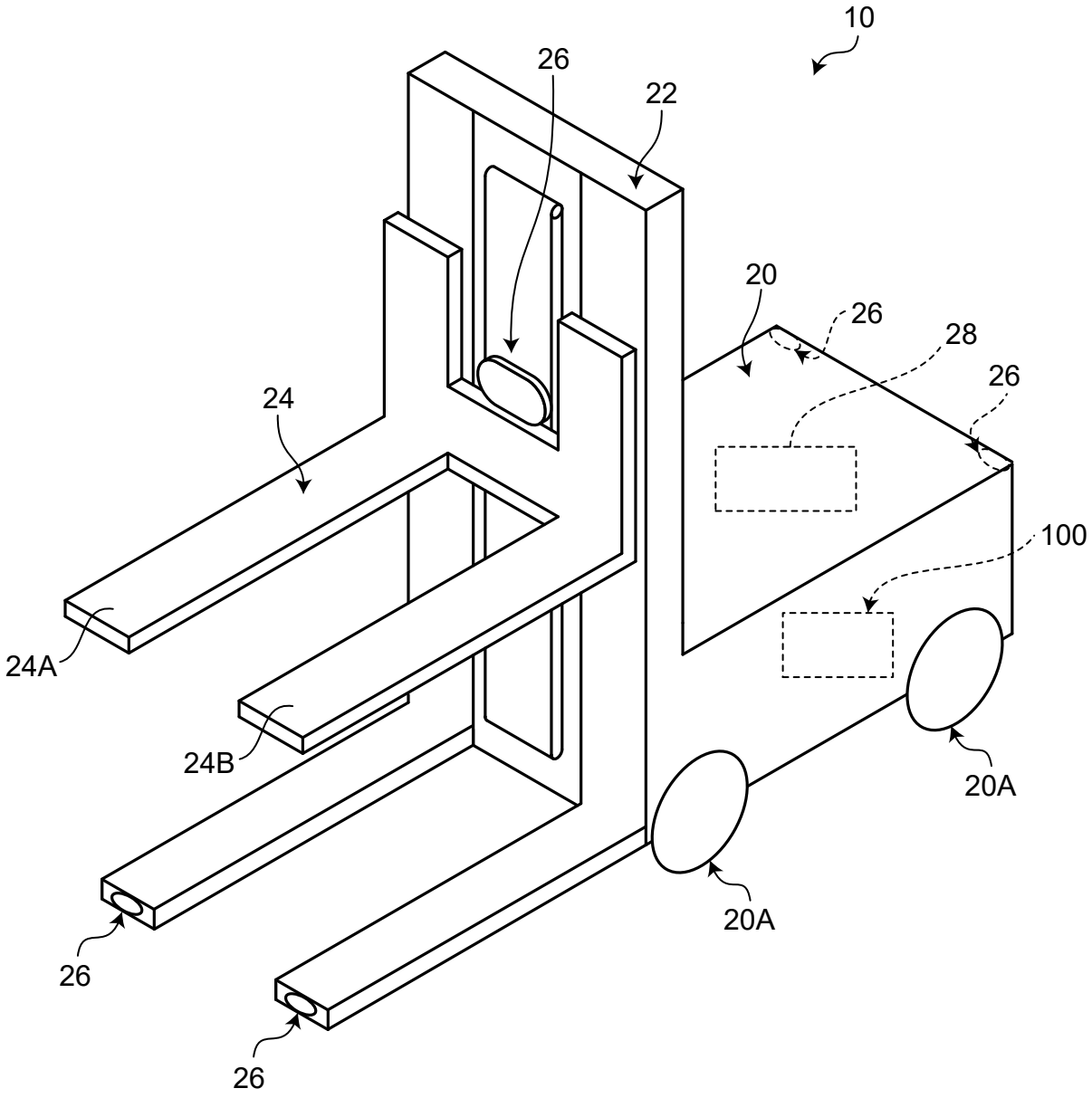

FIG.4

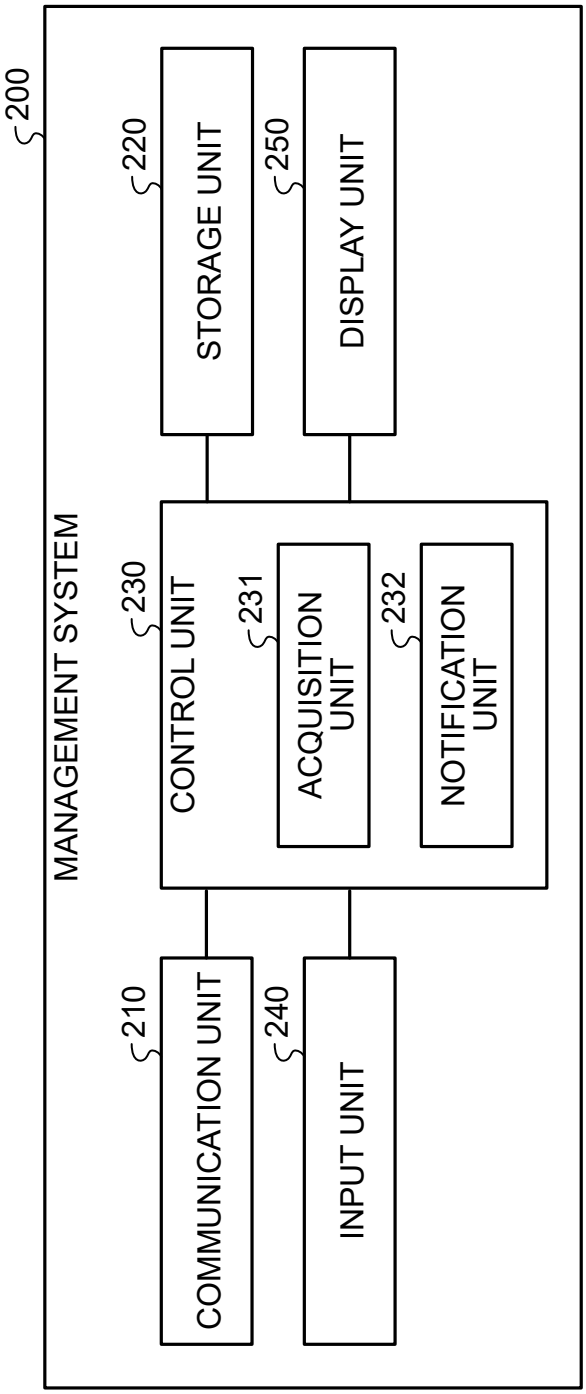
200
MANAGEMENT SYSTEM
210
COMMUNICATION UNIT
220
STORAGE UNIT
230
CONTROL UNIT
231
ACQUISITION UNIT
232
NOTIFICATION UNIT
240
INPUT UNIT
250
DISPLAY UNIT

FIG.5

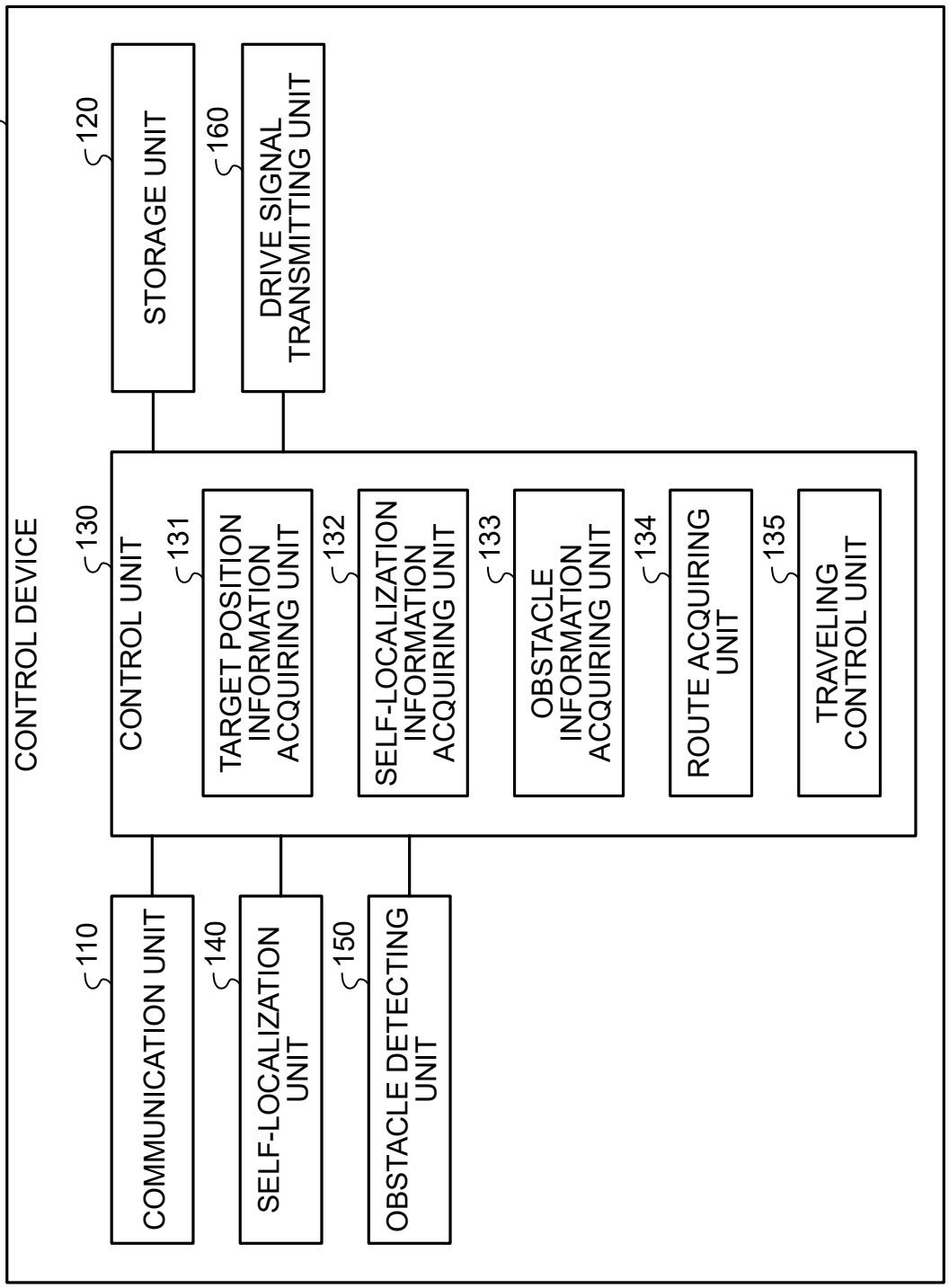
100
CONTROL DEVICE
120
STORAGE UNIT
160
DRIVE SIGNAL TRANSMITTING UNIT
130
CONTROL UNIT
131
TARGET POSITION INFORMATION ACQUIRING UNIT
132
SELF-LOCALIZATION INFORMATION ACQUIRING UNIT
133
OBSTACLE INFORMATION ACQUIRING UNIT
134
ROUTE ACQUIRING UNIT
135
TRAVELING CONTROL UNIT
110
COMMUNICATION UNIT
140
SELF-LOCALIZATION UNIT
150
OBSTACLE DETECTING UNIT

FIG.6

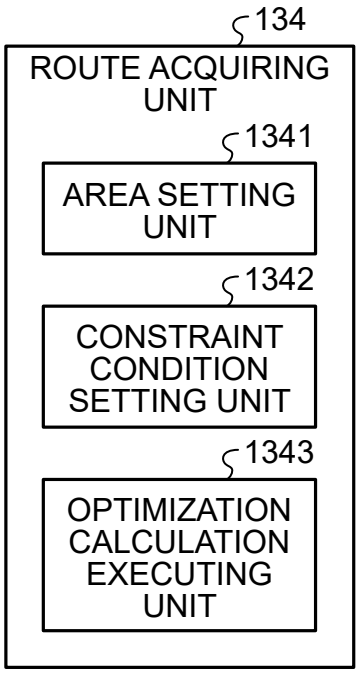
134
ROUTE ACQUIRING UNIT
1341
AREA SETTING UNIT
1342
CONSTRAINT CONDITION SETTING UNIT
1343
OPTIMIZATION CALCULATION EXECUTING UNIT

FIG.7

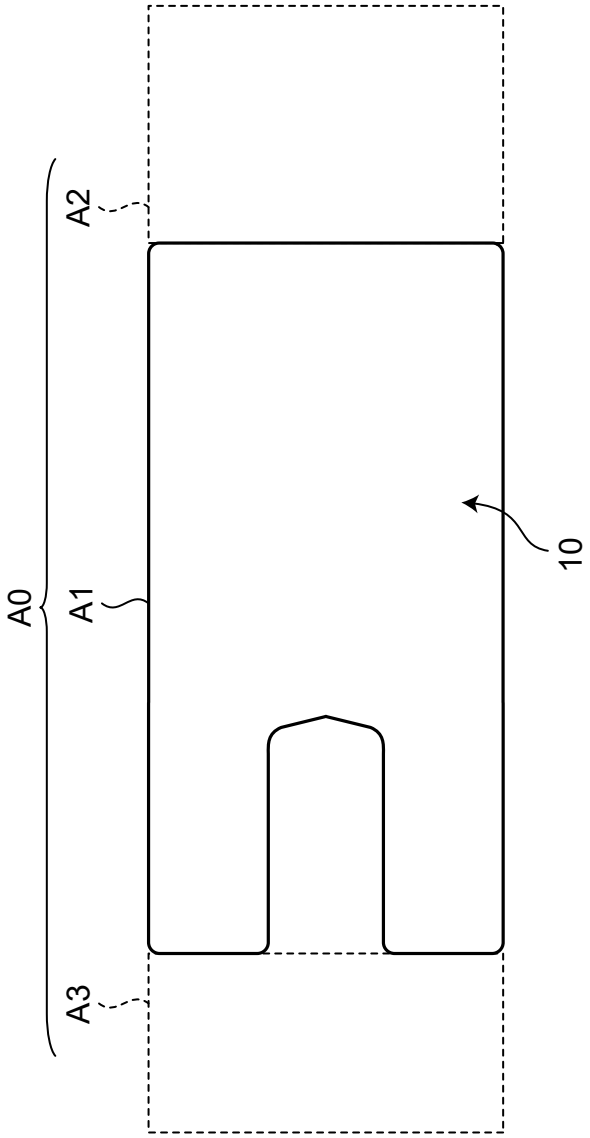

FIG.8

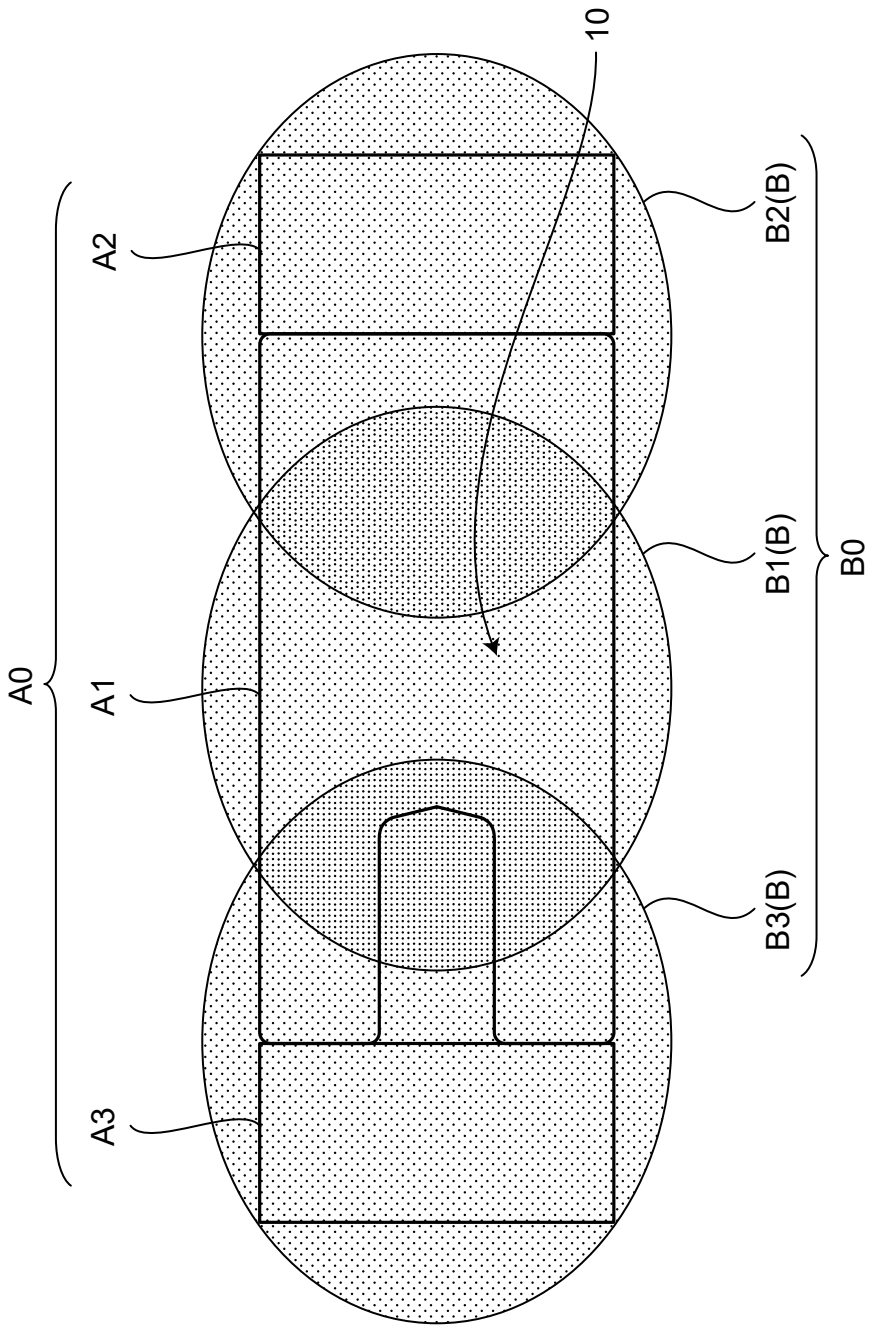

FIG.9

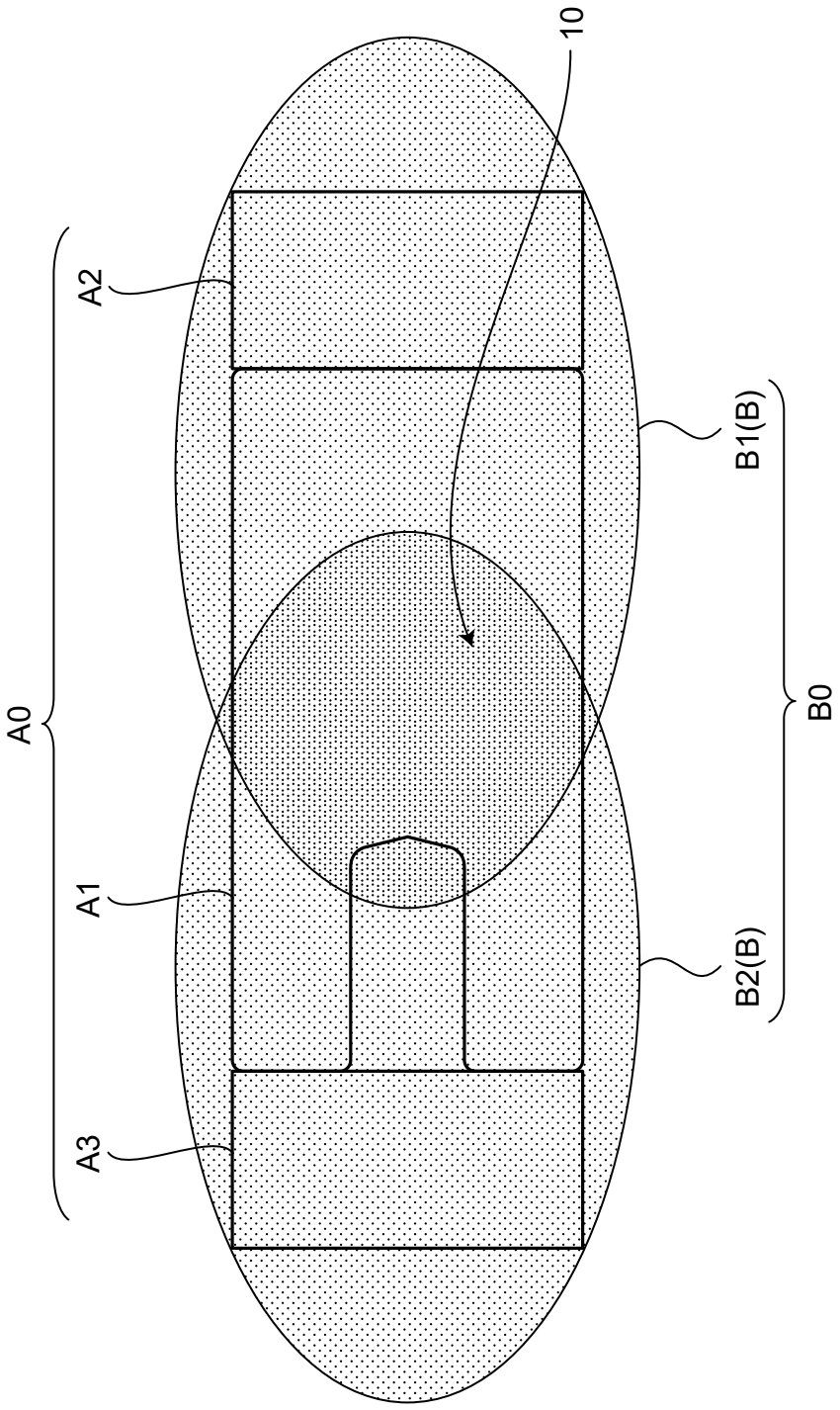

FIG.10

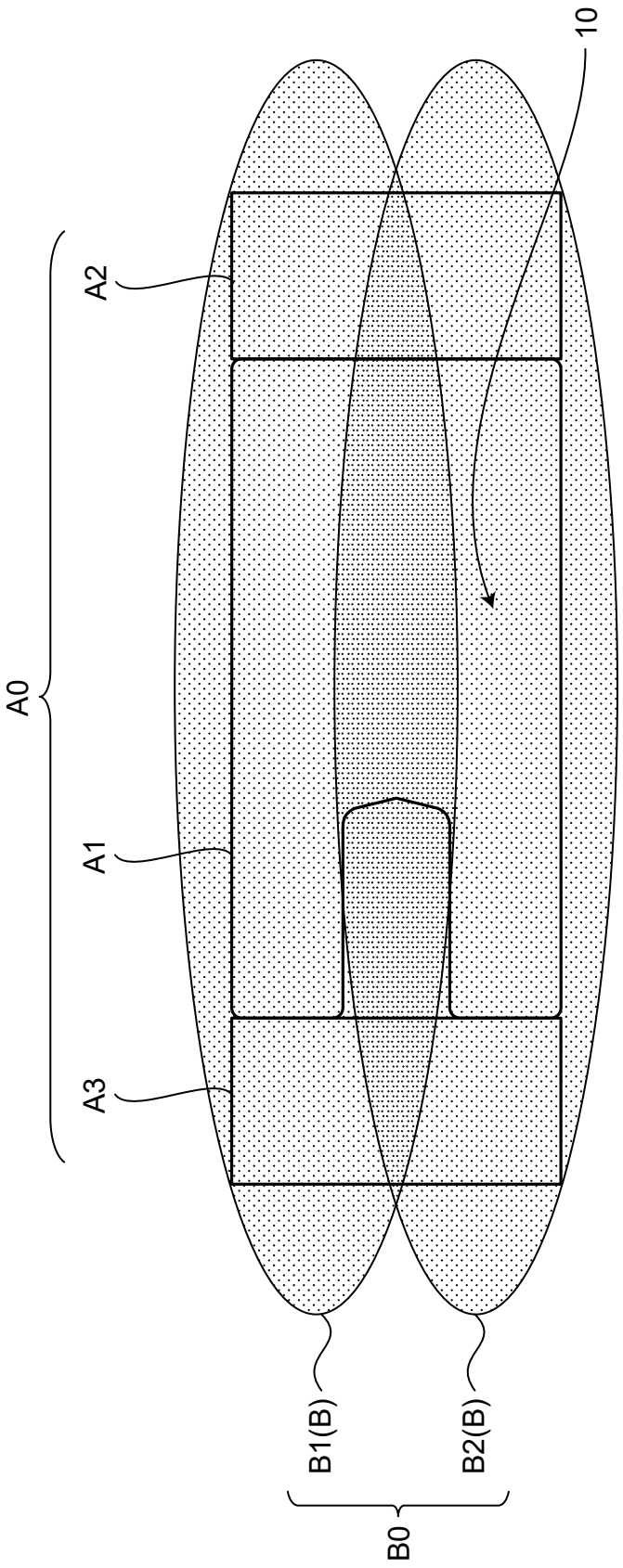

FIG.11

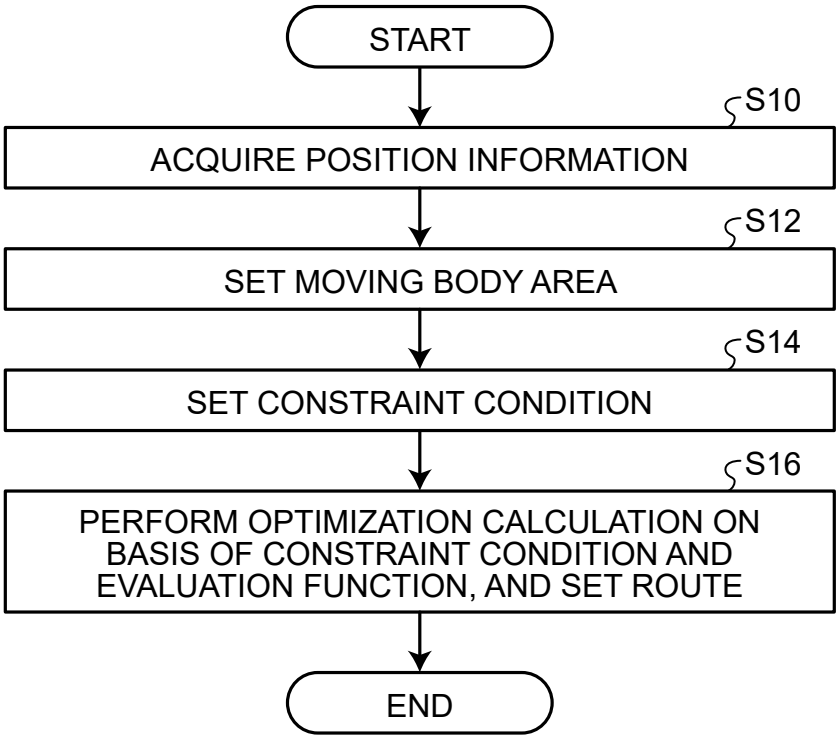
START
S10
ACQUIRE POSITION INFORMATION
S12
SET MOVING BODY AREA
S14
SET CONSTRAINT CONDITION
S16
PERFORM OPTIMIZATION CALCULATION ON BASIS OF CONSTRAINT CONDITION AND EVALUATION FUNCTION, AND SET ROUTE
END

FIG.12

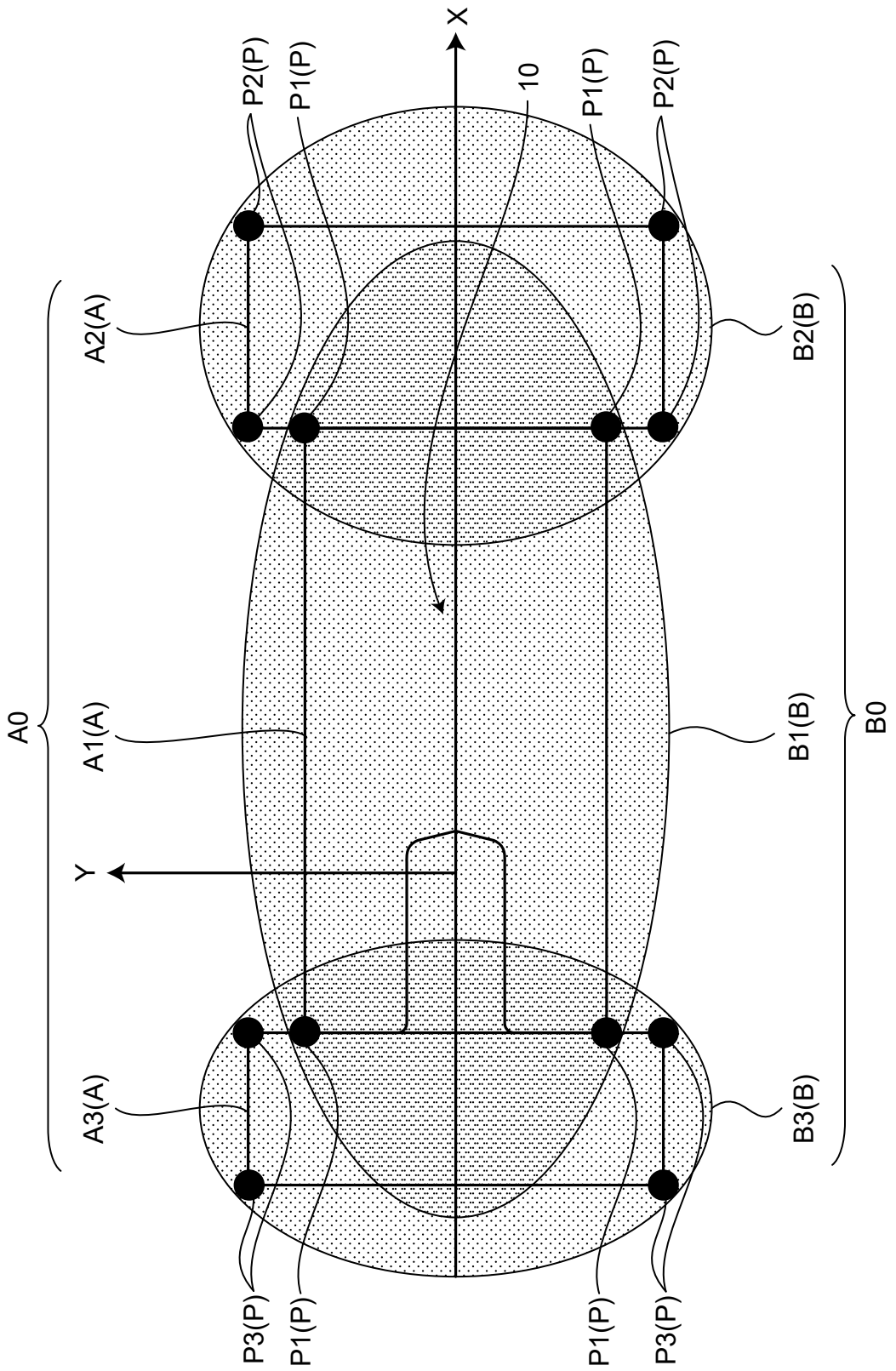
X
Y
10
P2(P)
P1(P)
P1(P)
P2(P)
A0
A2(A)
A1(A)
A3(A)
B2(B)
B1(B)
B3(B)
B0
P3(P)
P1(P)
P1(P)
P3(P)

FIG.13

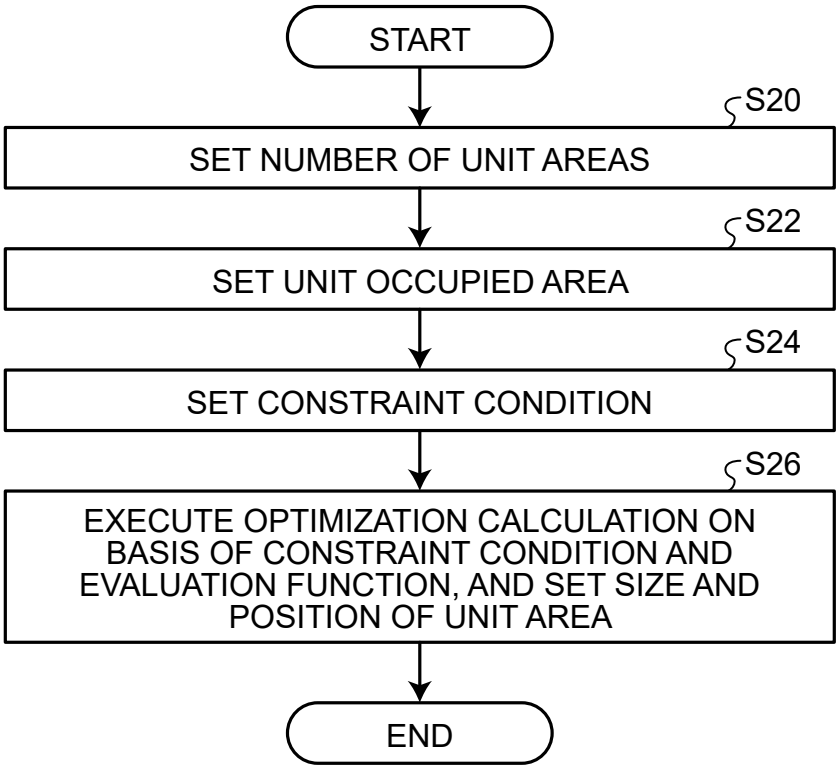
START
S20
SET NUMBER OF UNIT AREAS
S22
SET UNIT OCCUPIED AREA
S24
SET CONSTRAINT CONDITION
S26
EXECUTE OPTIMIZATION CALCULATION ON BASIS OF CONSTRAINT CONDITION AND EVALUATION FUNCTION, AND SET SIZE AND POSITION OF UNIT AREA
END

FIG.14

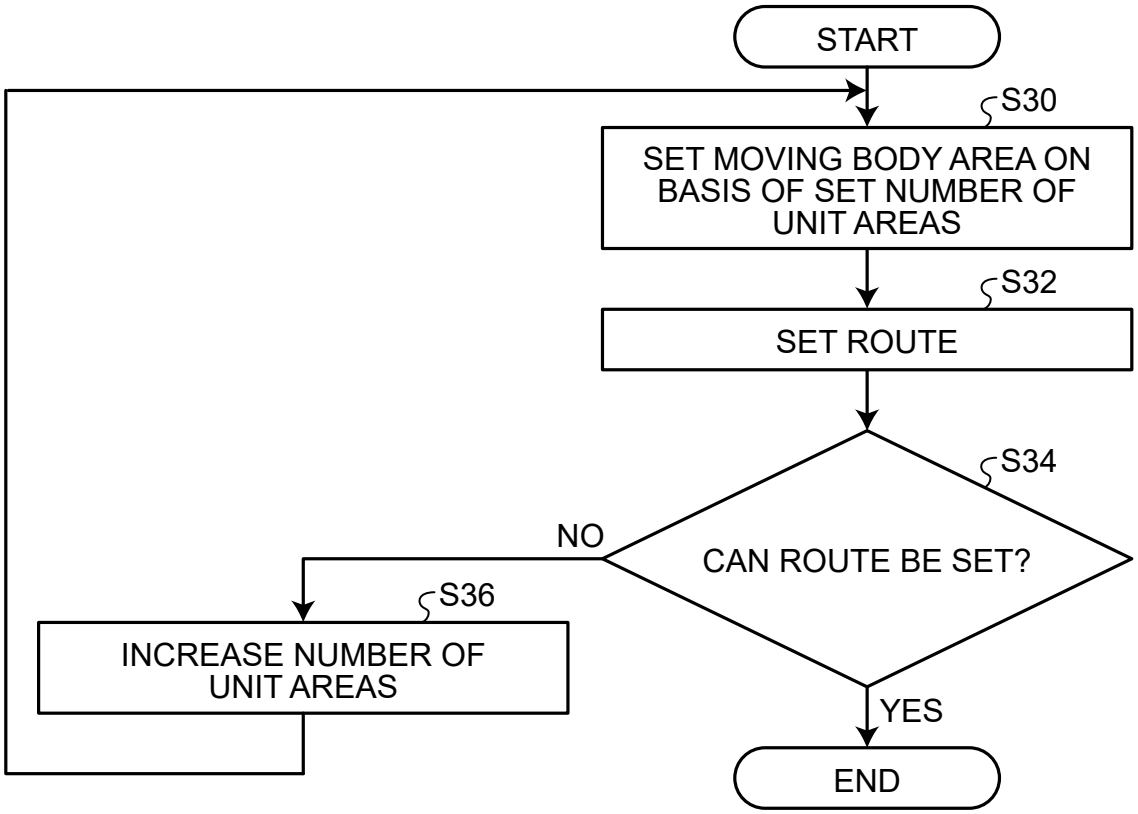
START
S30
SET MOVING BODY AREA ON BASIS OF SET NUMBER OF UNIT AREAS
S32
SET ROUTE
S34
CAN ROUTE BE SET?
NO
YES
S36
INCREASE NUMBER OF UNIT AREAS
END

FIG.15

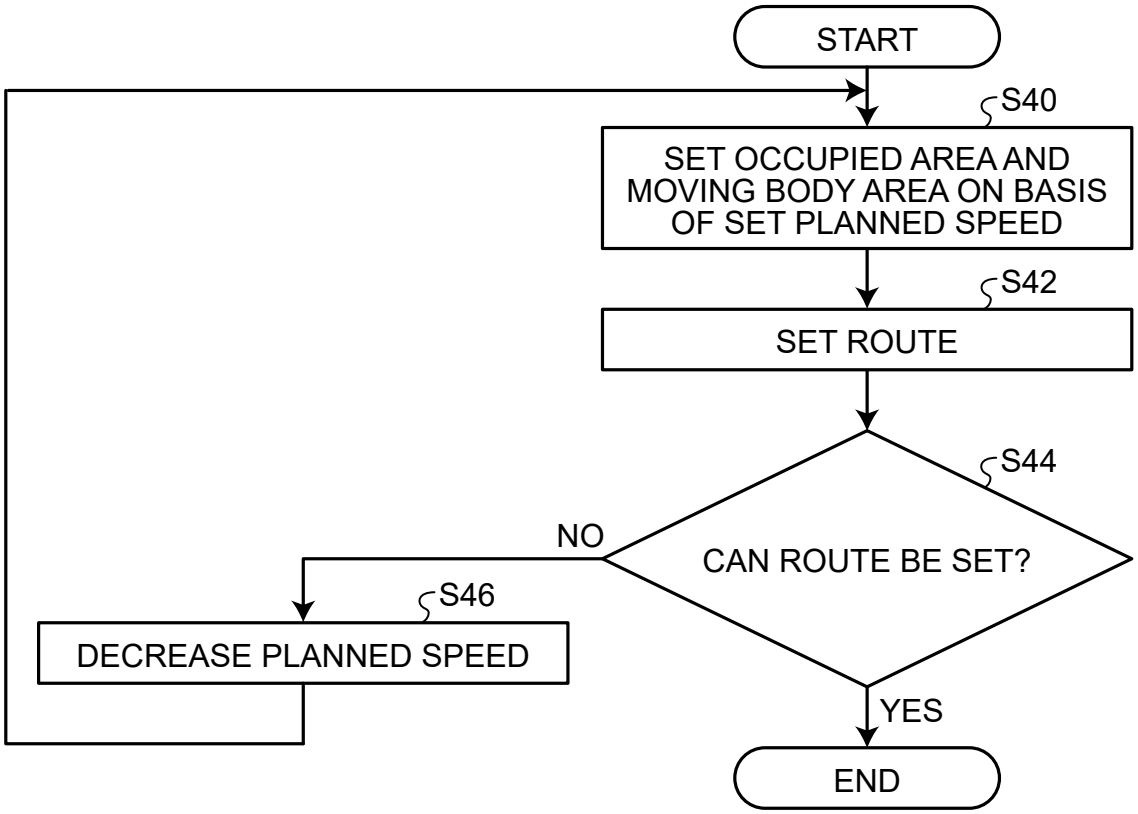
START
S40
SET OCCUPIED AREA AND MOVING BODY AREA ON BASIS OF SET PLANNED SPEED
S42
SET ROUTE
S44
CAN ROUTE BE SET?
NO
S46
DECREASE PLANNED SPEED
YES
END

FIG.16

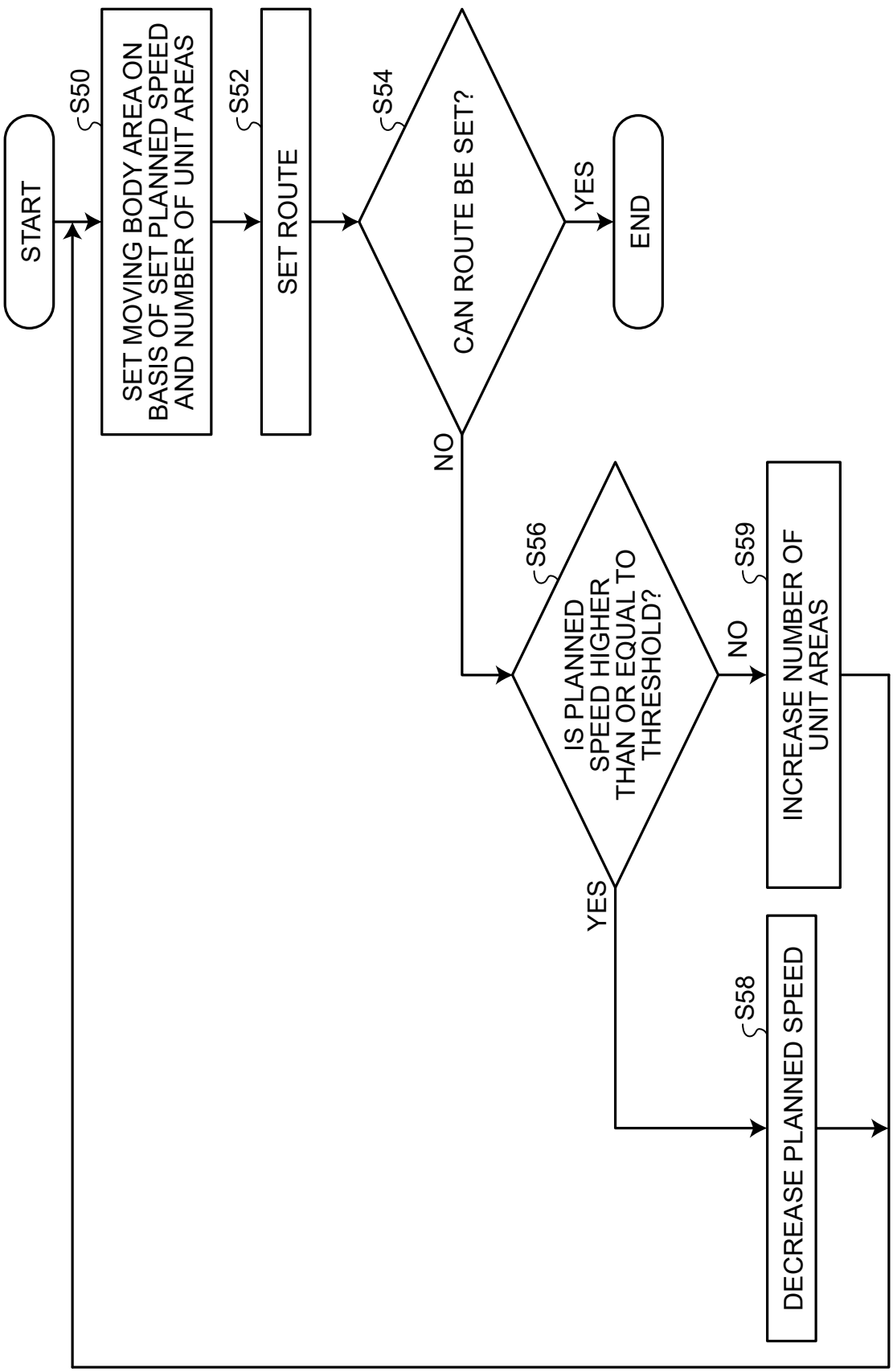
START
S50
SET MOVING BODY AREA ON BASIS OF SET PLANNED SPEED AND NUMBER OF UNIT AREAS
S52
SET ROUTE
S54
CAN ROUTE BE SET?
YES
END
NO
S56
IS PLANNED SPEED HIGHER THAN OR EQUAL TO THRESHOLD?
NO
S59
INCREASE NUMBER OF UNIT AREAS
YES
S58
DECREASE PLANNED SPEED

FIG.17

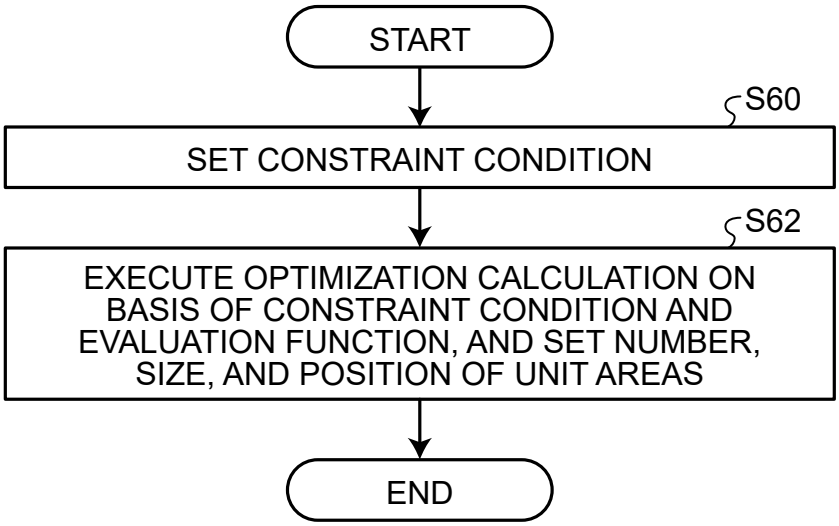
START
S60
SET CONSTRAINT CONDITION
S62
EXECUTE OPTIMIZATION CALCULATION ON BASIS OF CONSTRAINT CONDITION AND EVALUATION FUNCTION, AND SET NUMBER, SIZE, AND POSITION OF UNIT AREAS
END

FIG.18

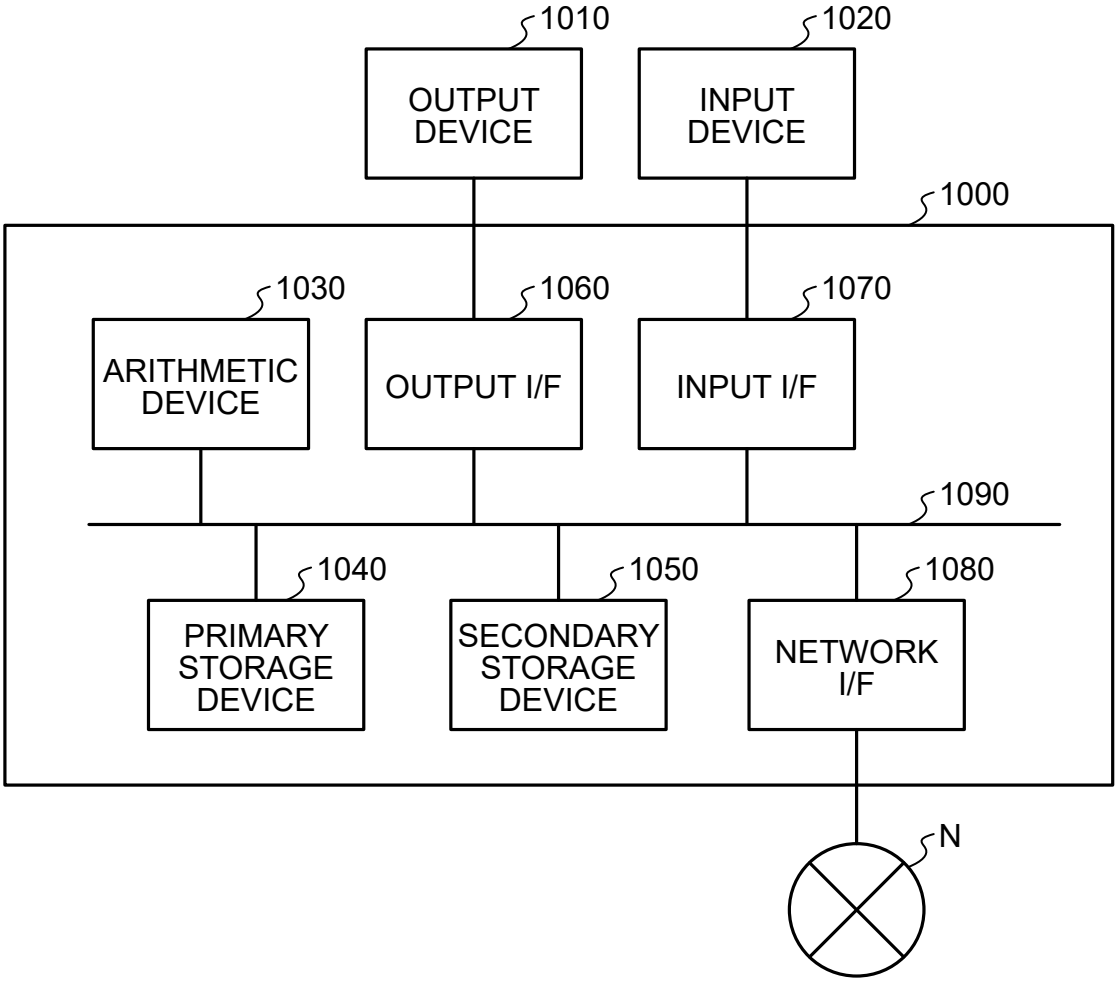
1010
1020
OUTPUT DEVICE
INPUT DEVICE
1000
1030
1060
1070
ARITHMETIC DEVICE
OUTPUT I/F
INPUT I/F
1090
1040
1050
1080
PRIMARY STORAGE DEVICE
SECONDARY STORAGE DEVICE
NETWORK I/F
N