(12) INTERNATIONAL APPLICATION PUBLISHED UNDER THE PATENT COOPERATION TREATY (PCT)

(19) World Intellectual Property Organization
International Bureau

(43) International Publication Date
18 May 2007 (18.05.2007)

PCT

(10) International Publication Number
WO 2007/056268 A1

(51) International Patent Classification:
H05K 3/12 (2006.01)

(21) International Application Number:
PCT/US2006/043166

(22) International Filing Date:
6 November 2006 (06.11.2006)

(25) Filing Language: English

(26) Publication Language: English

(30) Priority Data:
11/272,192 10 November 2005 (10.11.2005) US

(71) Applicant *(for all designated States except US)*: **SPEEDLINE TECHNOLOGIES, INC.** [US/US]; 16 Forge Park, Franklin, MA 02038 (US).

(72) Inventor; and

(75) Inventor/Applicant *(for US only)*: **PRINCE, David, P.** [US/US]; 3465 Post Road, Wakefield, RI 02879 (US).

(74) Agent: **NOE, Keith**; Lowrie, Lando & Anastasi, LLP, One Main Street, Suite 1100, Cambridge, MA 02142 (US).

(81) Designated States *(unless otherwise indicated, for every kind of national protection available)*: AE, AG, AL, AM, AT, AU, AZ, BA, BB, BG, BR, BW, BY, BZ, CA, CH, CN, CO, CR, CU, CZ, DE, DK, DM, DZ, EC, EE, EG, ES, FI, GB, GD, GE, GH, GM, GT, HN, HR, HU, ID, IL, IN, IS, JP, KE, KG, KM, KN, KP, KR, KZ, LA, LC, LK, LR, LS, LT, LU, LV, LY, MA, MD, MG, MK, MN, MW, MX, MY, MZ, NA, NG, NI, NO, NZ, OM, PG, PH, PL, PT, RO, RS, RU, SC, SD, SE, SG, SK, SL, SM, SV, SY, TJ, TM, TN, TR, TT, TZ, UA, UG, US, UZ, VC, VN, ZA, ZM, ZW.

(84) Designated States *(unless otherwise indicated, for every kind of regional protection available)*: ARIPO (BW, GH, GM, KE, LS, MW, MZ, NA, SD, SL, SZ, TZ, UG, ZM, ZW), Eurasian (AM, AZ, BY, KG, KZ, MD, RU, TJ, TM), European (AT, BE, BG, CH, CY, CZ, DE, DK, EE, ES, FI, FR, GB, GR, HU, IE, IS, IT, LT, LU, LV, MC, NL, PL, PT, RO, SE, SI, SK, TR), OAPI (BF, BJ, CF, CG, CI, CM, GA, GN, GQ, GW, ML, MR, NE, SN, TD, TG).

Published:
— *with international search report*

For two-letter codes and other abbreviations, refer to the "Guidance Notes on Codes and Abbreviations" appearing at the beginning of each regular issue of the PCT Gazette.

(54) **Title:** IMAGING SYSTEM AND METHOD FOR A STENCIL PRINTER

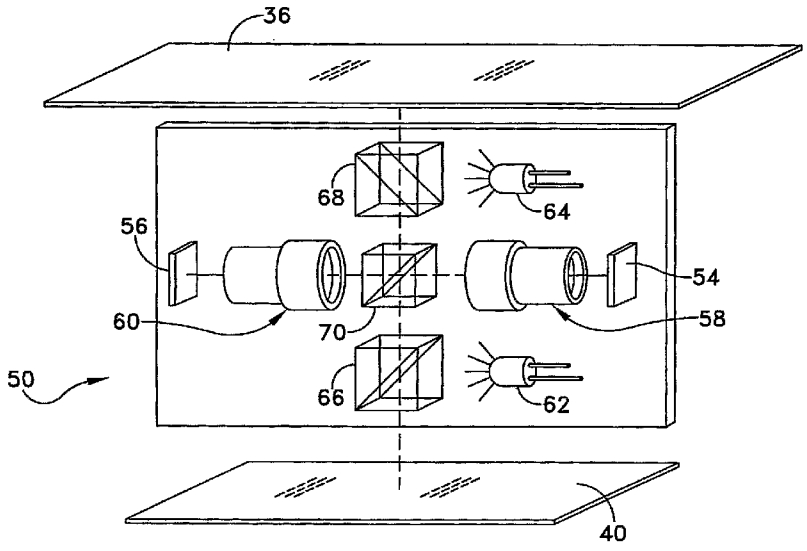

(57) **Abstract:** A stencil printer for depositing solder paste onto a plurality of pads of an electronic substrate includes a frame and a stencil coupled to the frame. The stencil has a plurality of apertures formed therein. The stencil printer further includes a support assembly coupled to the frame, the support assembly supporting the electronic substrate in a printing position. An imaging system is adapted to capture images of multiple areas of one of the electronic substrate and the stencil. A controller, coupled to the imaging system, is adapted to control movement of the imaging system to capture an image of an area while maintaining a minimum velocity above zero when capturing the image of the area. Methods for dispensing solder paste on a substrate and for inspecting the substrate are further disclosed.

WO 2007/056268 A1