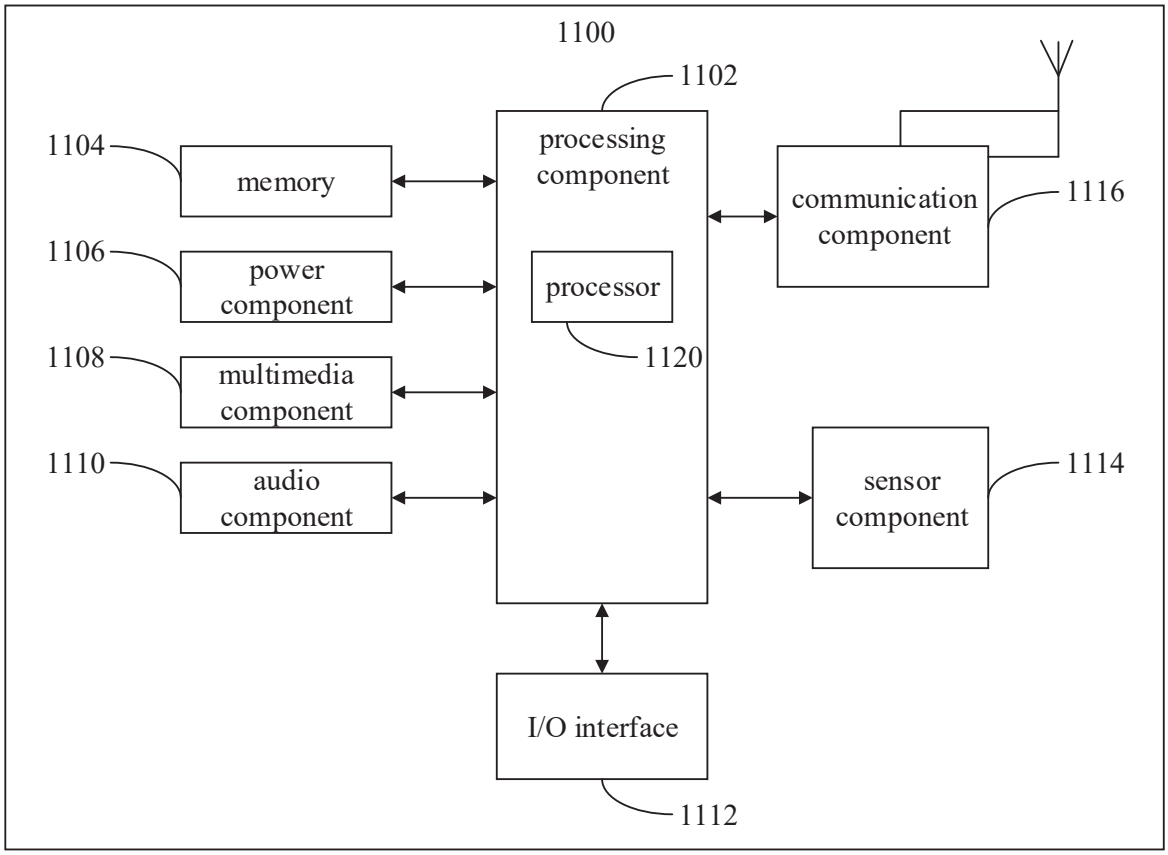
1100
1102
processing component
1104
memory
1106
power component
1108
multimedia component
1110
audio component
processor
1120
communication component
1116
sensor component
1114
I/O interface
1112

FIG. 11

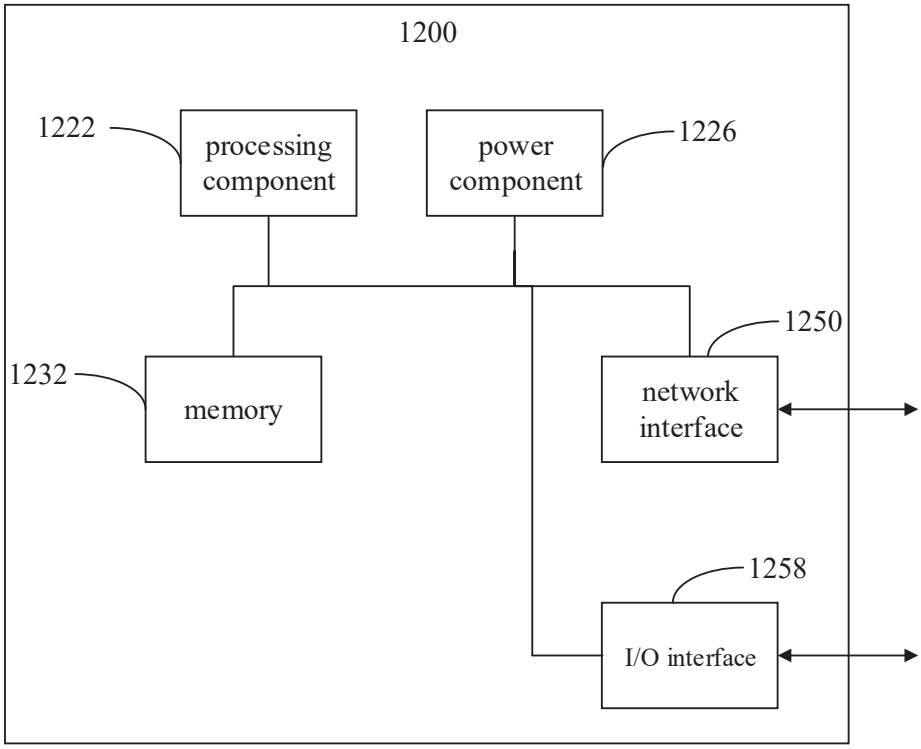
1200
1222
processing component
power component
1226
1250
1232
memory
network interface
1258
I/O interface

FIG. 12