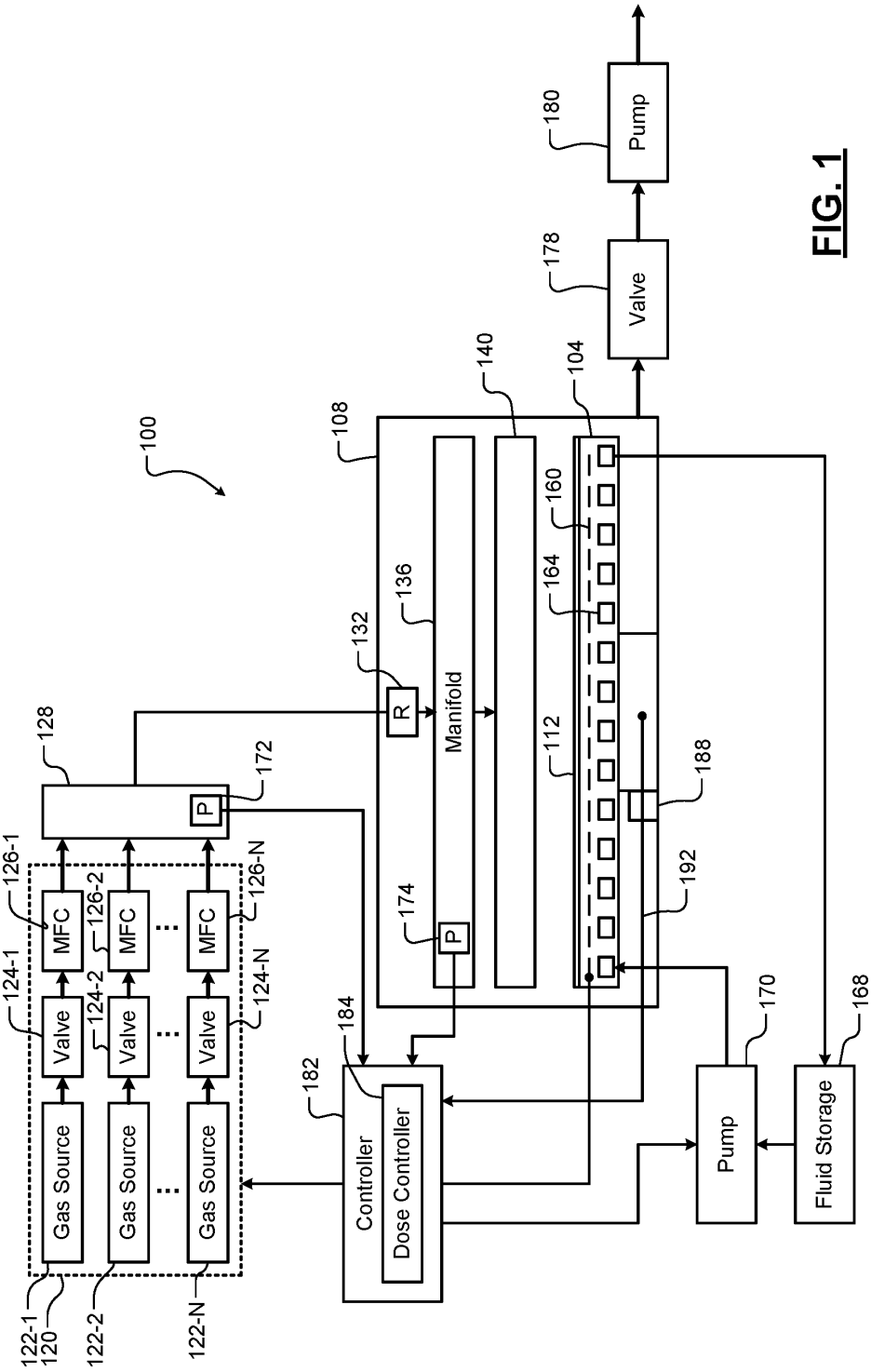
100
108
140
104
180
Pump
178
Valve
160
164
136
132
R
Manifold
112
188
128
172
P
126-1
126-2
126-N
MFC
MFC
MFC
124-1
124-2
124-N
Valve
Valve
Valve
174
P
192
184
182
Gas Source
Gas Source
Gas Source
Controller
Dose Controller
170
168
Pump
Fluid Storage
122-1
120
122-2
122-N

FIG. 1

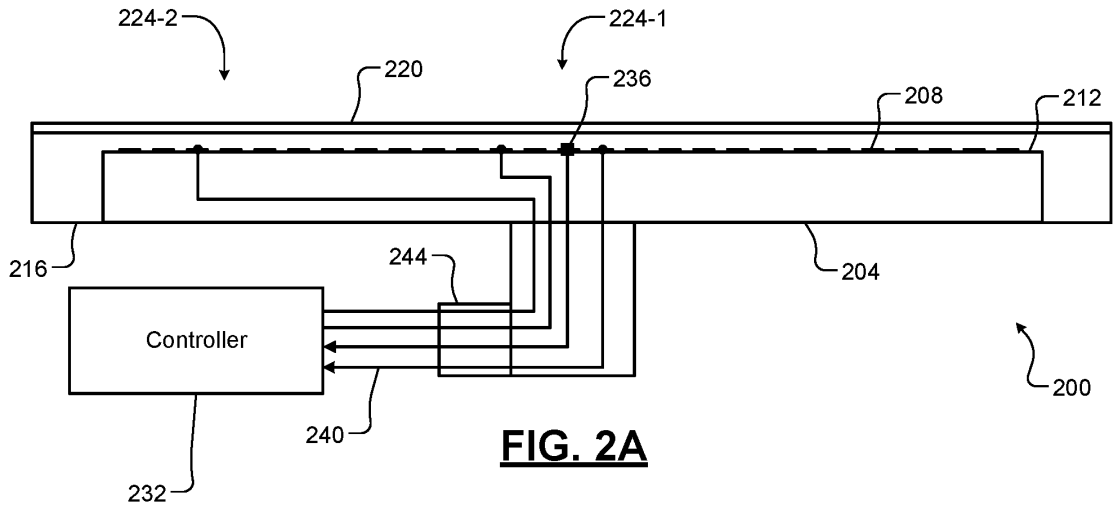
224-2
224-1
220
236
208
212
216
244
204
Controller
200
240
232

FIG. 2A

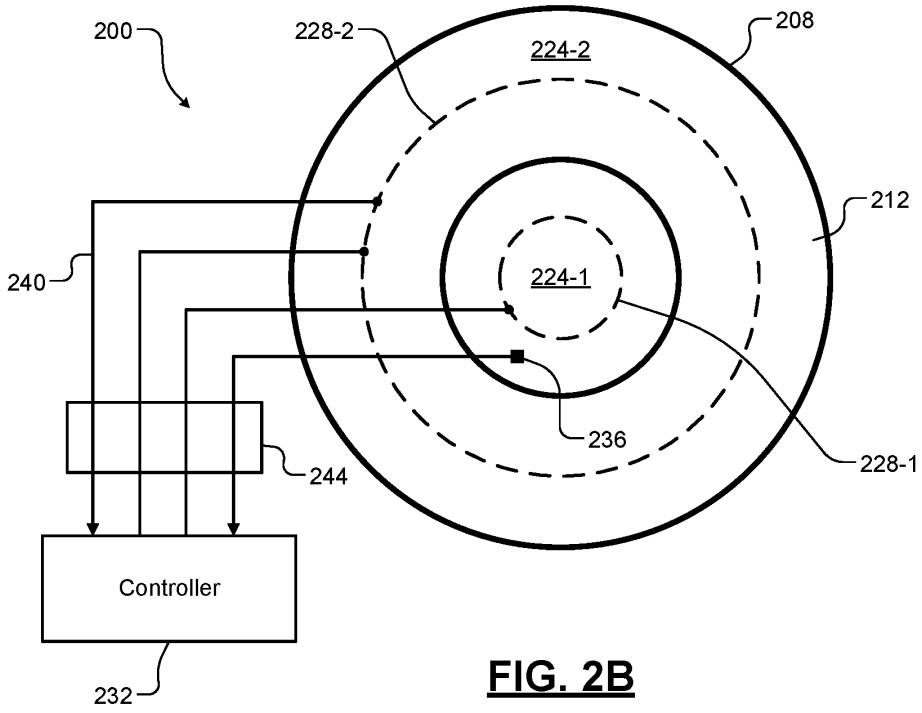
200
228-2
208
224-2
212
240
224-1
236
228-1
244
Controller
232

FIG. 2B

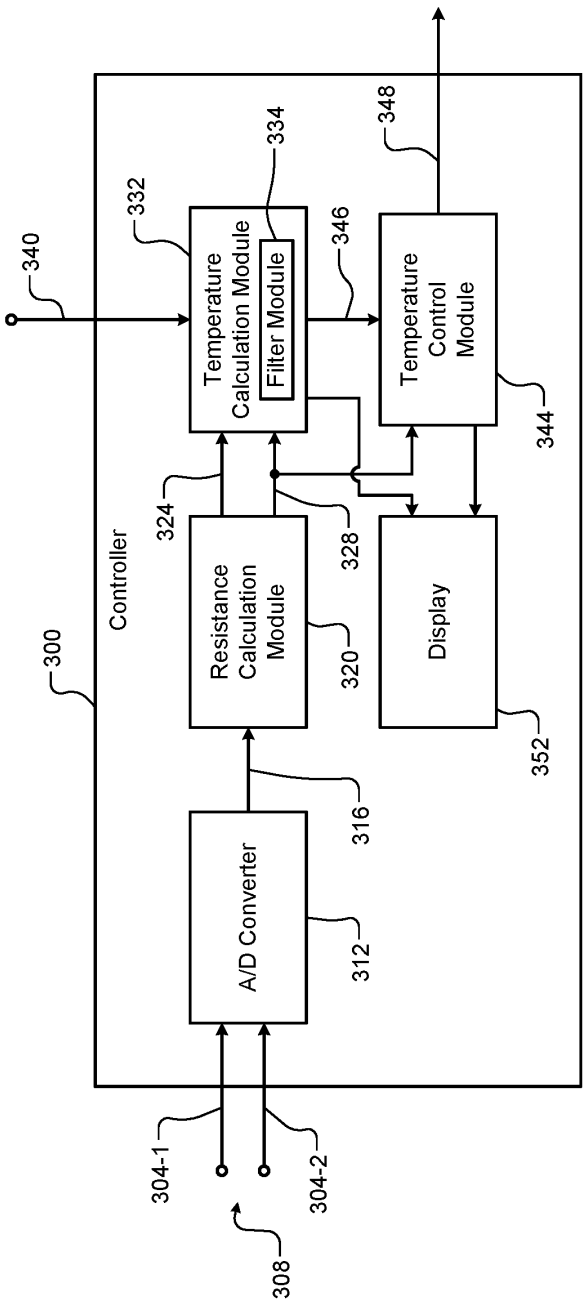
300
Controller
340
332
Temperature Calculation Module
Filter Module
334
346
348
Temperature Control Module
344
324
328
Resistance Calculation Module
320
Display
352
316
A/D Converter
312
304-1
304-2
308

FIG. 3

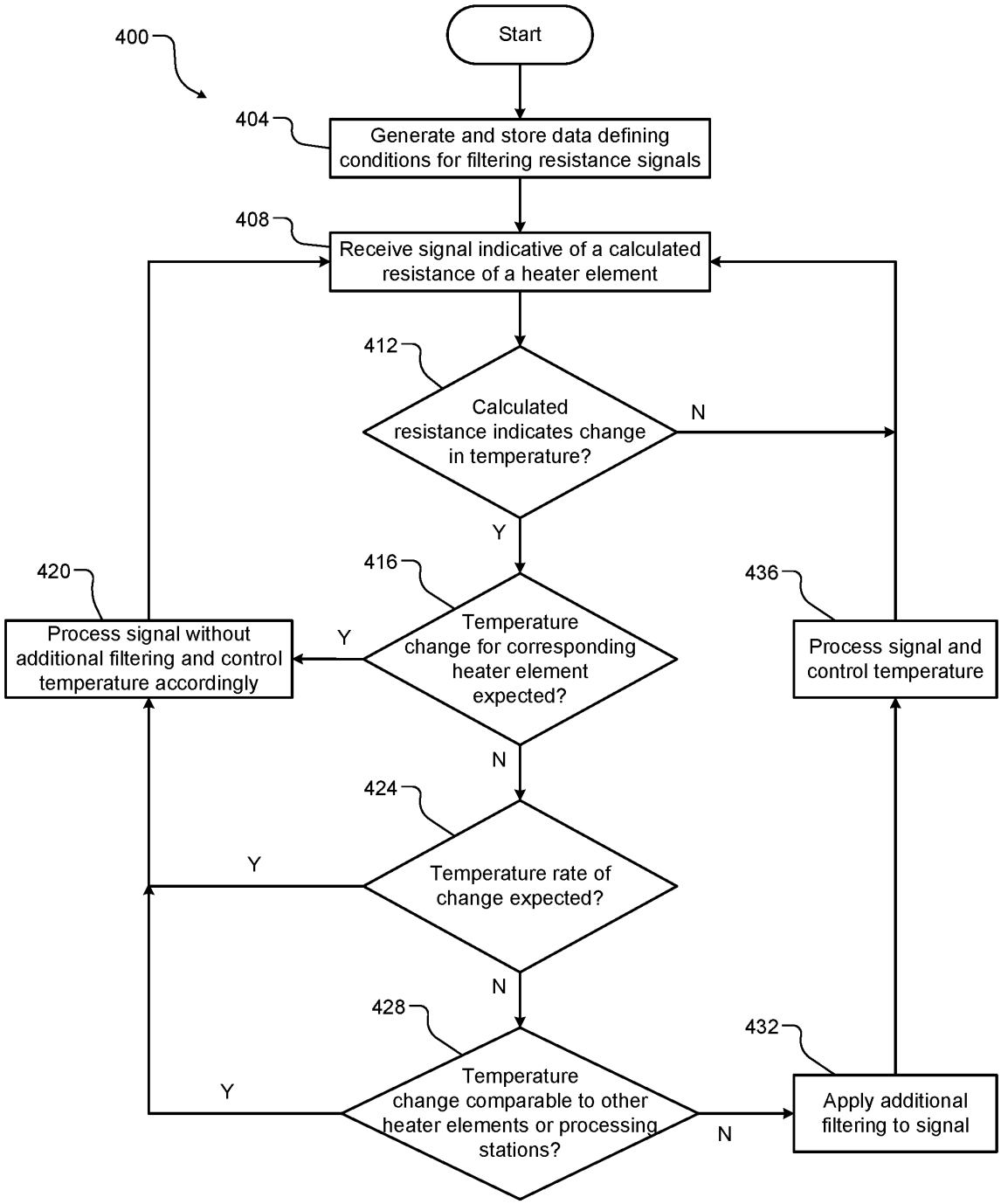
400
Start
404
Generate and store data defining conditions for filtering resistance signals
408
Receive signal indicative of a calculated resistance of a heater element
412
Calculated resistance indicates change in temperature?
N
Y
416
Temperature change for corresponding heater element expected?
Y
420
Process signal without additional filtering and control temperature
N
424
Temperature rate of change expected?
Y
N
428
Temperature change comparable to other heater elements or processing stations?
Y
N
432
Apply additional filtering to signal
436
Process signal and control temperature

FIG. 4