(12) INTERNATIONAL APPLICATION PUBLISHED UNDER THE PATENT COOPERATION TREATY (PCT)

(19) World Intellectual Property Organization
International Bureau

(43) International Publication Date
19 February 2004 (19.02.2004)

PCT

(10) International Publication Number
WO 2004/015357 A2

(51) International Patent Classification[7]: F41G

(21) International Application Number:
PCT/US2003/023316

(22) International Filing Date: 24 July 2003 (24.07.2003)

(25) Filing Language: English

(26) Publication Language: English

(30) Priority Data:
60/402,464 9 August 2002 (09.08.2002) US

(71) Applicant: **FATS, INC.** [US/US]; 7340 McGinnis Ferry Road, Suwanee, GA 30024 (US).

(72) Inventors: **METCALFE, Corey, Howard**; 2831 Blarney Way, Duluth, GA 30024 (US). **WILSON, Henry, Martin, Jr.**; 2070 Skylar Leigh Drive, Buford, GA 30518 (US). **FLEMING, Paul, Heath**; 5707 Manuel Place, Sugarhill, GA 30518 (US).

(74) Agent: **HOLLAND, Christopher, A.**; Smith, Gambrell & Russell, LLP, Suite 3100, 1230 Peachtree Street, N.E., Promenade II, Atlanta, GA 30309-3592 (US).

(81) Designated States *(national)*: AE, AG, AL, AM, AT, AU, AZ, BA, BB, BG, BR, BY, BZ, CA, CH, CN, CO, CR, CU, CZ, DE, DK, DM, DZ, EC, EE, ES, FI, GB, GD, GE, GH, GM, HR, HU, ID, IL, IN, IS, JP, KE, KG, KP, KR, KZ, LC, LK, LR, LS, LT, LU, LV, MA, MD, MG, MK, MN, MW, MX, MZ, NI, NO, NZ, OM, PG, PH, PL, PT, RO, RU, SC, SD, SE, SG, SK, SL, SY, TJ, TM, TN, TR, TT, TZ, UA, UG, UZ, VC, VN, YU, ZA, ZM, ZW.

(84) Designated States *(regional)*: ARIPO patent (GH, GM, KE, LS, MW, MZ, SD, SL, SZ, TZ, UG, ZM, ZW), Eurasian patent (AM, AZ, BY, KG, KZ, MD, RU, TJ, TM), European patent (AT, BE, BG, CH, CY, CZ, DE, DK, EE, ES, FI, FR, GB, GR, HU, IE, IT, LU, MC, NL, PT, RO, SE, SI, SK, TR), OAPI patent (BF, BJ, CF, CG, CI, CM, GA, GN, GQ, GW, ML, MR, NE, SN, TD, TG).

Published:
— *without international search report and to be republished upon receipt of that report*

[Continued on next page]

(54) Title: GAS OPERATING SYSTEM FOR FIREARM SIMULATORS

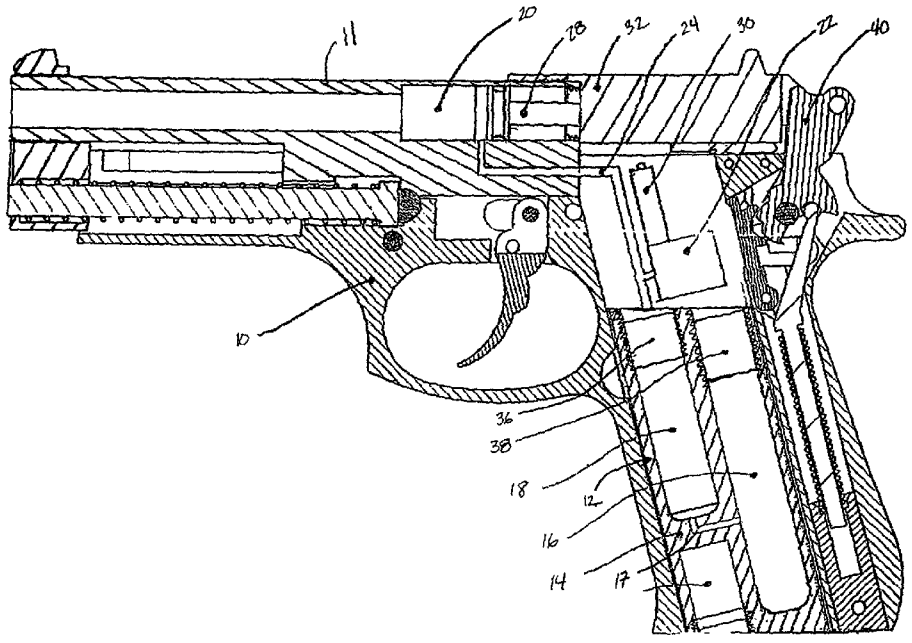

(57) Abstract: A removable gas supply (12) for a weapon simulator (10), wherein the gas system cycles the bolt (32) or slide (32) of the simulator (10) to provide recoil, actuate a hammer/trigger mechanism (34) and provide realism of the original weapon functions. The weapon simulator (10) has a housing (11) defining a piston chamber (59) and a piston (58) positioned in said chamber and connected to the bolt (32). The simulator (10) also includes a valve chamber (47) in the housing (11) connected with said regulated gas supply (12) and said bolt (32), and a recoil valve (46) positioned in the valve chamber (47) to control the release of gas from said regulated gas supply (12) to said piston chamber (59) to generate recoil in the weapon simulator (10).

WO 2004/015357 A2

For two-letter codes and other abbreviations, refer to the "Guidance Notes on Codes and Abbreviations" appearing at the beginning of each regular issue of the PCT Gazette.