FIG. 1A

VEHICLE WIDTH

FEATURE POINT FOR
MEASURING DIMENSION
#1: SIDE SURFACE 31 (ON CAMERA SIDE)
#2: SIDE SURFACE 32
(ON OPPOSITE SIDE FROM CAMERA)
#3: BOTTOM SURFACE 33

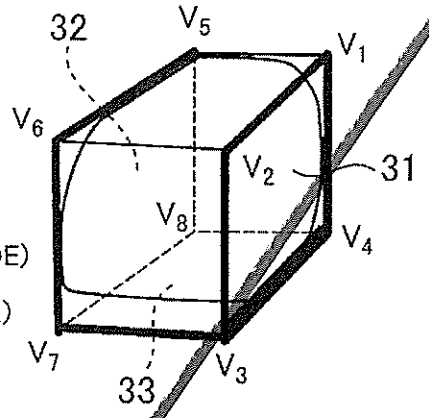

FIG. 1B

VEHICLE LENGTH

FEATURE POINT FOR
MEASURING DIMENSION
#3: BOTTOM SURFACE 33
#4: FRONT SURFACE 34
#5: REAR SURFACE 35

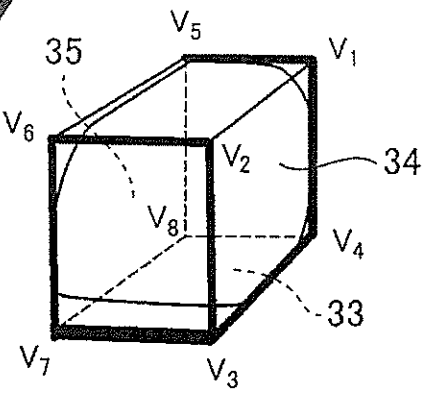

FIG. 1C

VEHICLE WIDTH

FEATURE POINT FOR
MEASURING DIMENSION
#3: BOTTOM SURFACE 33
#6: UPPER SURFACE 36

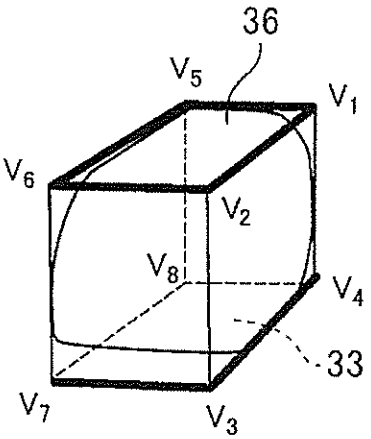

FIG. 8A

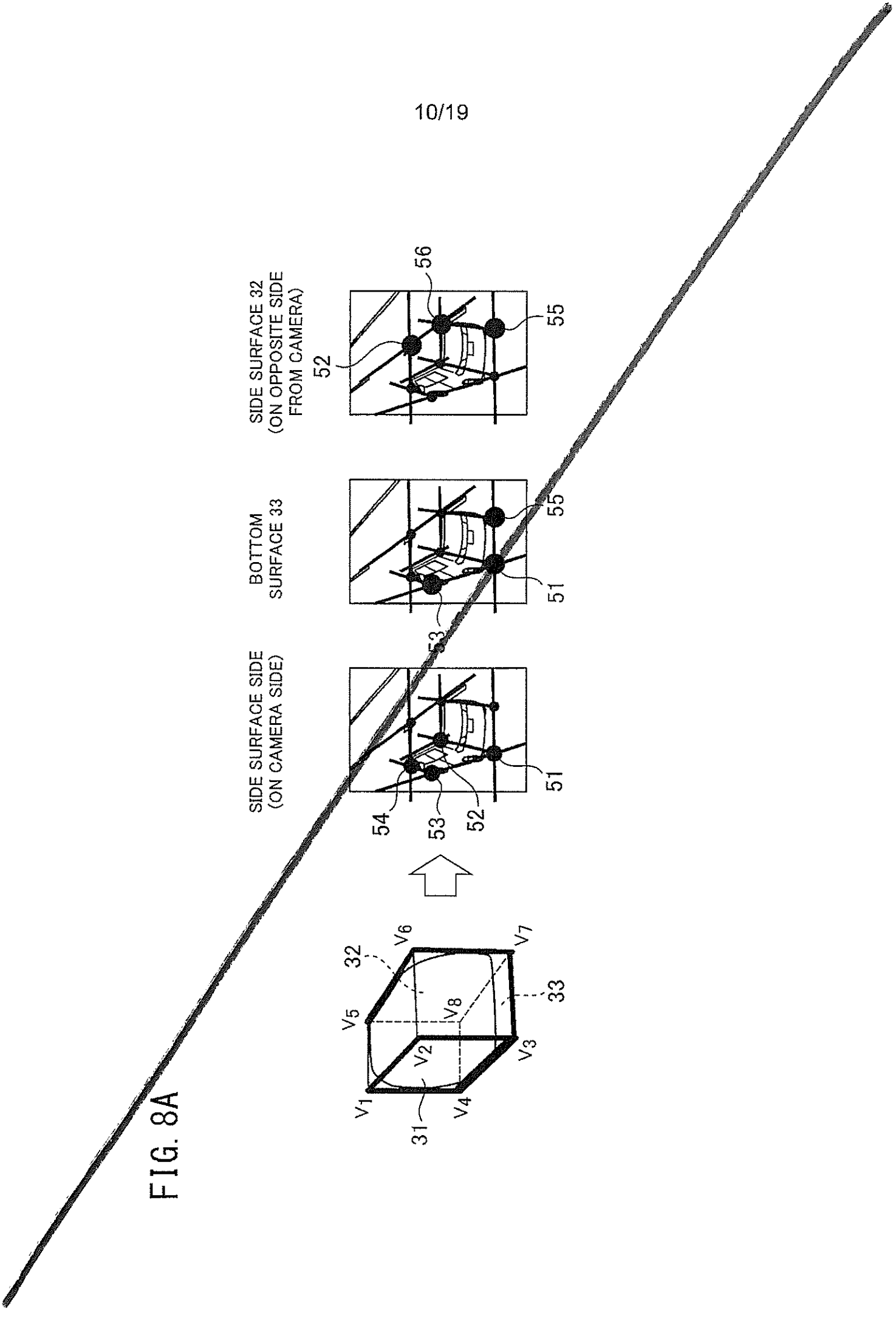
SIDE SURFACE SIDE
(ON CAMERA SIDE)
BOTTOM
SURFACE 33
SIDE SURFACE 32
(ON OPPOSITE SIDE
FROM CAMERA)
51
52
53
54
55
56
31
32
33
V1
V2
V3
V4
V5
V6
V7
V8

FIG. 10

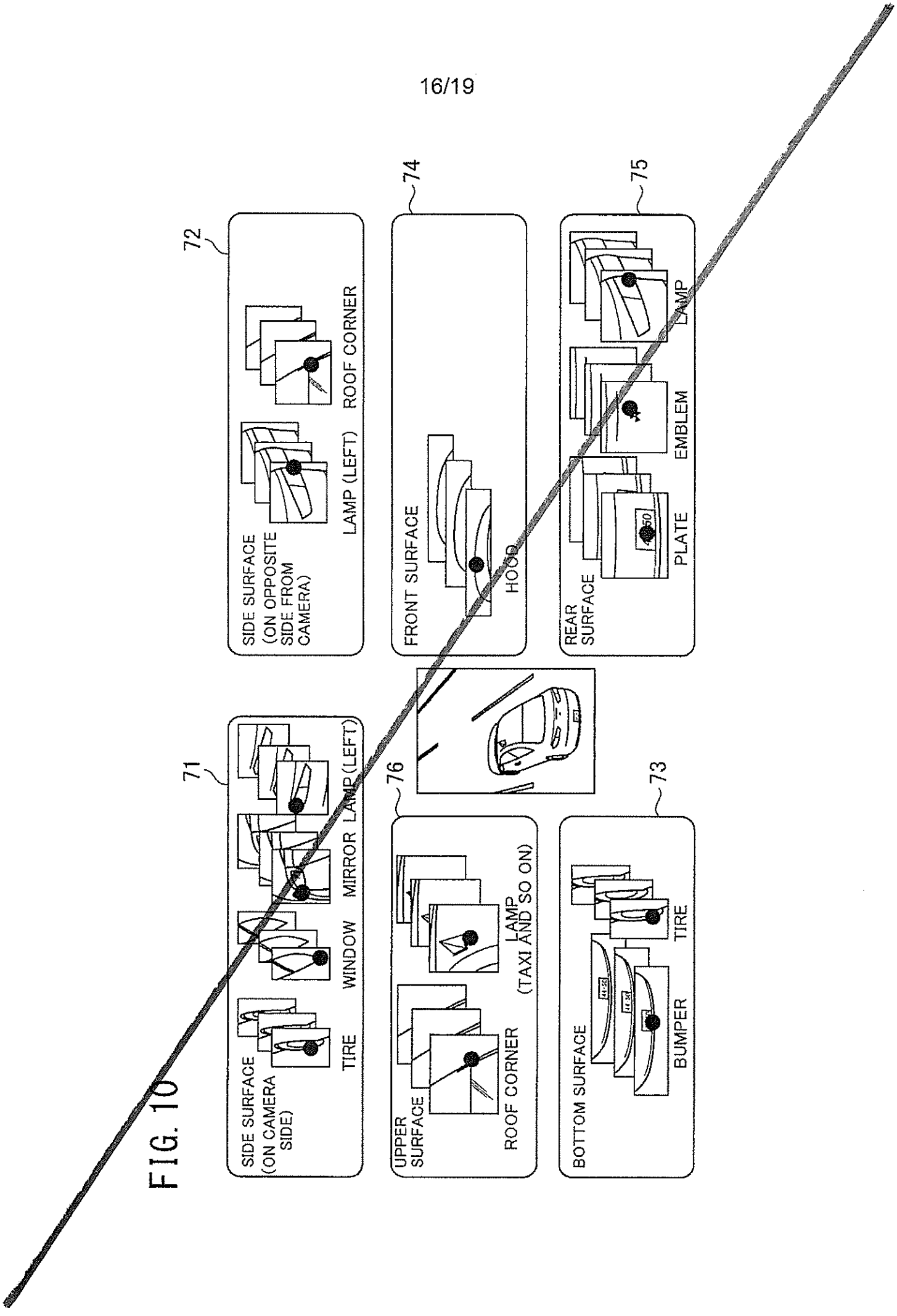
71
SIDE SURFACE (ON CAMERA SIDE)
TIRE
WINDOW
MIRROR
LAMP (LEFT)
72
SIDE SURFACE (ON OPPOSITE SIDE FROM CAMERA)
LAMP (LEFT)
ROOF CORNER
73
BOTTOM SURFACE
BUMPER
TIRE
74
FRONT SURFACE
HOOD
75
REAR SURFACE
PLATE
EMBLEM
LAMP
76
UPPER SURFACE
ROOF CORNER
LAMP (TAXI AND SO ON)

FIG. 1A

VEHICLE WIDTH

FEATURE POINT FOR
MEASURING DIMENSION
#1 : SIDE SURFACE 31 (ON CAMERA SIDE)
#2 : SIDE SURFACE 32
(ON OPPOSITE SIDE FROM CAMERA)
#3 : BOTTOM SURFACE 33

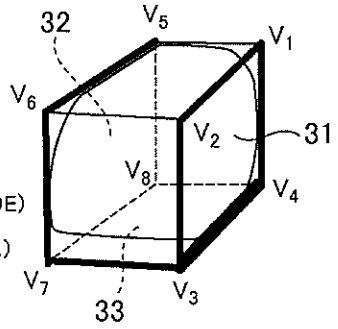

FIG. 1B

VEHICLE LENGTH

FEATURE POINT FOR
MEASURING DIMENSION
#3 : BOTTOM SURFACE 33
#4 : FRONT SURFACE 34
#5 : REAR SURFACE 35

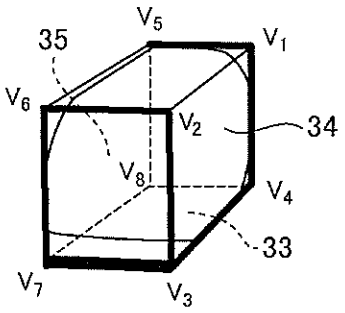

FIG. 1C

VEHICLE HEIGHT

FEATURE POINT FOR
MEASURING DIMENSION
#3 : BOTTOM SURFACE 33
#6 : UPPER SURFACE 36

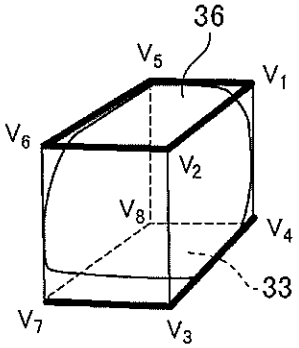

FIG. 8A

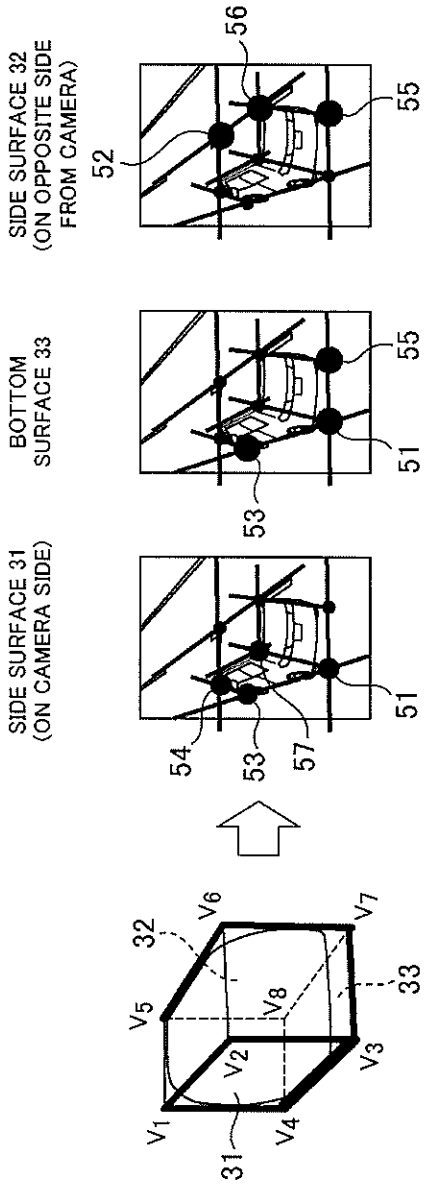
SIDE SURFACE 31
(ON CAMERA SIDE)
BOTTOM
SURFACE 33
SIDE SURFACE 32
(ON OPPOSITE SIDE
FROM CAMERA)
V1
V2
V3
V4
V5
V6
V7
V8
31
32
33
51
52
53
54
55
56
57

FIG. 10

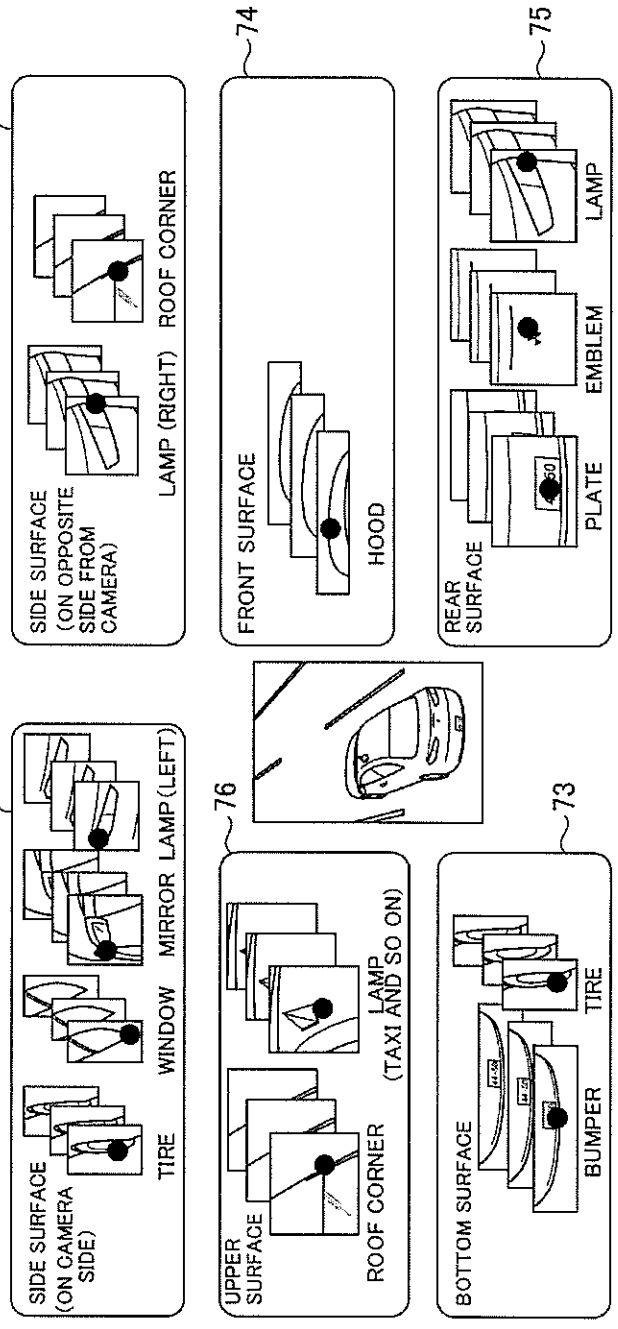
71
SIDE SURFACE (ON CAMERA SIDE)
TIRE
WINDOW
MIRROR
LAMP (LEFT)
72
SIDE SURFACE (ON OPPOSITE SIDE FROM CAMERA)
LAMP (RIGHT)
ROOF CORNER
73
BOTTOM SURFACE
BUMPER
TIRE
74
FRONT SURFACE
HOOD
75
REAR SURFACE
PLATE
EMBLEM
LAMP
76
UPPER SURFACE
ROOF CORNER
LAMP (TAXI AND SO ON)