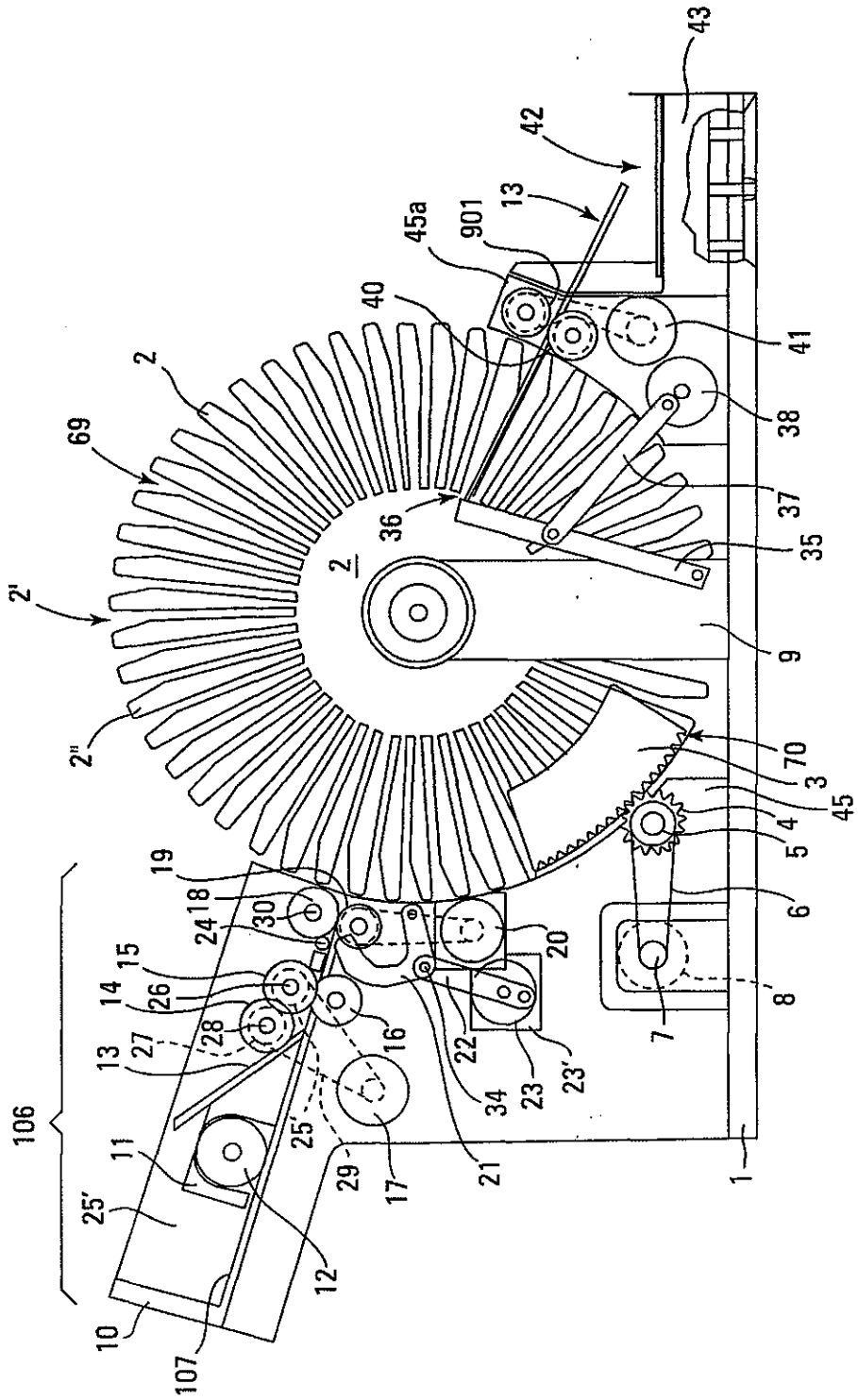
43
42
13
901
45a
40
41
38
37
35
36
2
69
2'
2"
9
70
3
45
4
5
6
7
8
1
19
18
30
24
20
15
14
26
28
27
13
16
22
23
23'
34
21
17
29
25'
11
12
10
107
106

Fig. 1

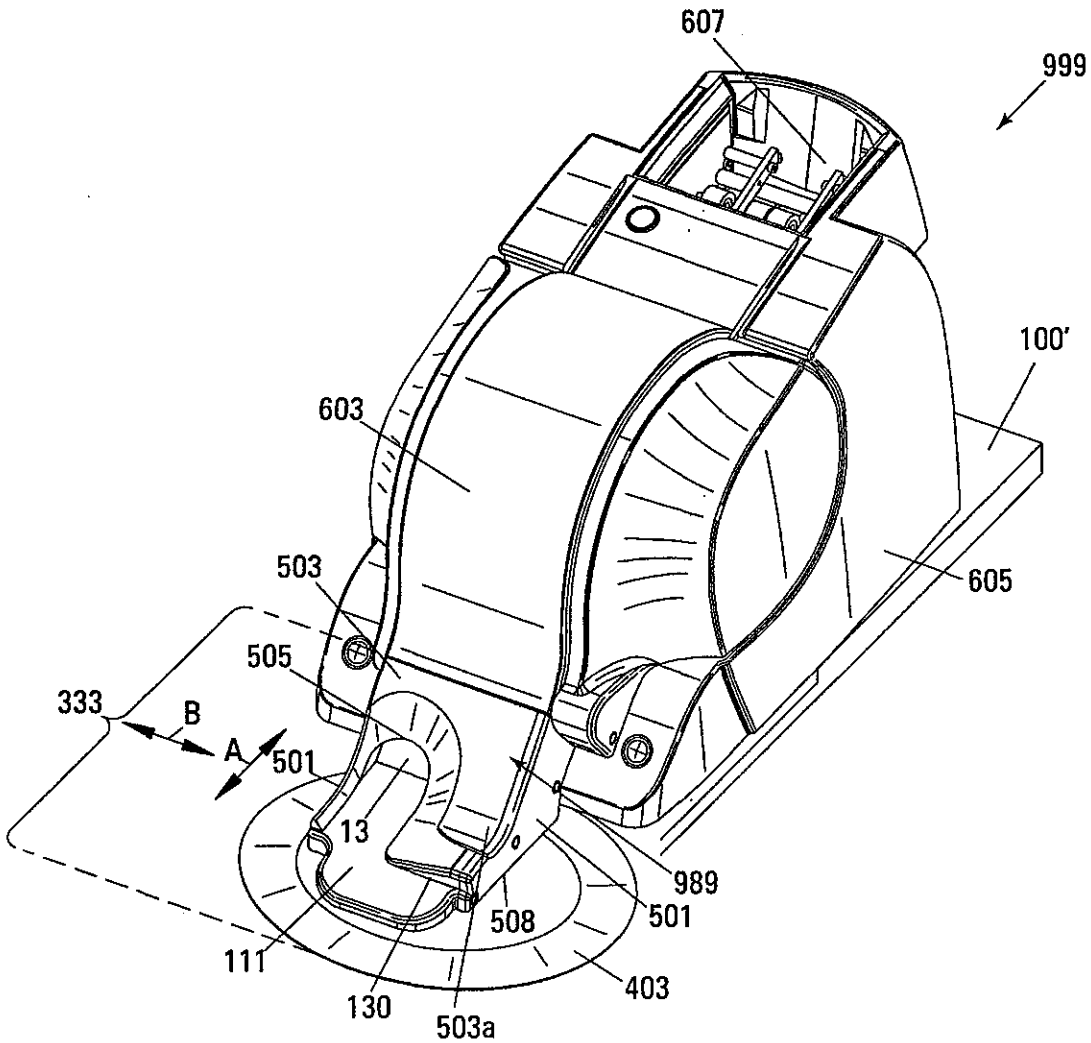
607
999
100'
603
503
605
505
333
B
A
501
13
989
508
501
111
403
130
503a

Fig. 2

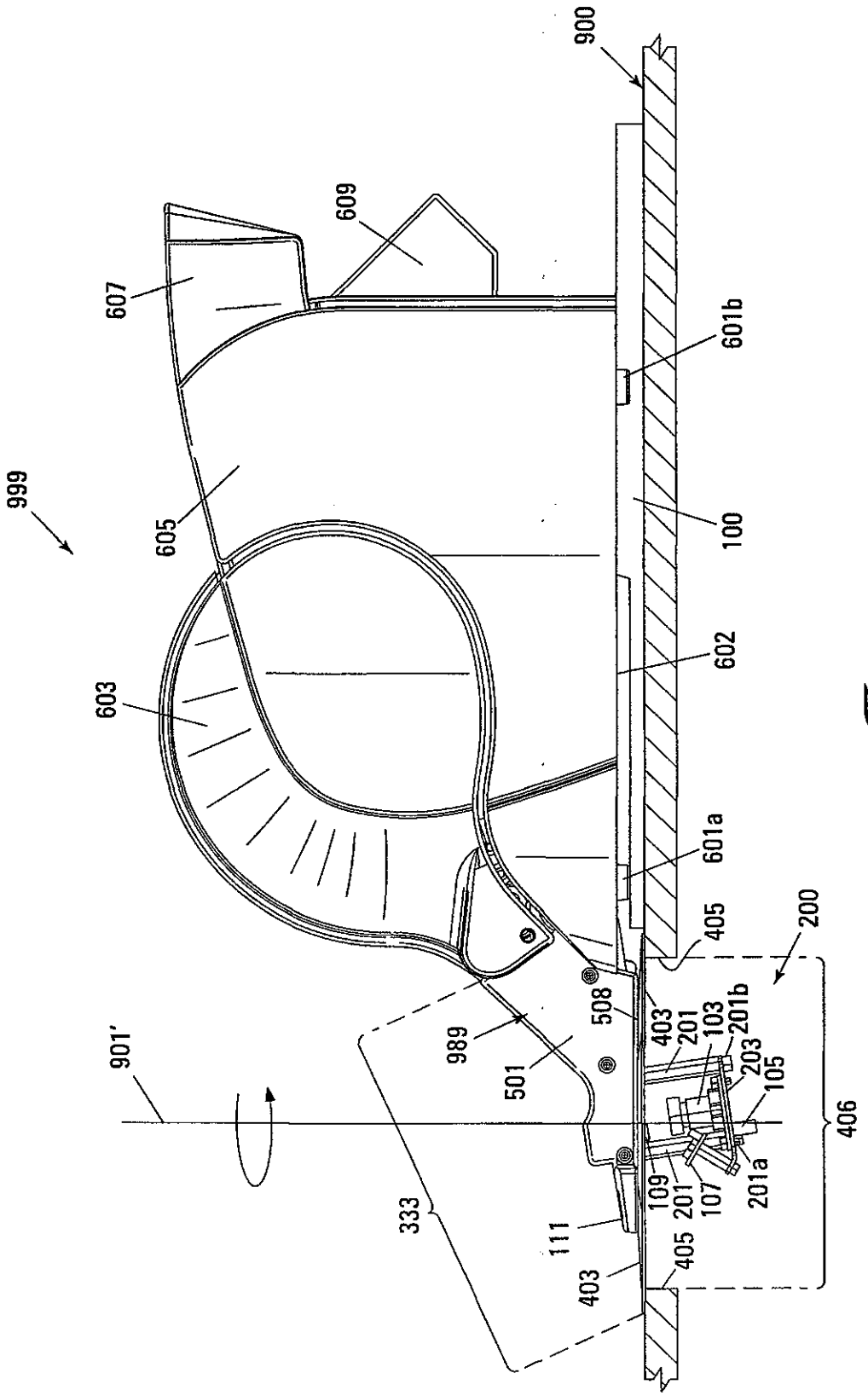
900
609
607
601b
999
605
100
603
602
601a
405
200
508
403
201
103
201b
989
203
105
901'
501
406
109
201
107
201a
333
111
405
403

Fig. 3

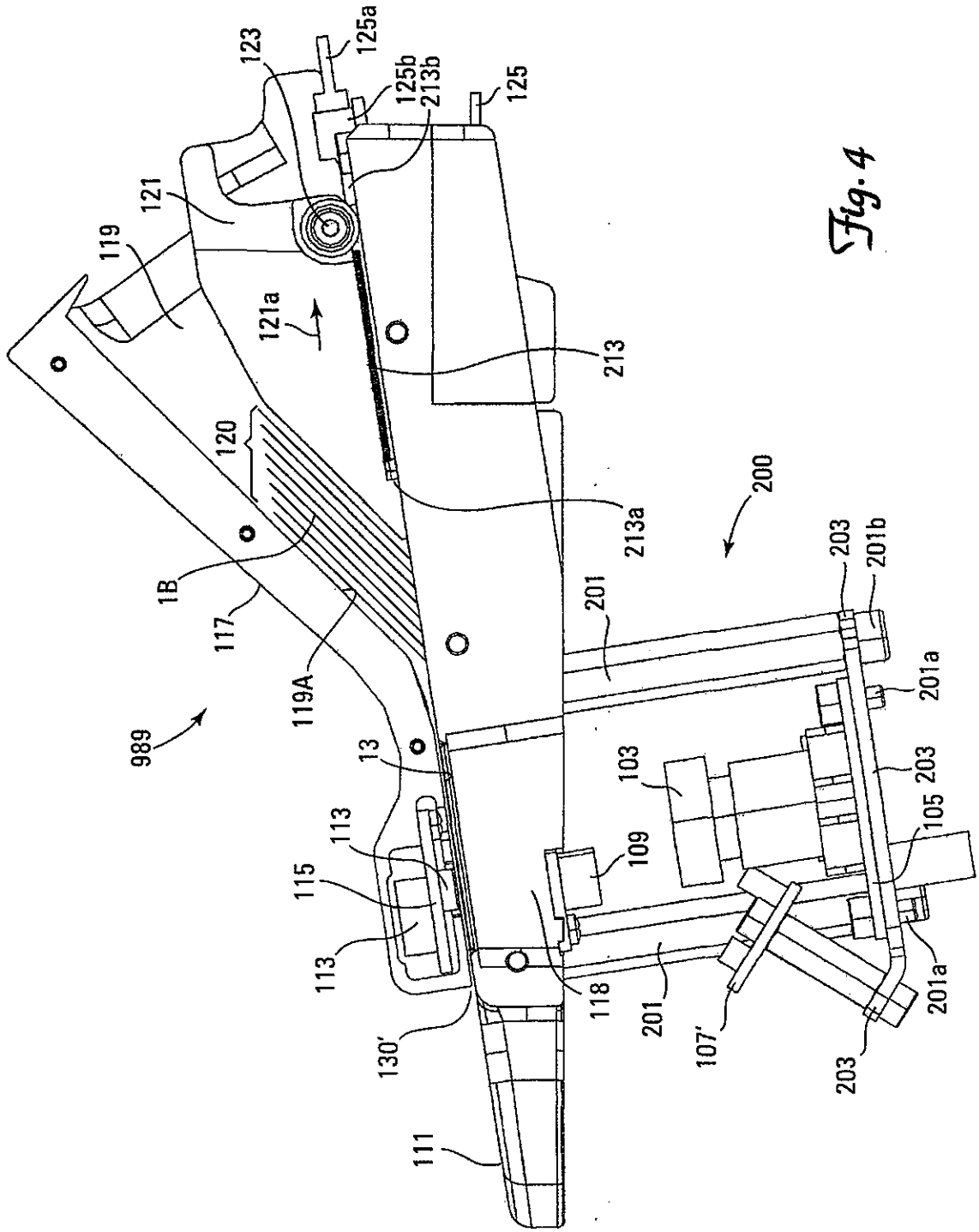
123
125a
125b
213b
125
121
119
121a
213
120
213a
200
1B
117
119A
201
203
201b
201a
989
13
103
203
105
113
115
109
113
118
201
107'
201a
130'
203
111

Fig. 4

Fig. 5A

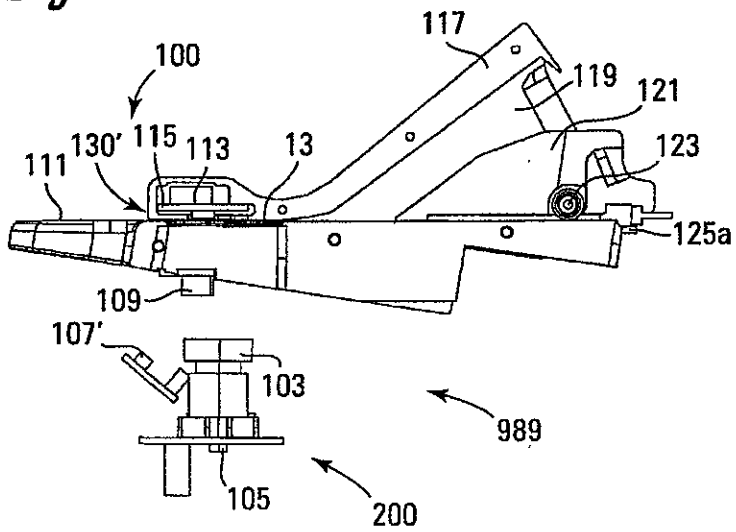
117
100
119
121
130'
115
113
13
123
111
125a
109
107'
103
989
105
200

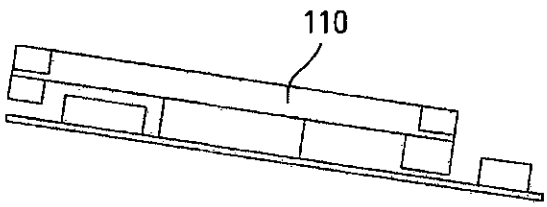
110

Fig. 5B

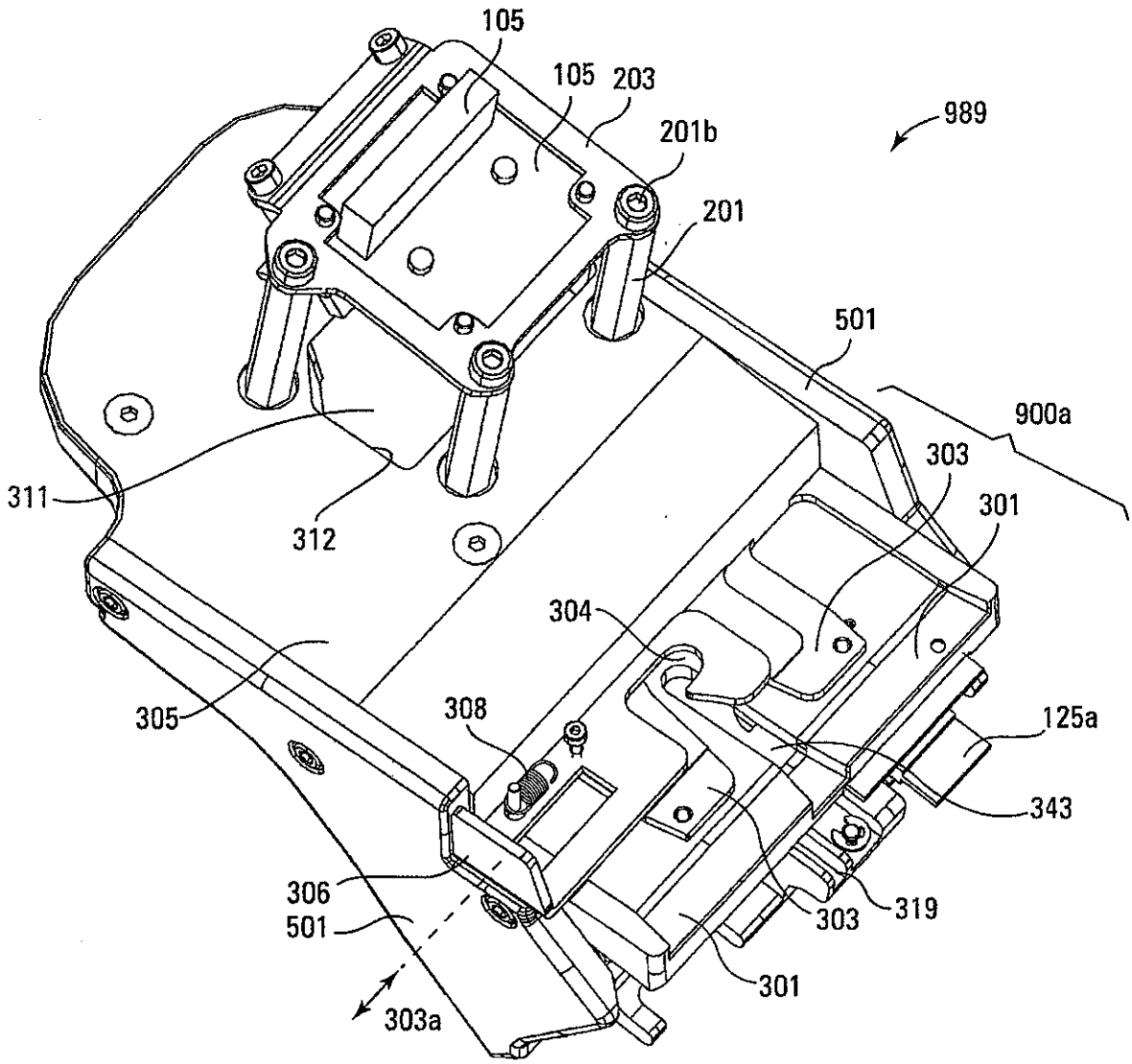
105
105
203
201b
989
201
501
900a
303
301
311
312
304
305
308
125a
343
306
501
303
319
301
303a

Fig. 6

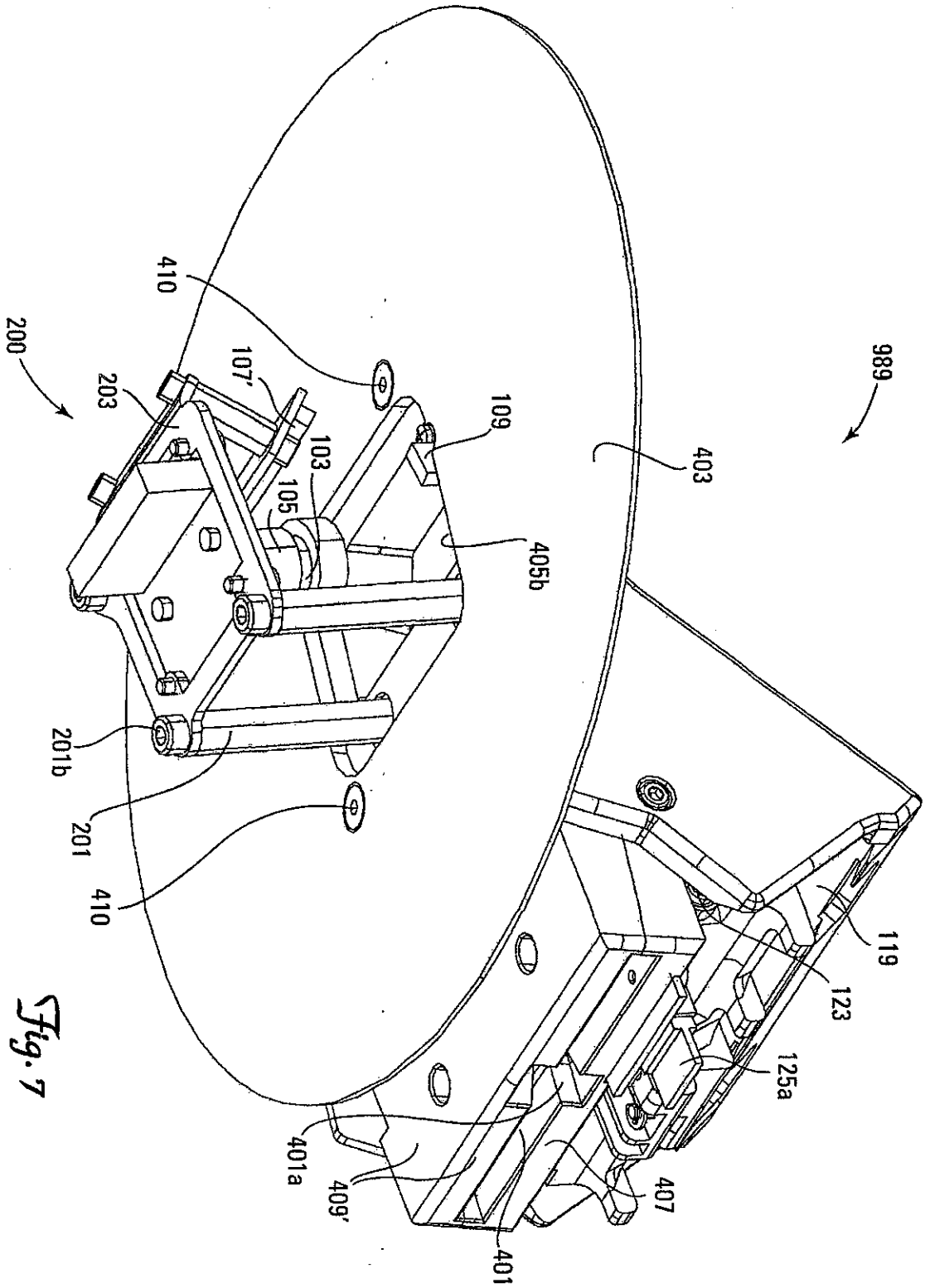
200
410
107'
203
109
103
105
405b
403
989
201b
201
410
119
123
125a
401a
409'
407
401

Fig. 7

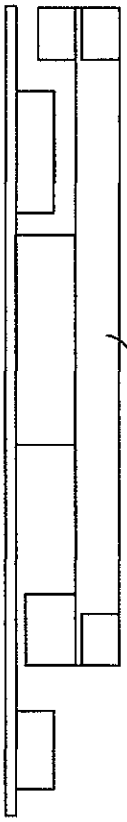
110

Fig. 8B

989
501
505
13
507
200
105
104
103
200
130
111
503
503a
503b
501

Fig. 8A

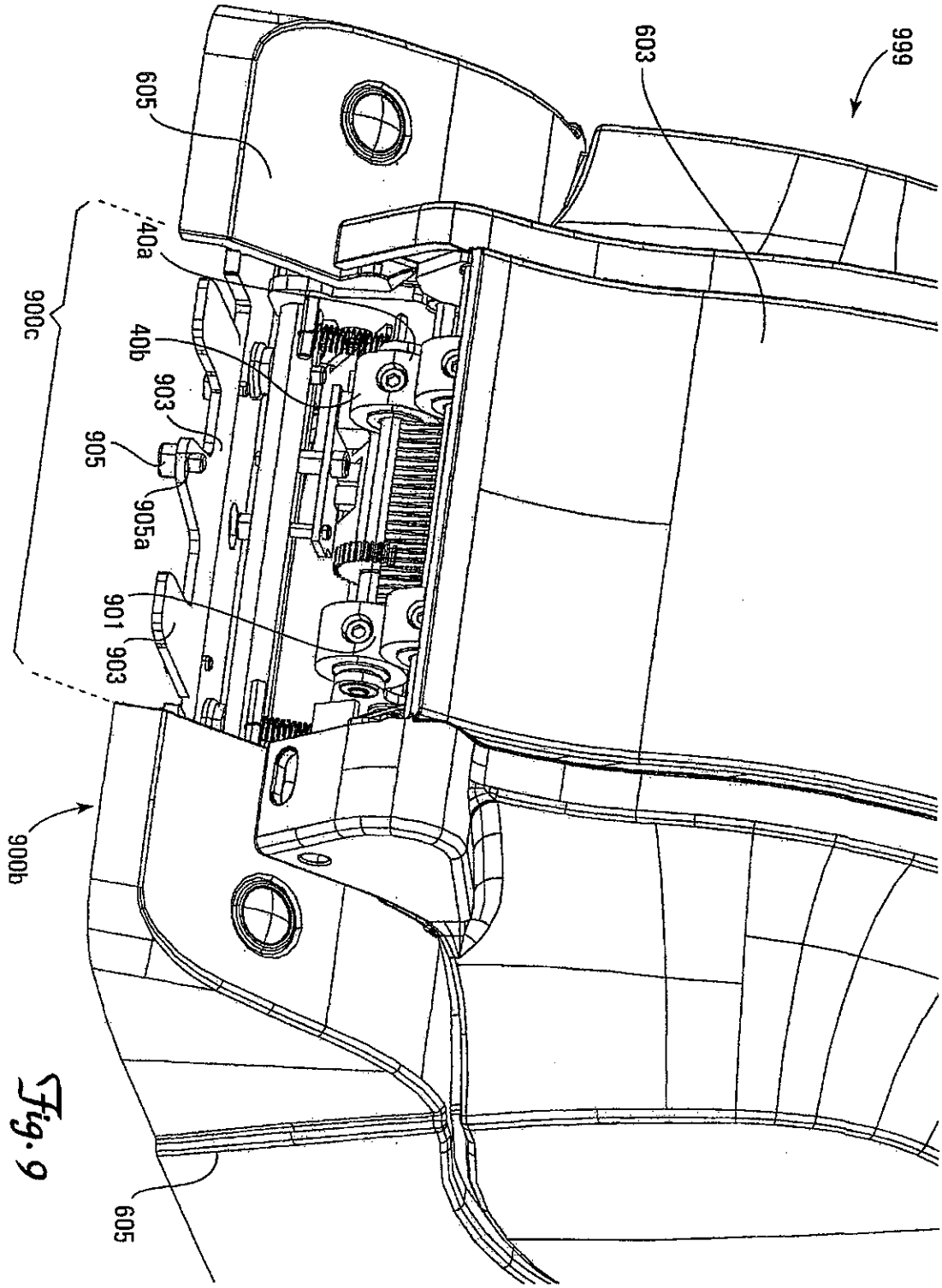

Fig. 9

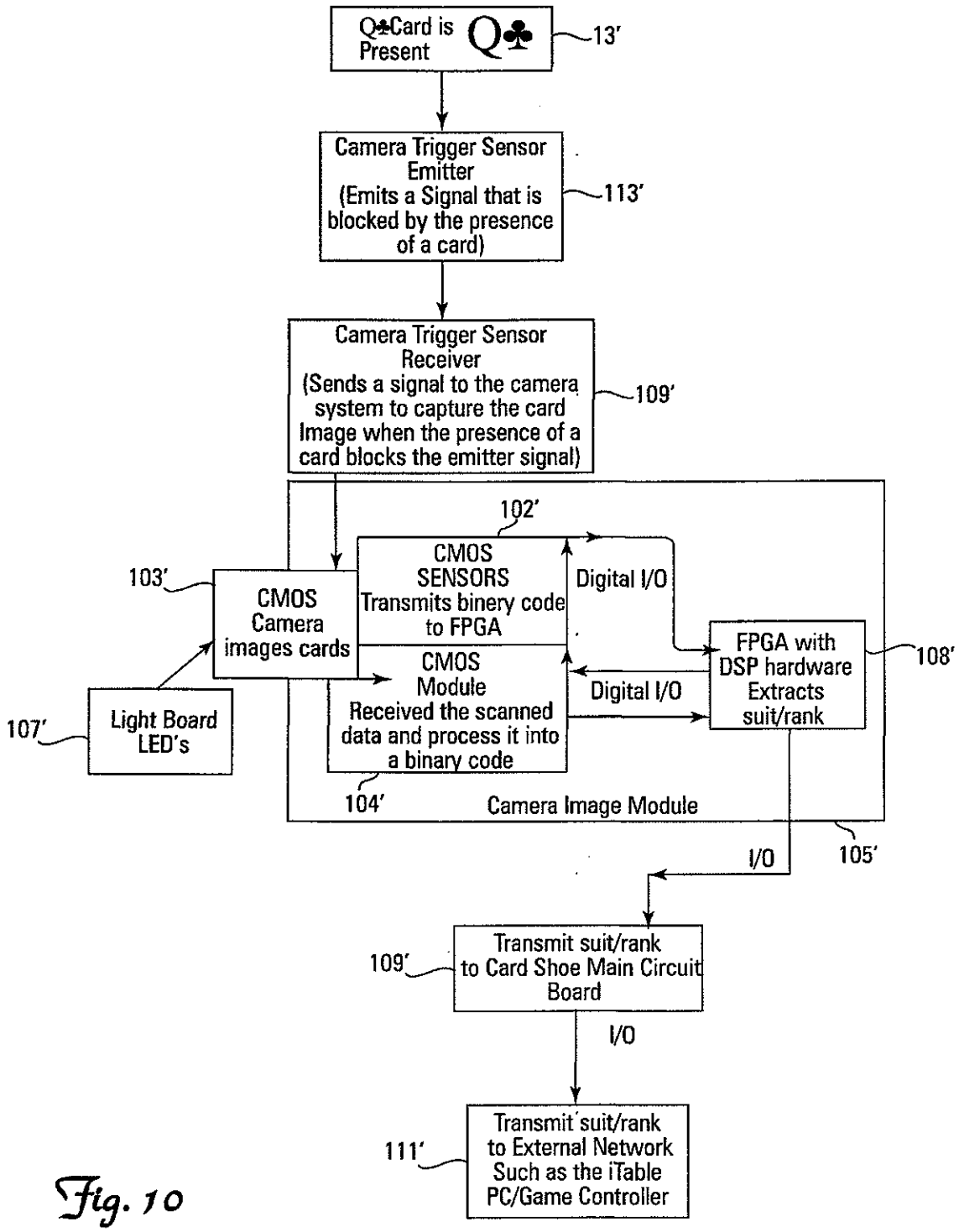
Q♣Card is Present
13'
Camera Trigger Sensor Emitter (Emits a Signal that is blocked by the presence of a card)
113'
Camera Trigger Sensor Receiver (Sends a signal to the camera system to capture the card Image when the presence of a card blocks the emitter signal)
109'
102'
CMOS SENSORS Transmits binery code to FPGA
Digital I/O
103'
CMOS Camera images cards
FPGA with DSP hardware Extracts suit/rank
108'
CMOS Module Received the scanned data and process it into a binary code
Digital I/O
107'
Light Board LED's
104'
Camera Image Module
I/O
105'
Transmit suit/rank to Card Shoe Main Circuit Board
109'
I/O
Transmit suit/rank to External Network Such as the iTable PC/Game Controller
111'

Fig. 10

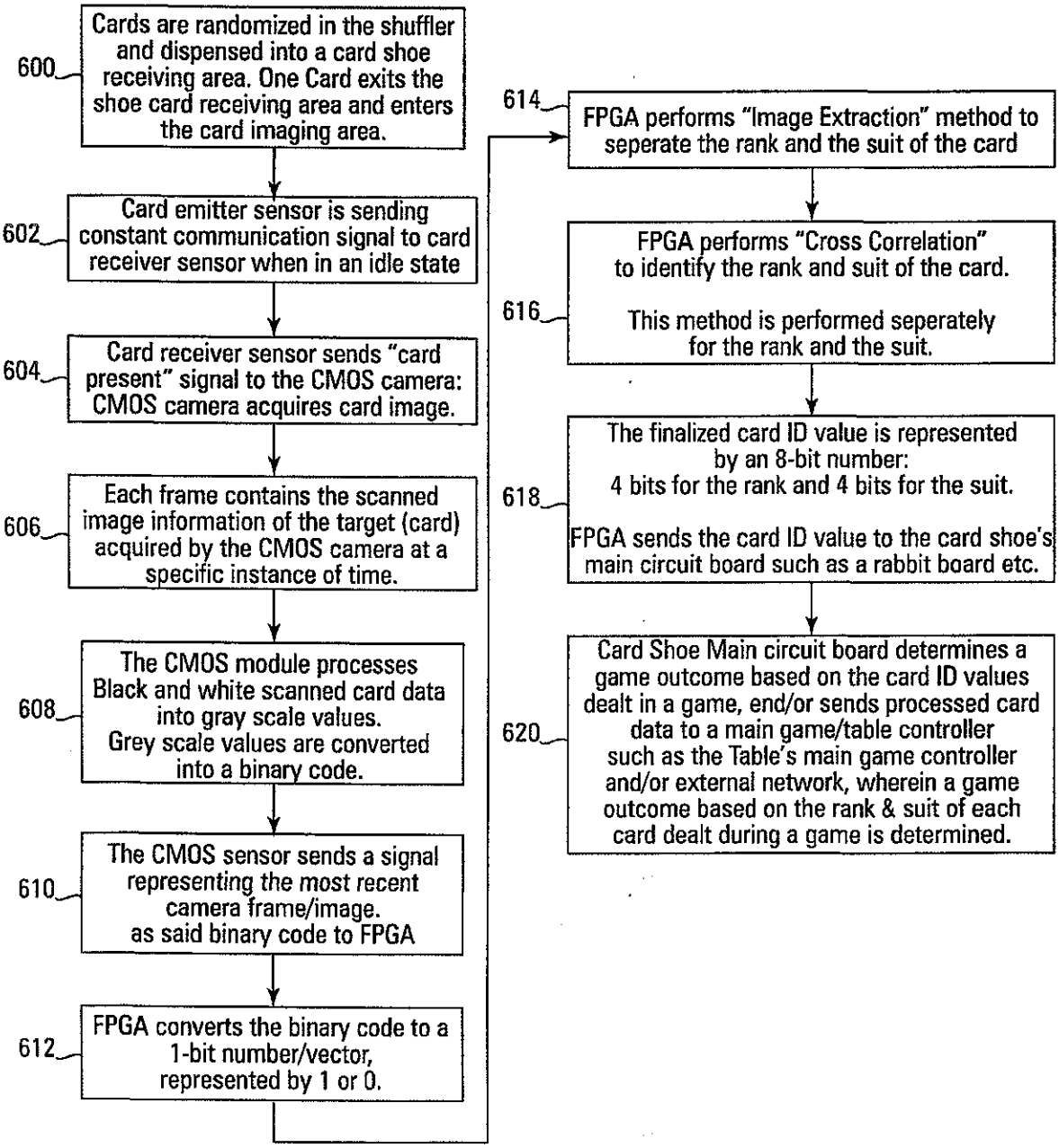
600
Cards are randomized in the shuffler and dispensed into a card shoe receiving area. One Card exits the shoe card receiving area and enters the card imaging area.
602
Card emitter sensor is sending constant communication signal to card receiver sensor when in an idle state
604
Card receiver sensor sends "card present" signal to the CMOS camera: CMOS camera acquires card image.
606
Each frame contains the scanned image information of the target (card) acquired by the CMOS camera at a specific instance of time.
608
The CMOS module processes Black and white scanned card data into gray scale values. Grey scale values are converted into a binary code.
610
The CMOS sensor sends a signal representing the most recent camera frame/image. as said binary code to FPGA
612
FPGA converts the binary code to a 1-bit number/vector, represented by 1 or 0.
614
FPGA performs "Image Extraction" method to seperate the rank and the suit of the card
616
FPGA performs "Cross Correlation" to identify the rank and suit of the card.
This method is performed seperately for the rank and the suit.
618
The finalized card ID value is represented by an 8-bit number: 4 bits for the rank and 4 bits for the suit.
FPGA sends the card ID value to the card shoe's main circuit board such as a rabbit board etc.
620
Card Shoe Main circuit board determines a game outcome based on the card ID values dealt in a game, end/or sends processed card data to a main game/table controller such as the Table's main game controller and/or external network, wherein a game outcome based on the rank & suit of each card dealt during a game is determined.

Fig. 11

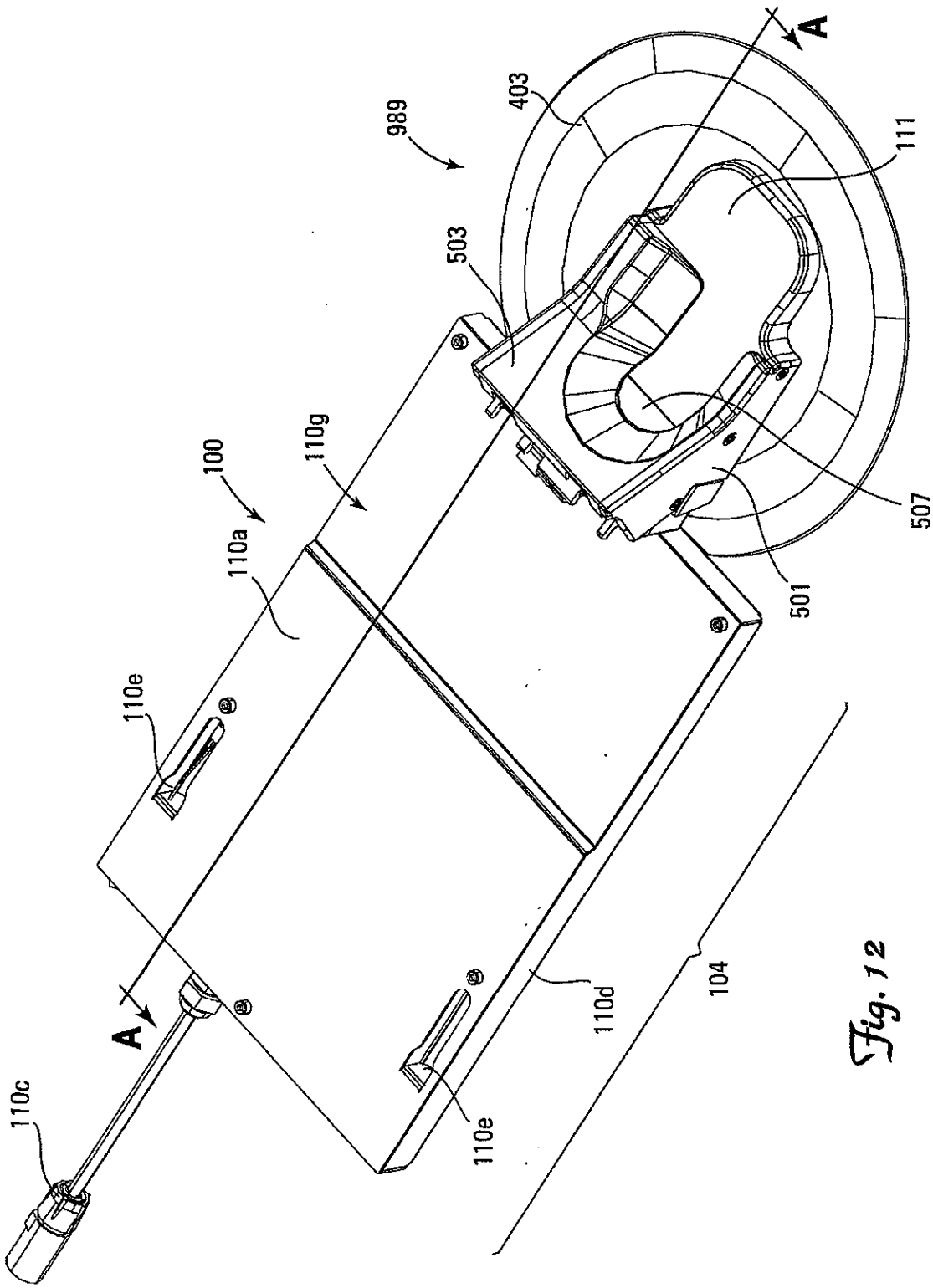
989
403
A
111
503
100
110g
110a
507
501
110e
A
110c
110d
104
110e

Fig. 12

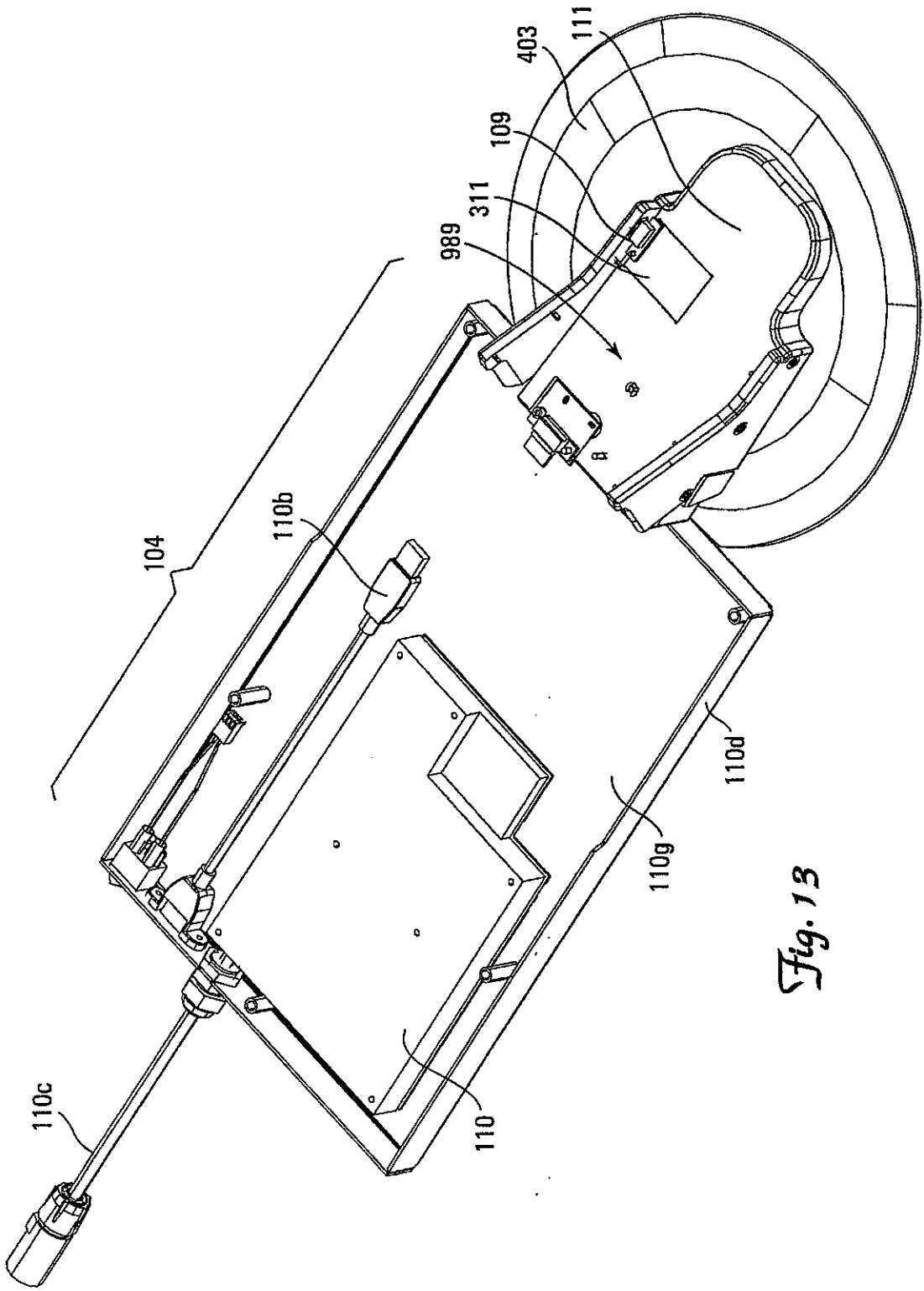

Fig. 13

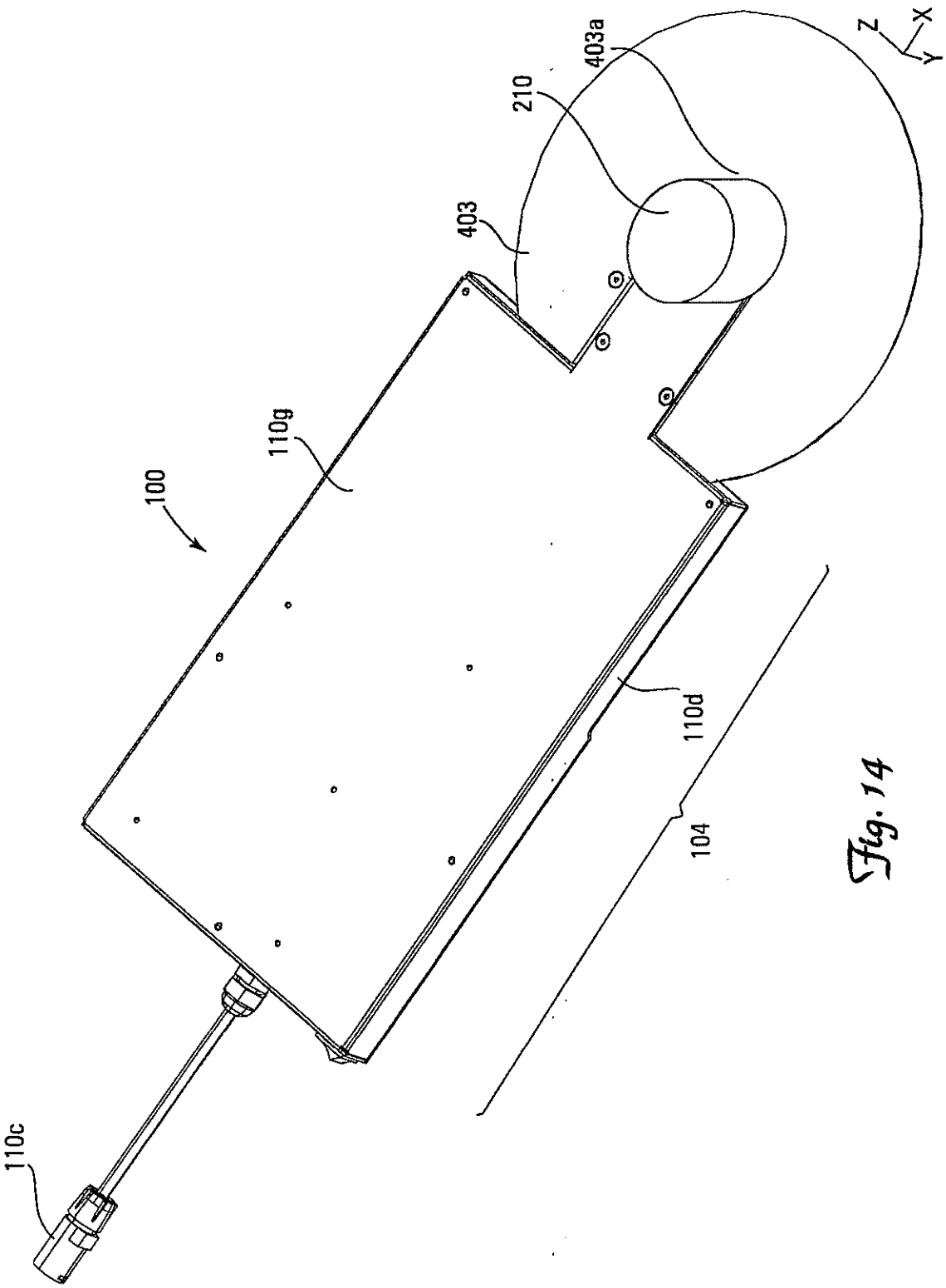

Fig. 14

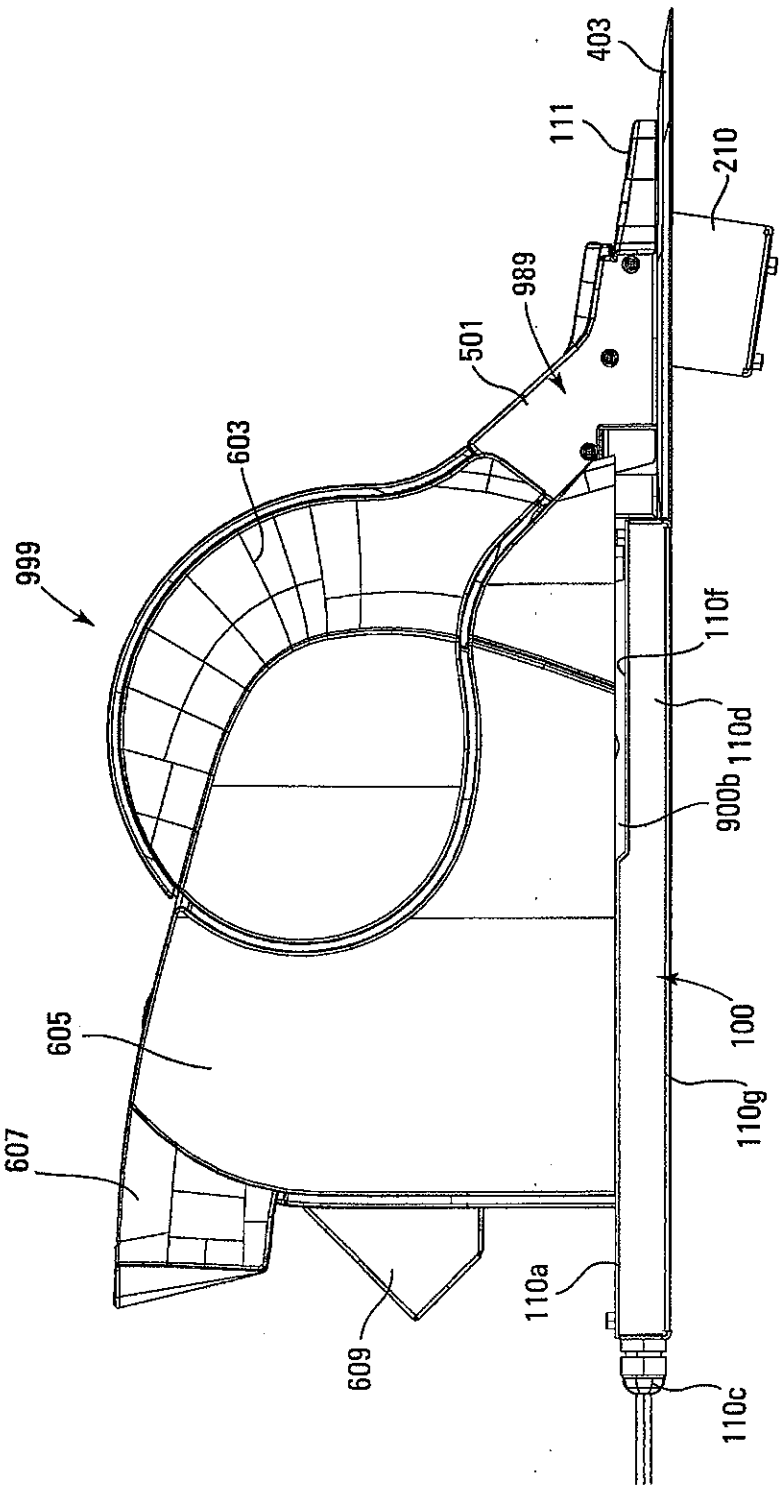
403
111
210
989
501
603
999
110f
110d
900b
100
110g
605
607
609
110a
110c

Fig. 15

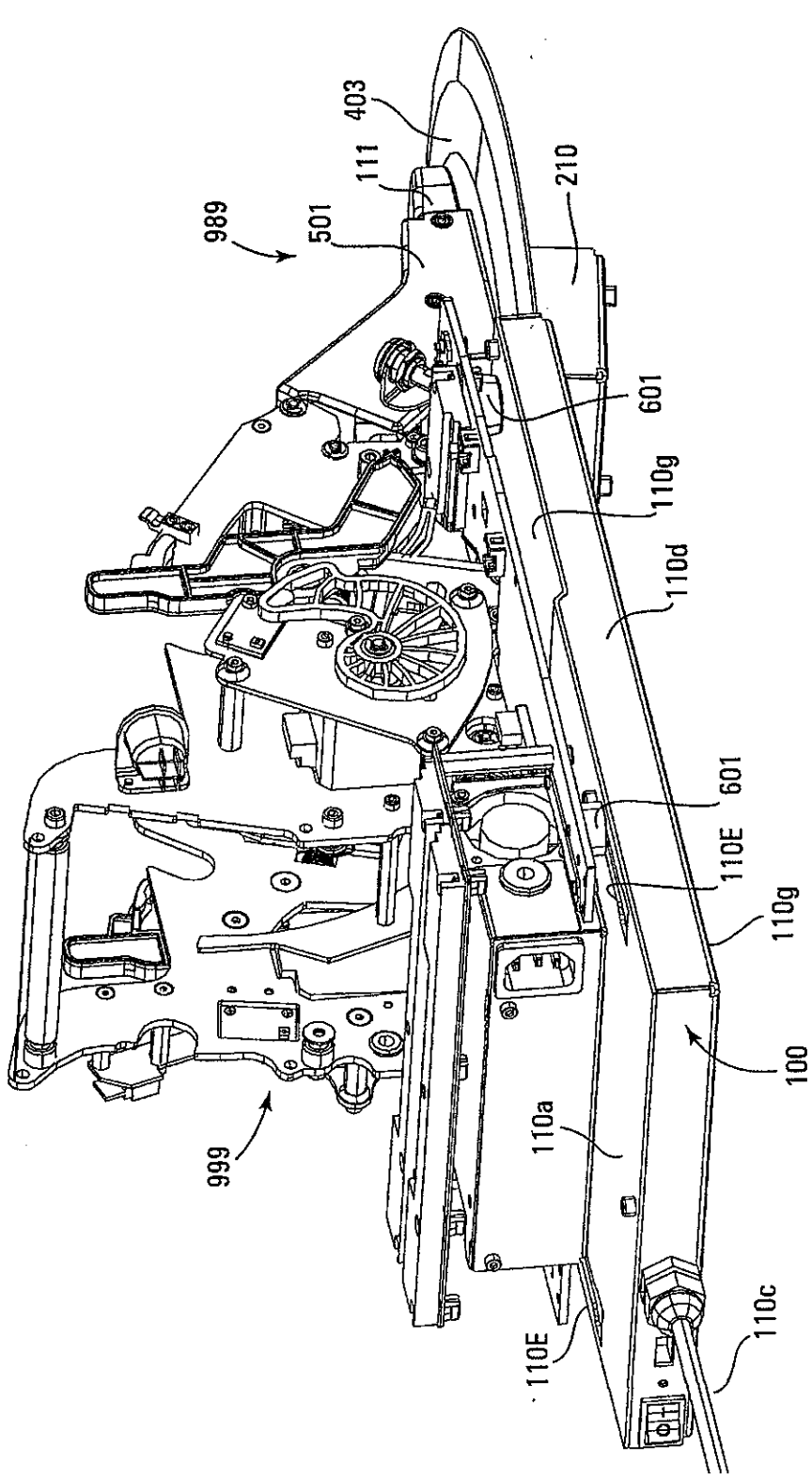
403
111
210
989
501
601
110g
110d
601
110E
110g
100
110a
110E
110c
999
Y
X
Z

Fig. 16

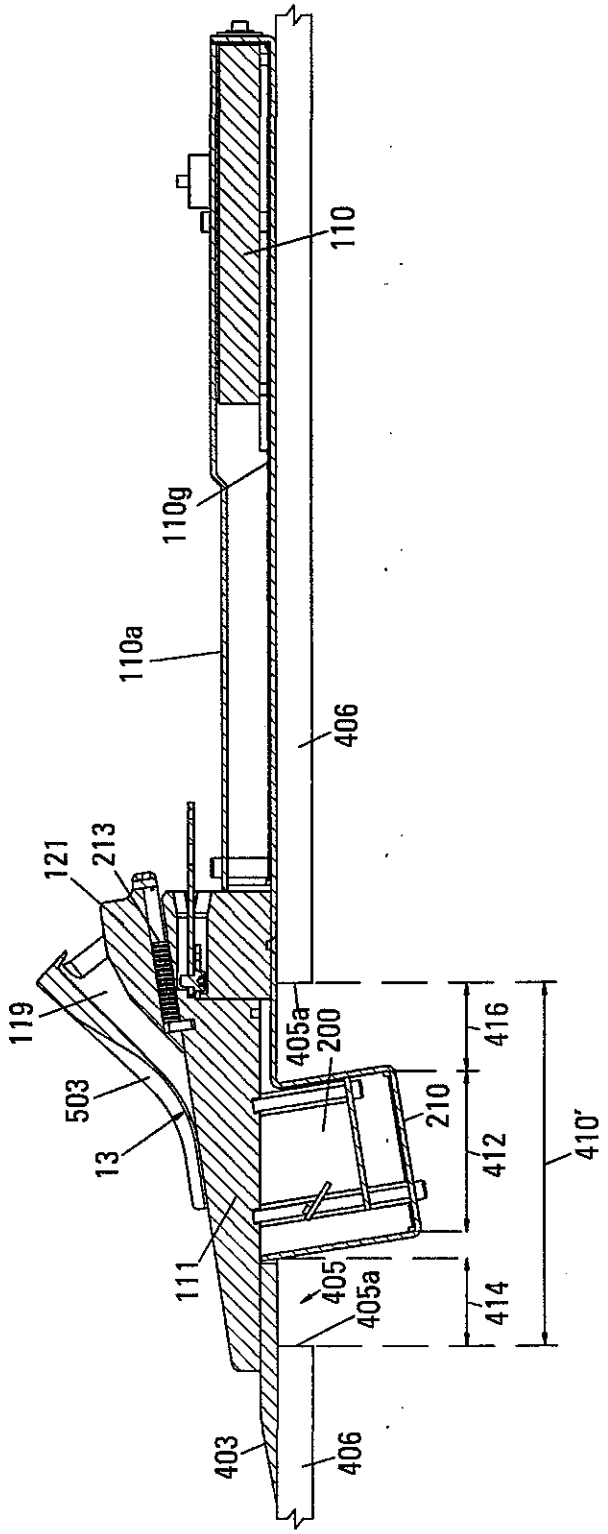
110
110g
110a
406
121
213
119
503
13
111
405a
200
210
405
405a
403
406
416
412
414
410'

Fig. 17

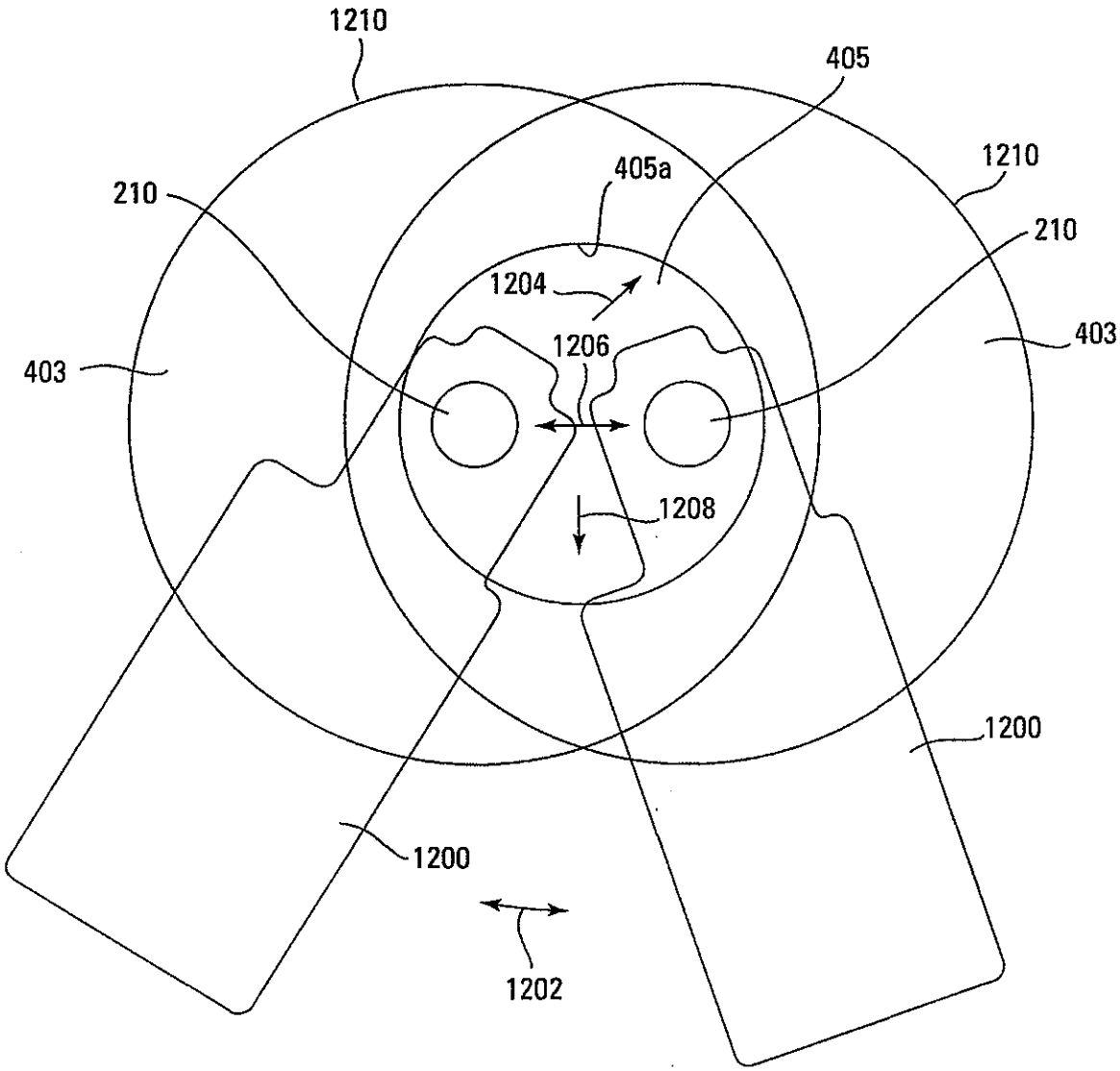
1210
405
405a
1210
210
210
1204
1206
403
403
1208
1200
1200
1202

Fig. 18