9706195-6
IPDS copy

**PCT** WORLD INTELLECTUAL PROPERTY ORGANIZATION
International Bureau

INTERNATIONAL APPLICATION PUBLISHED UNDER THE PATENT COOPERATION TREATY (PCT)

(51) International Patent Classification 6 :
F23G 7/06, F23J 15/04, F01K 25/14, B01D 53/86, 53/75, C07C 63/26, 51/265

A1

(11) International Publication Number: WO 96/39595

(43) International Publication Date: 12 December 1996 (12.12.96)

(21) International Application Number: PCT/GB96/01261

(22) International Filing Date: 28 May 1996 (28.05.96)

(30) Priority Data:

| | | |
|---|---|---|
| 9511275.1 | 5 June 1995 (05.06.95) | GB |
| 9601493.1 | 25 January 1996 (25.01.96) | GB |
| 9602050.8 | 1 February 1996 (01.02.96) | GB |
| 9602458.3 | 7 February 1996 (07.02.96) | GB |

(81) Designated States: AL, AM, AT, AU, AZ, BB, BG, BR, BY, CA, CH, CN, CZ, DE, DK, EE, ES, FI, GB, GE, HU, IS, JP, KE, KG, KP, KR, KZ, LK, LR, LS, LT, LU, LV, MD, MG, MK, MN, MW, MX, NO, NZ, PL, PT, RO, RU, SD, SE, SG, SI, SK, TJ, TM, TR, TT, UA, UG, US, UZ, VN, ARIPO patent (KE, LS, MW, SD, SZ, UG), Eurasian patent (AM, AZ, BY, KG, KZ, MD, RU, TJ, TM), European patent (AT, BE, CH, DE, DK, ES, FI, FR, GB, GR, IE, IT, LU, MC, NL, PT, SE), OAPI patent (BF, BJ, CF, CG, CI, CM, GA, GN, ML, MR, NE, SN, TD, TG).

Published
*With international search report.*

(71) Applicant *(for all designated States except US)*: IMPERIAL CHEMICAL INDUSTRIES PLC [GB/GB]; Imperial Chemical House, Millbank, London SW1P 3JF (GB).

(72) Inventors; and
(75) Inventors/Applicants *(for US only)*: TURNER, John, Arthur [GB/GB]; Highbeck, 117 Guildford Road, Normanby, Middlesbrough TS6 0SW (GB). JEFFERY, Ian, Charles [GB/GB]; 5 Sandmartin Lane, Norton, Cleveland TS20 1LP (GB).

(74) Agents: COLLINGWOOD, Anthony, Robert et al.; ICI Chemicals & Polymers Limited, Intellectual Property Dept., The Heath, P.O. Box 11, Runcorn, Cheshire WA7 4QE (GB).

(54) Title: EFFLUENT GAS TREATMENT

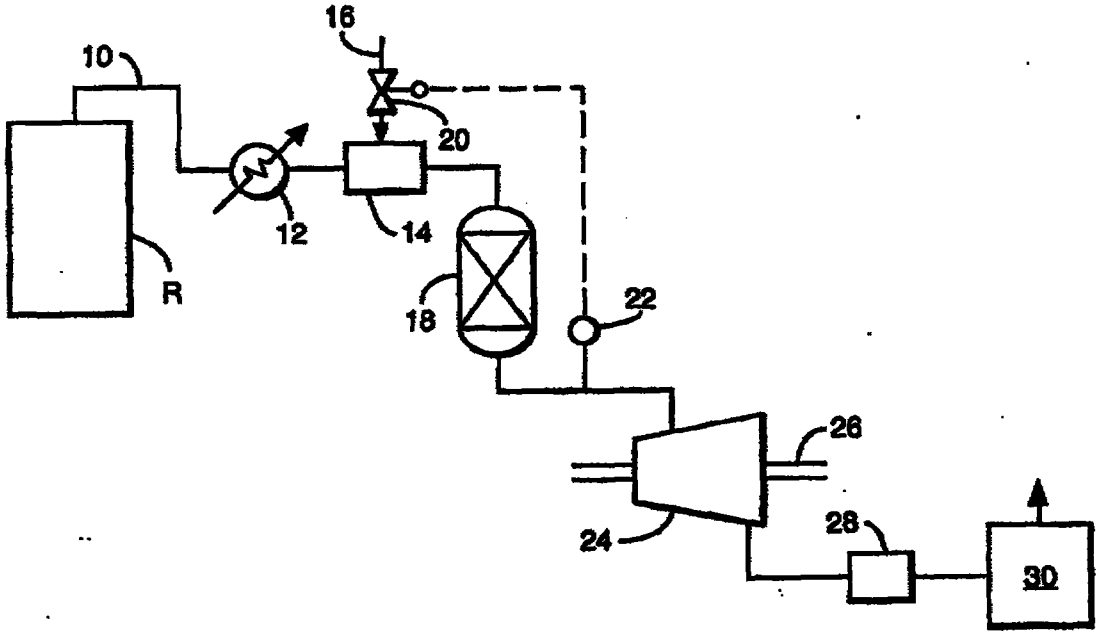


(57) Abstract

An effluent gas (10) derived from the production (R) of an aromatic dicarboxylic acid such as terephthalic acid is subjected to catalytic combustion (18) to effect complete conversion of any methyl bromide content to HBr and/or $Br_2$ and the resulting gas stream is passed to an energy conversion device such as a gas turbine (24) under controlled conditions of pressure and temperature whereby condensation of HBr and/or $Br_2$ is substantially prevented thereby allowing the energy conversion device to be fabricated from relatively inexpensive materials.