(12) INTERNATIONAL APPLICATION PUBLISHED UNDER THE PATENT COOPERATION TREATY (PCT)

(19) World Intellectual Property Organization
International Bureau

(43) International Publication Date
3 April 2003 (03.04.2003)

PCT

(10) International Publication Number
WO 03/026630 A1

(51) International Patent Classification[7]: A61K 9/28

(21) International Application Number: PCT/US02/31129

(22) International Filing Date:
28 September 2002 (28.09.2002)

(25) Filing Language: English

(26) Publication Language: English

(30) Priority Data:

09/966,939	28 September 2001 (28.09.2001)	US
09/966,509	28 September 2001 (28.09.2001)	US
09/966,497	28 September 2001 (28.09.2001)	US
09/967,414	28 September 2001 (28.09.2001)	US
09/966,450	28 September 2001 (28.09.2001)	US

(71) Applicant *(for all designated States except US)*: **MCNEIL-PPC, INC.** [US/US]; Grandview Road, Skillman, NJ 08558 (US).

(72) Inventors; and

(75) Inventors/Applicants *(for US only)*: **BUNICK, Frank, J.** [US/US]; 750 E. Cherry Road, Quakertown, PA 18951 (US). **LEE, Der-Yang** [US/US]; 10 Kentworth Court, Flemington, NJ 08822 (US). **MCNALLY, Gerard, P.** [US/US]; 177 Coldstream Drive, Berwyn, PA 19312 (US). **THOMAS, Martin** [US/GB]; 7401 Trescott Drive, Lake Worth, FL 33467 (US). **SOWDEN, Harry, S.** [US/US]; 209 Woods Road, Glenside, PA 19038 (US).

(74) Agents: **JOHNSON, Philip, S.** et al.; Johnson & Johnson, One Johnson & Johnson Plaza, New Brunswick, NJ 08903 (US).

(81) Designated States *(national)*: AE, AG, AL, AM, AT, AU, AZ, BA, BB, BG, BR, BY, BZ, CA, CH, CN, CO, CR, CU, CZ, DE, DK, DM, DZ, EC, EE, ES, FI, GB, GD, GE, GH, GM, HR, HU, ID, IL, IN, IS, JP, KE, KG, KP, KR, KZ, LC, LK, LR, LS, LT, LU, LV, MA, MD, MG, MK, MN, MW, MX, MZ, NO, NZ, OM, PH, PL, PT, RO, RU, SD, SE, SG, SI, SK, SL, TJ, TM, TN, TR, TT, TZ, UA, UG, US, UZ, VC, VN, YU, ZA, ZM, ZW.

(84) Designated States *(regional)*: ARIPO patent (GH, GM, KE, LS, MW, MZ, SD, SL, SZ, TZ, UG, ZM, ZW), Eurasian patent (AM, AZ, BY, KG, KZ, MD, RU, TJ, TM), European patent (AT, BE, BG, CH, CY, CZ, DE, DK, EE, ES, FI, FR, GB, GR, IE, IT, LU, MC, NL, PT, SE, SK,

[Continued on next page]

(54) Title: DOSAGE FORMS HAVING AN INNER CORE AND OUTER SHELL WITH DIFFERENT SHAPES

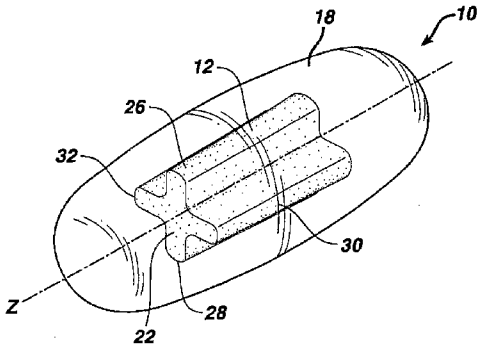

(57) Abstract: A dosage form comprises an active ingredient, a core having an outer surface and a first shape and a shell having outer and inner surfaces and a second shape, in which the shell surrounds at least a portion of the core, and the first and second shapes are substantially different. In one embodiment the shell comprises at least about 80% of a flowable material selected from the group consisting of film formers, gelling polymers, thermoplastic materials, low melting hydrophobic materials, non-crystallizable sugars, non-crystallizable sugar-alcohols, and mixtures thereof. In another embodiment the shell is substantially free of pores having a diameter of 0.5 to 5.0 microns. In another embodiment, the core and shell each having a different number of planes of symmetry with respect to the same reference axis. In another embodiment, the distance from the core outer surface to the shell outer surface is different at two different points located on the core outer surface and the difference is greater than about 125 microns. Either the core, the shell, or a combination thereof may contain at least one active ingredient. The core and shell may each be molded or compressed. The core may also comprise an insert which may contain at least one active ingredient. The shape of the core may be chosen so as to permit modified release of active material in the core upon breach of the shell or provides a modified release profile for the active material in the core.

WO 03/026630 A1

TR), OAPI patent (BF, BJ, CF, CG, CI, CM, GA, GN, GQ, GW, ML, MR, NE, SN, TD, TG).

Published:

— *with international search report*

— *before the expiration of the time limit for amending the claims and to be republished in the event of receipt of amendments*

For two-letter codes and other abbreviations, refer to the "Guidance Notes on Codes and Abbreviations" appearing at the beginning of each regular issue of the PCT Gazette.